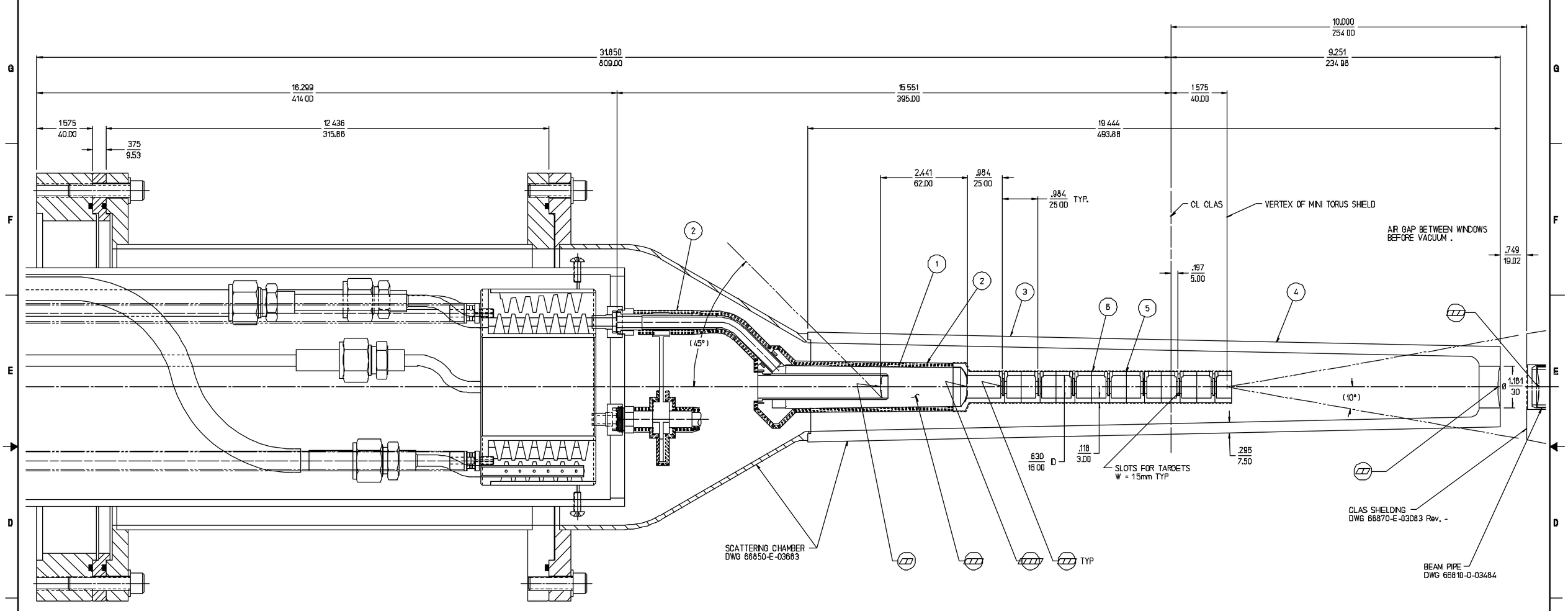

TARGETS & INSULATION
g7 RUN (FALL 2002)

TABLE –A–
MISCELLANEOUS MATERIALS & THERMAL INSULATION

ITEM	MATERIAL
1	CELL DWG 66850-A-03648
2	5 LAYERS OF SUPER-INSULATION EACH w/ 1 PLY CEREX
3	.295" (7.50 mm) FOAM CHAMBER DWG 66850-E-03683 (83mg/cm^2)
4	SAFETY SOCK (LEGGS #J504XS ~ SIZE 4XS) (4mg/cm^2)
5	3mm FOAM SUPPORTING SOLID TARGETS (9mg/cm^2)
6	1 LAYER OF ALUMINIZED MYLAR

TABLE –A–
MATERIALS IN THE BEAM LINE

ITEM	DESCRIPTION	"Z" LOCATION (cm)	MATERIAL	THICKNESS (cm)	DIAMETER (cm)	AREA DENSITY (g/cm^2)
▭	TARGET CELL INLET WINDOW	-20.7	KAPTON ALUMINUM	127 microns 15 microns	1.6 0.5	—
▭▭	TARGET LIQUID	-17.6	D_2	6.20	2.8	—
▭▭	TARGET CELL EXIT WINDOW	-14.5	KAPTON ALUMINUM	127 microns 15 microns	2.8 0.5	—
▭▭	SOLID TARGETS	-12.0	C	1.0(R)/0.5(F)	1.20	.220
		-9.5	Fe	0.5/0.1	1.20	.471
		-7.0	C	1.0(R)/0.5(F)	1.20	.220
		-4.5	Pb	1.0	1.20	1.094
		-2.0	C	1.0(R)/0.5(F)	1.20	.220
		0.5	Ti	1.0	1.20	.462
		3.0	C	1.0(R)/0.5(F)	1.20	.220
▭	SCATTERING CHAMBER EXIT WINDOW	23.3	ALUMINUM	71 microns	3.00	—
▭▭	BEAM PIPE WINDOW	25.8	ALUMINUM	71 microns	2.5	—

TABLE –C–

MATERIAL	DENSITY ▭▭
SUPER-INSULATION (ALUMINIZED MYLAR)	▭ .88 mg/cm^2/Layer
SUPER-INSULATION (CEREX)	▭ 1.0 mg/cm^2/Layer/Pty

REVISION HISTORY

ZONE	REV	DESCRIPTION	DATE	APPROVED

DOCUMENT CONTROL STAMP

MATERIAL: N/A

FINISH MACHINED SURFACES N/A UNLESS OTHERWISE NOTED
DEBURR & BREAK ALL SHARP EDGES

DO NOT SCALE DRAWING

DIM & TOL PER ASME Y14.5 UNLESS OTHERWISE SPECIFIED
DIMENSIONS ARE IN INCHES
TOLERANCES ARE:
FRACTIONS ± N/A DECIMAL X ± N/A XX ± N/A XXX ± N/A ANGLES ± N/A

THIRD ANGLE PROJECTION

TRACKING NO /Wbs/6/zarecky/66000 /3600/66840e03662_02

APPROVALS	DATE
DRAWN M. ZARECKY	7/10/02
CHECKED D. KASHY	8/30/02
APPROVED D. KASHY	8/30/02
APPROVED D. KASHY	8/30/02

Thomas Jefferson National Accelerator Facility
Jefferson Science Associates, LLC
Under a Contract with the U.S. Department of Energy

HALL B
CLAS BEAM LINE ASSEMBLY
FROM TAGGER MAGNET THRU FWD CARRIAGE
FOR g7 RUN (FALL 2002)

SIZE E | DWG NO 66840-E-03662 | REV. -
SCALE 1/1 | REDO NAME - | SHEET 2 OF 3