8 GeV Multi- Mission Injector Linac

LRP Discussion Points

G. William Foster

1) 8 GeV Linac vs. Design Study Charge

- ✓ **Energy = 8 GeV** assuming ~ TESLA(500) Gradients
  - **12 GeV** Assuming TESLA(800) Gradients
  - Energy upgrades require consideration in RF & transport lines
- ✓ **Main Injector Protons: 1.5×10^{14}** per MI cycle
  - 5x Main Injector Design
  - MI Cycle Times up to 10 Hz Supported
- ✓ **8 GeV Protons**
  - Specified: 3.0×10^{14} /sec (=380 KW)
  - Actual: 15.0×10^{14} /sec (=1.9 MW) ***(e-, e+, or H-)***

➢ ***Meets / Exceeds all Specifications***

8 GeV Linac Parameters

8 GeV LINAC

Energy	GeV	8	
Particle Type	H- Ions, ~~Protons~~, or Electrons		
Rep. Rate	Hz	10	
Active Length	m	671	
Beam Current	mA	25	
Pulse Length	msec	1	
Beam Intensity	P / pulse	1.5E+14	(can be H-, P, or e-)
	P/hour	5.4E+18	
Linac Beam Power	MW avg.	2	
	MW peak	200	

MAIN INJECTOR WITH 8 GeV LINAC

MI Beam Energy	GeV	120	
MI Beam Power	MW	2.0	
MI Cycle Time	sec	1.5	filling time = 1msec
MI Protons/cycle		1.5E+14	5x design
MI Protons/hr	P / hr	3.6E+17	
H-minus Injection	turns	90	SNS = 1060 turns
MI Beam Current	mA	2250	

Main Injector 120 GeV Cycle with Synchrotron Injection

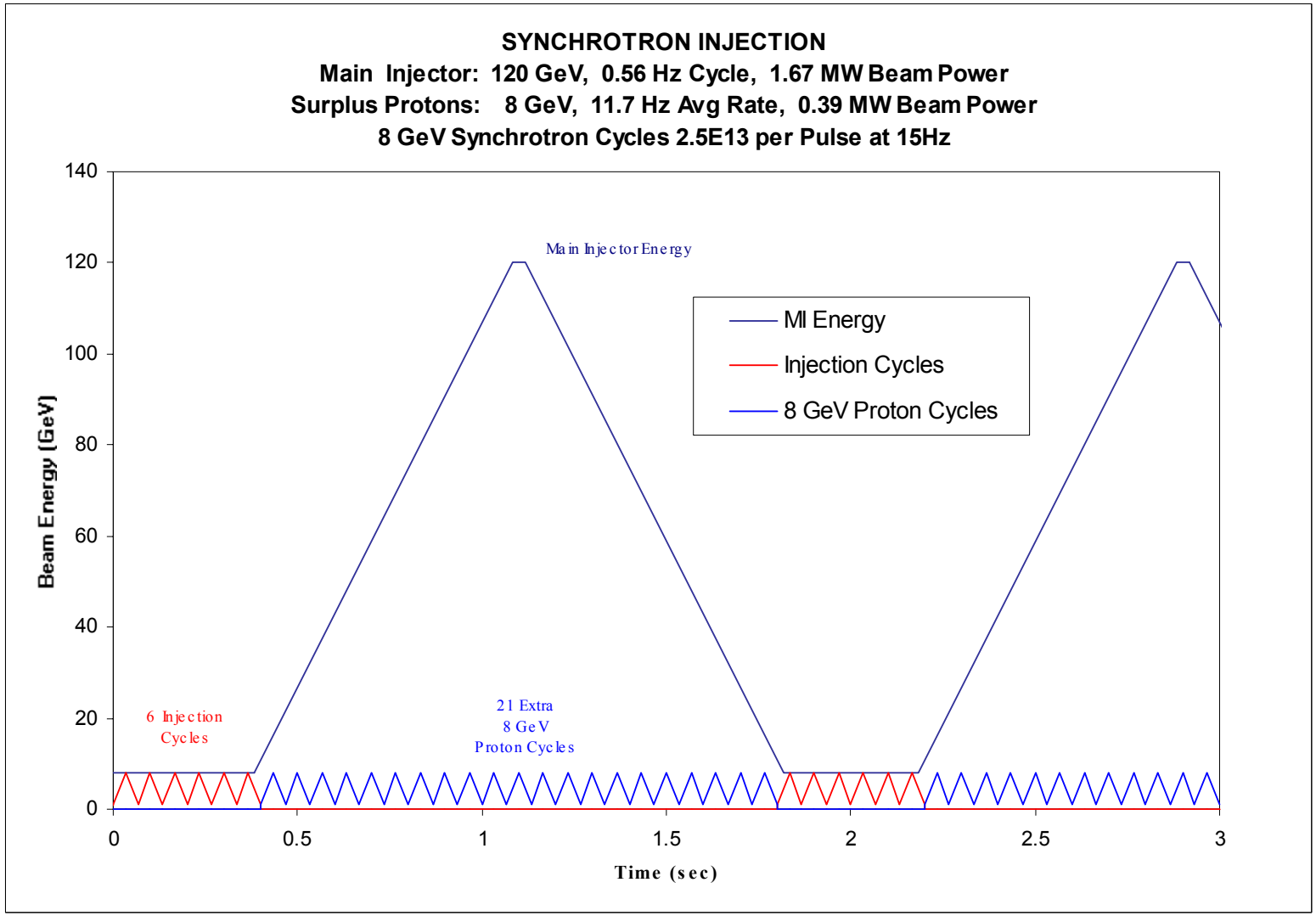

120 GeV Main Injector Cycle with 8 GeV Linac, e- and P

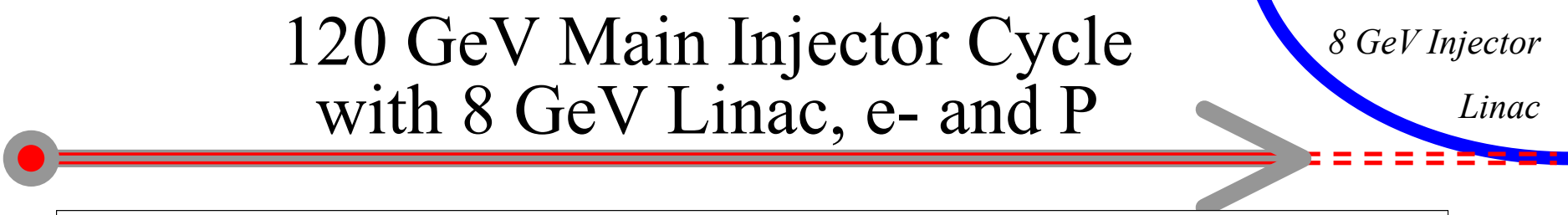

Main Injector: 120 GeV, 0.67 Hz Cycle, 2.0 MW Beam Power
Linac Protons: 8 GeV, 4.67 Hz Cycle, 0.93 MW Beam Power
Linac Electrons: 8 GeV, 4.67 Hz Cycle, 0.93 MW Beam Power
8 GeV Linac Cycles 1.5E14 per Pulse at 10Hz

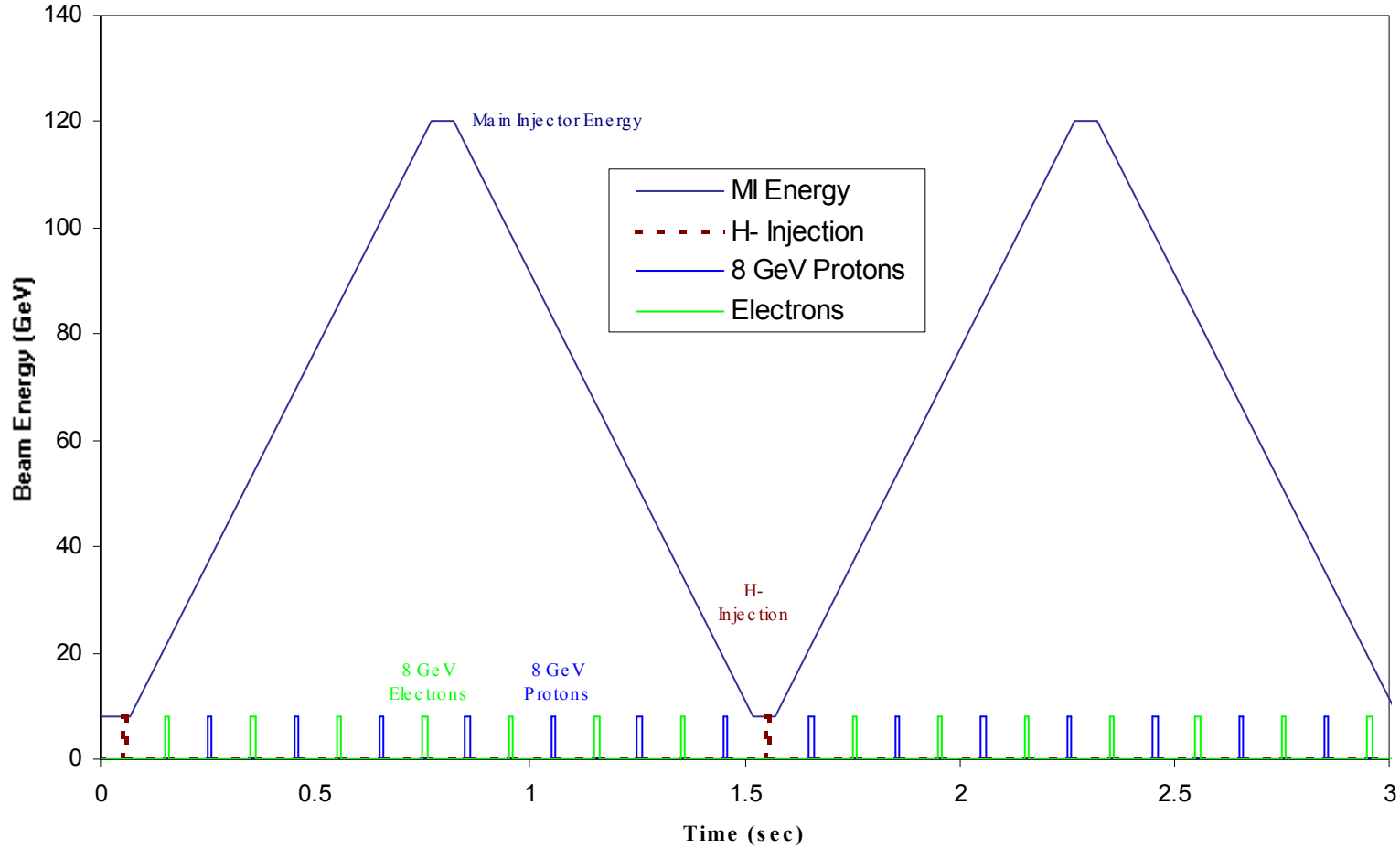

8 GeV Linac Allows Reduced MI Beam Energy without Compromising Beam Power

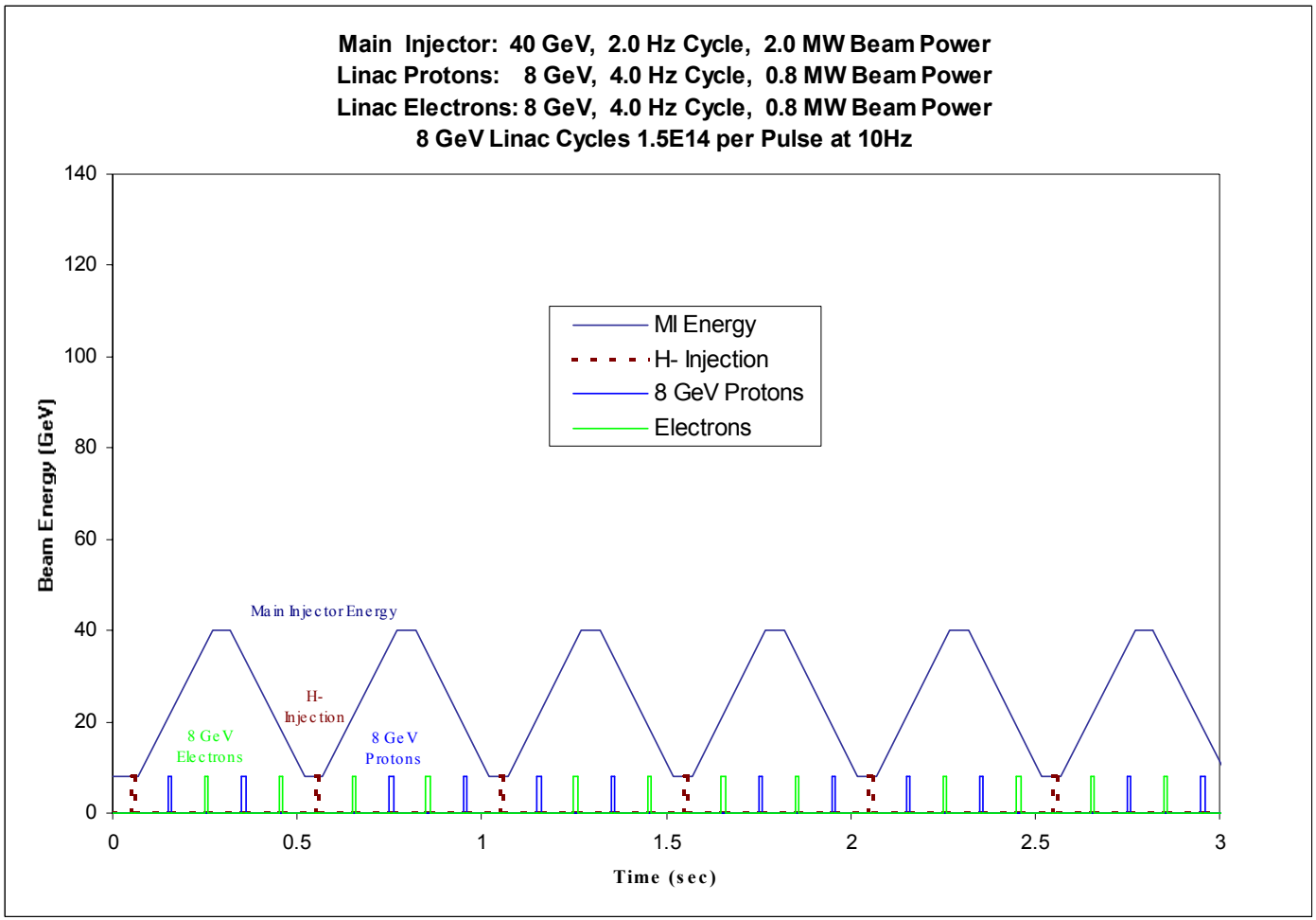

MI cycles to 40 GeV at 2Hz, retains 2 MW MI beam power

8 GeV Linac Cost Estimate

$283M (x 1.3 Contingency) = $369M

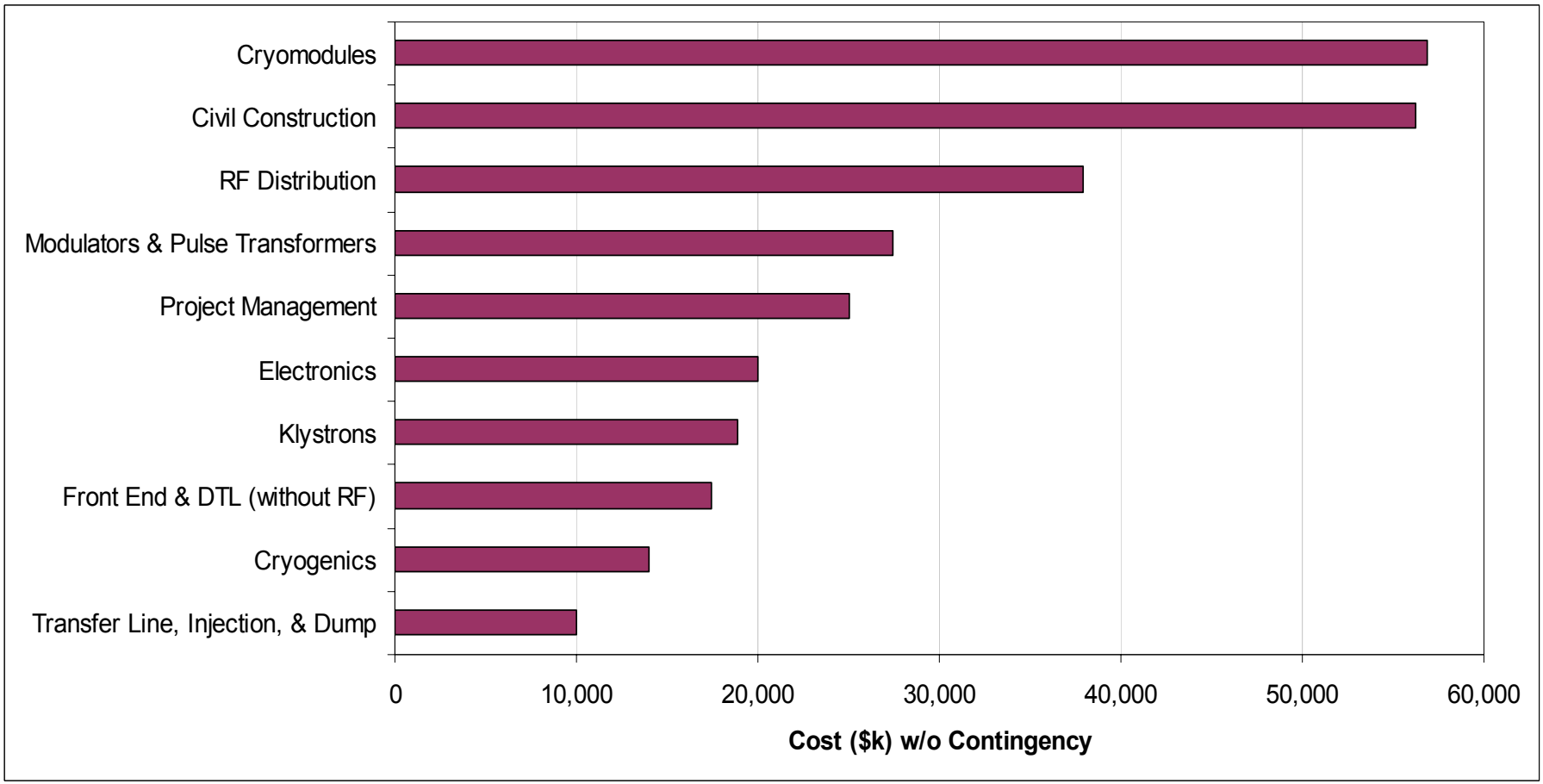

8 GeV RF LAYOUT

41 Klystrons (3 types)
31 Modulators 20 MW ea.
7 Warm Linac Loads
384 Superconducting Cavities
48 Cryomodules

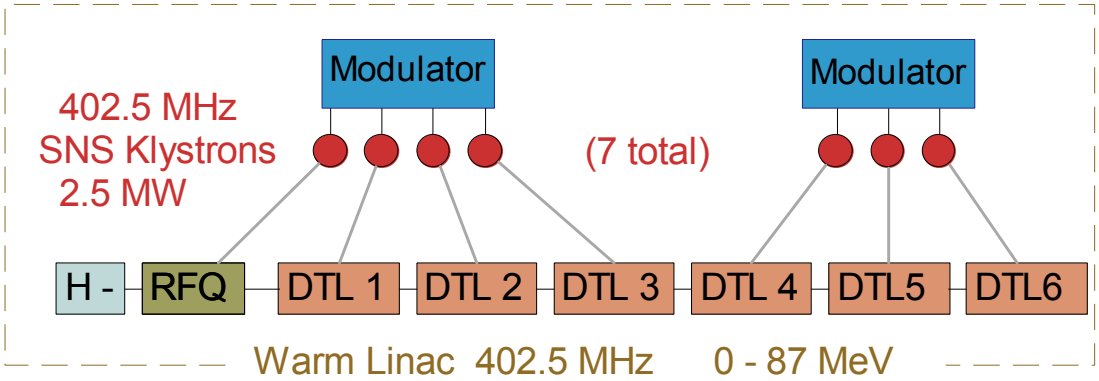

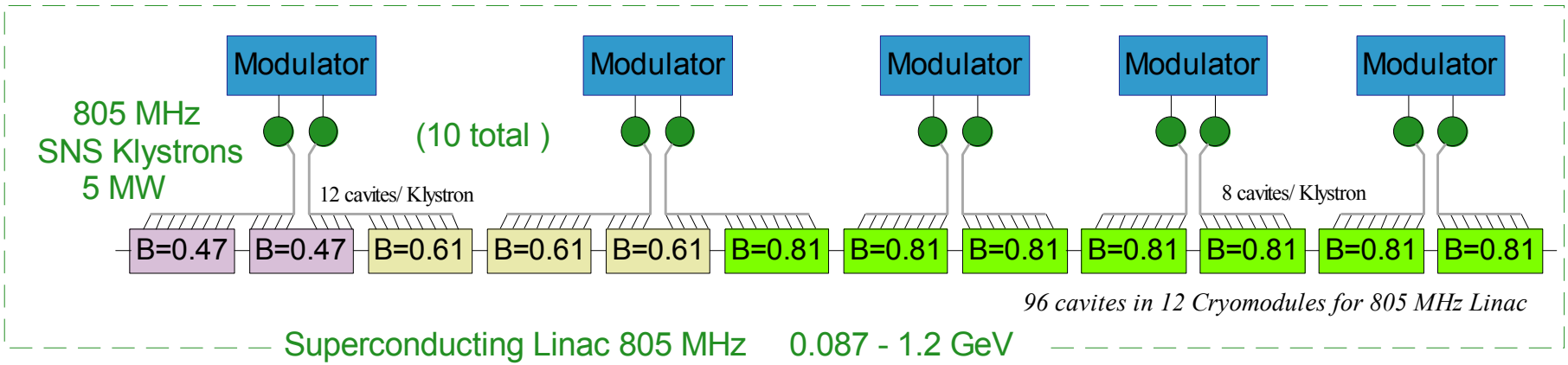

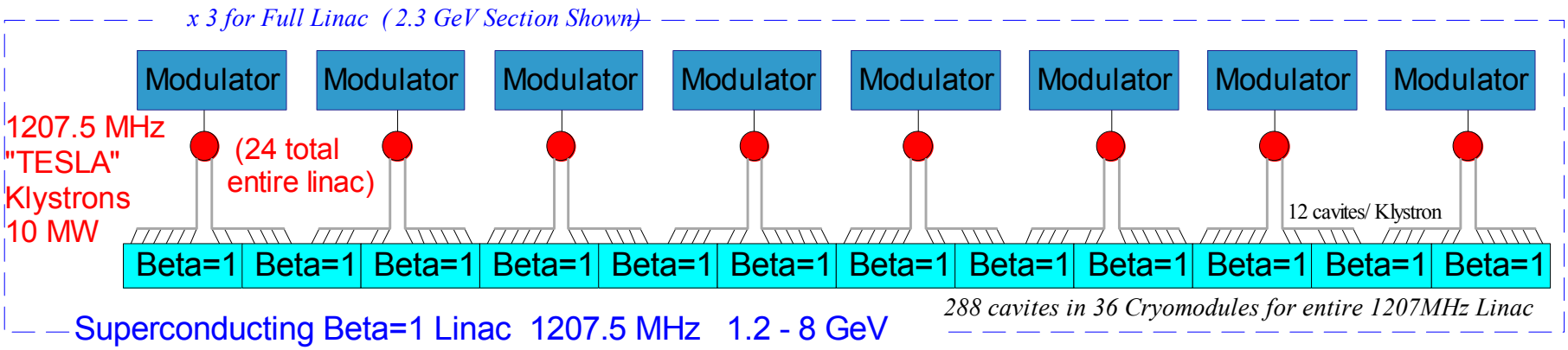

3. Higher Beam Energy / Intensity

Higher Beam Energy

1. Assume Higher Gradients
   - 12 GeV assuming TESLA(800)
   - Reduce Rep Rate and/or Increase RF Power
2. Leave Space for Additional Cryomodules

Higher Intensity (8 GeV)

1. Design Exceeds Study Specs by 5x

Higher Intensity (40-120 GeV)

1. Extend Linac Pulse Width (e.g. 5 Hz x 2msec)
2. Increase MI Rep Rate (esp. down-ramp)

4) Staging, Cost Savings, etc.

1. Baseline low gradients, Design & Deliver Higher
   - Baseline 5 GeV Linac assuming TESLA(500) gradients
   - Deliver 8 GeV Linac with TESLA(800) gradients
     - *400 Cavites → 260 Cavites*
     - *Savings: RF Distribution, Cryostats, Electronics, Linac Tunnel*
   - MI probably works OK with 5 GeV injection
     - Can perhaps be tested
2. Extend Pulse Width (1msec → 2msec) @ (10Hz→5Hz)
   - *Half the number of Klystrons & Modulators* for SCRF
   - Same Beam Current in MI (injection issues)
   - Less Beam Available for Electrons, etc.

QUICK ESTIMATE: $360M → $290M

Smaller Cost Savings

3. Eliminate Debuncher & Service Building
4. Above-Ground Klystron Gallery
5. Less Luxurious Head House

Total savings maybe another $5M - $10M

5) Top 3 Technical Risks

1. Fast Phase Shifters don't work out
   - 40 Klystrons → 400 Klystrons
2. Unexpected Problems with Protons & SCRF at SNS
   - Will be known by time of project approval
3. SNS Vendors won't take additional work at same price
   - "Solid" cost basis disappears

Proton Driver vs. 8 GeV Injector

- There is little doubt that, in principle, a synchrotron is cheaper.
- If we are manpower limited: an 8 GeV Linac has many fewer parts to design than a new Booster Synchrotron.
- The 8 GeV linac will probably be simpler to operate.
- The 8 GeV linac is more likely to produce smaller emittances, if that is the primary goal.
- It can accelerate electrons, and so has a broader range of uses.

Many Other Users of SCRF Linacs

SCRF MACHINE PARAMETERS (from JLab LLRF Conference*)

RF Parameters	Units	SNS	RIA	TESLA	12GeV CEBAF	ERLs	FEL	SPL	ELBE	
f_RF	MHz	805	57.5-805	1300	1500	1300 / 1500	749	352	1300	
Eacc	MV/m	10, 16	3, - 10	25/35	18 to 21	20	7.5	3, -9	1 -10	
Q_loaded		7.E+05	>2E7	2.E+06	3.E+07	2.E+07	1.E+07	2.E+06	2.E+07	microphonics minimization is critical to pushing up Ql in lightly beamloaded machines
beta		.61/.81	0.49/.61/.81	1	1	1	1	0.5 - 7	1	
Macro-pulse rf	msec	1.3		1.4				4		
Macro-pulse beam	msec	1		0.94				2.3		
Repetition Rate	Hz	60		5 , 10				50		
Duty Cycle		0.08	cw	0.007	cw	cw	cw		cw	
Lorentz force coef.	Hz/(MV/m)^2	spec 2, <4 now	spec 2, <4 now	1	1 to 3	1 to 3	1 to 3	2 (LEP)	1	open issue with SNS
Beam Current, ave Macro	mA	26	0.3	9.3	0.4	~0 (<0.2)	5 to 10	13	1	FEL current is understood as unmatched beam current
Beam Phase	Degrees	-20	-30	-3	0	360	-20	-20		
Number of cavity/klystrons		1	1	36	1	1?	1 ?	1 to 4	1	unclear where 1:1 tradeoff lies if performance spread of cavities is small or not in question
Number of cells/cavity		6	6	9 to 18	7	9 or 7	3		9	
Microphonics(meas.)	rms Hz	10		3 to 7	3.5			?	?	clarify low end of frequency spectrum to discount easily tracked slow drifts
Pressure sensitivity				+ 10 Hz/mb				~10		near klystron saturation, slow drift effects influence tuner operation need and control headroom
Nearest mode	MHz delta	0.8	0.8	0.8, 0.3 superstructure	1?	0.8	0.8	0.7		
System Requirements										
Microphonics	rms Hz	15	<5	10	3.5	<<1 !	2	10		
Amplitude stability (cor)				2.00E-04	1.10E-05	1.00E-04	1.00E-05			
Amplitude stability (uncor)		0.005	0.01	0.001	2.00E-04	2.00E-03	6.00E-05	0.005	0.05	
Phase stability	degrees	0.5	1	0.5	0.1	0.5??	??	0.5	1	
Klystron saturation	%	obscure accounting	??	3	10, under most extreme conditions	20	0		20	do SELs have a gain/noise advantage when operating near saturation? How do different machines deal with this?
Vector sum calibration	Degree / %			1 and 10						
Resonance Control - Slow	Hz	?		p/m 50	-2					deadband
Resonance Control - Fast	Hz	100		p/m 200	25					6*microphoics + 2* deadband
Beamloading fluctuations	%	1.2 @ 30 kHz		1	NA	2 (inj most critical)	2			Low frequ

* http://www.jlab.org/LLRF/Finalagenda.html

8 GeV Superconducting Linac
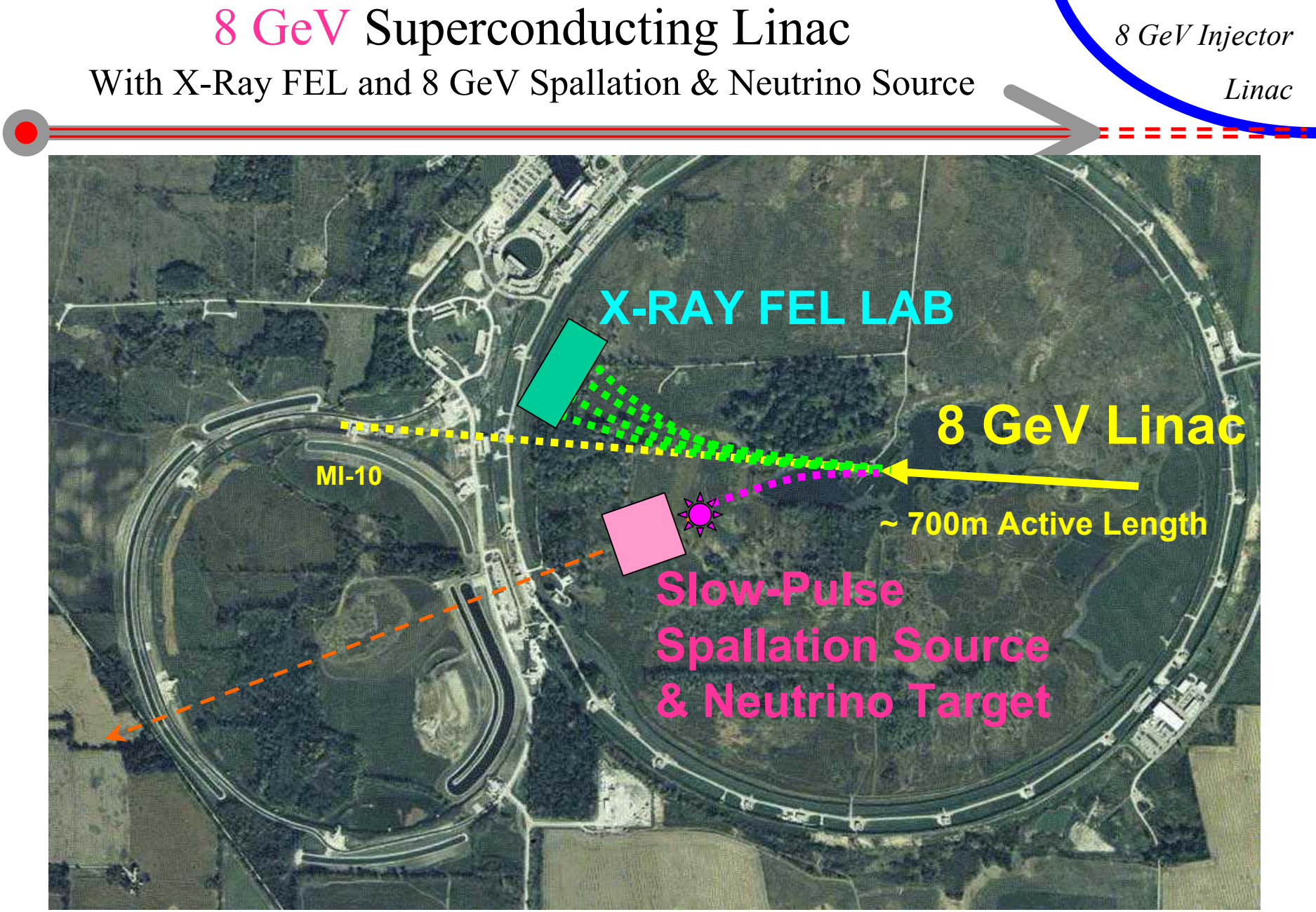
With X-Ray FEL and 8 GeV Spallation & Neutrino Source