NuMI Target

- NuMI Beam Parameters
- Target Design
- Beam Test Experience
- Neutrino Source Extrapolation

NuMI Beam Parameters

- 120 GeV Protons
- 4 E 13 / pulse at 1.9 s. rep rate
  - 0.4 MW Beam Incident on Target
- Beam spot size ~ 1.0 mm RMS

Target Design

- Design criteria include
  - Maximal neutrino yield
  - Reliability for > ten million pulses (1 yr running)
  - Module replacement capability
- Target design by IHEP, Protvino (V. Garkusha Group)
- Reported in:
  - Advanced Conceptual Design Report, NuMI-B-454, can be found at http://www-numi.fnal.gov.8875/numi/beam/beam.html
  - NuMI Facility Technical Design Report, v.1.0, Oct. 1998, Sec.3.2.3

NuMI Target Details

- Graphite (beryllium also considered)
- 3.2 mm width, 0.96 meter length
- Fin design with slots to form 'teeth'
  - each tooth 12.5 mm long, with 2 mm gap
  - ave. density ~ 1.8 g/cc
- Energy deposition
  - total average deposited power 5.3 kW in target plus support & housing
    - 3.65 kW in target segments plus support transferred to water cooling,
    - water flow rate 18 l/min
  - max. temperature 508 deg. C; ΔT/pulse 279 deg.C
  - max. deposition density ~ 0.11 GeV/cc/p

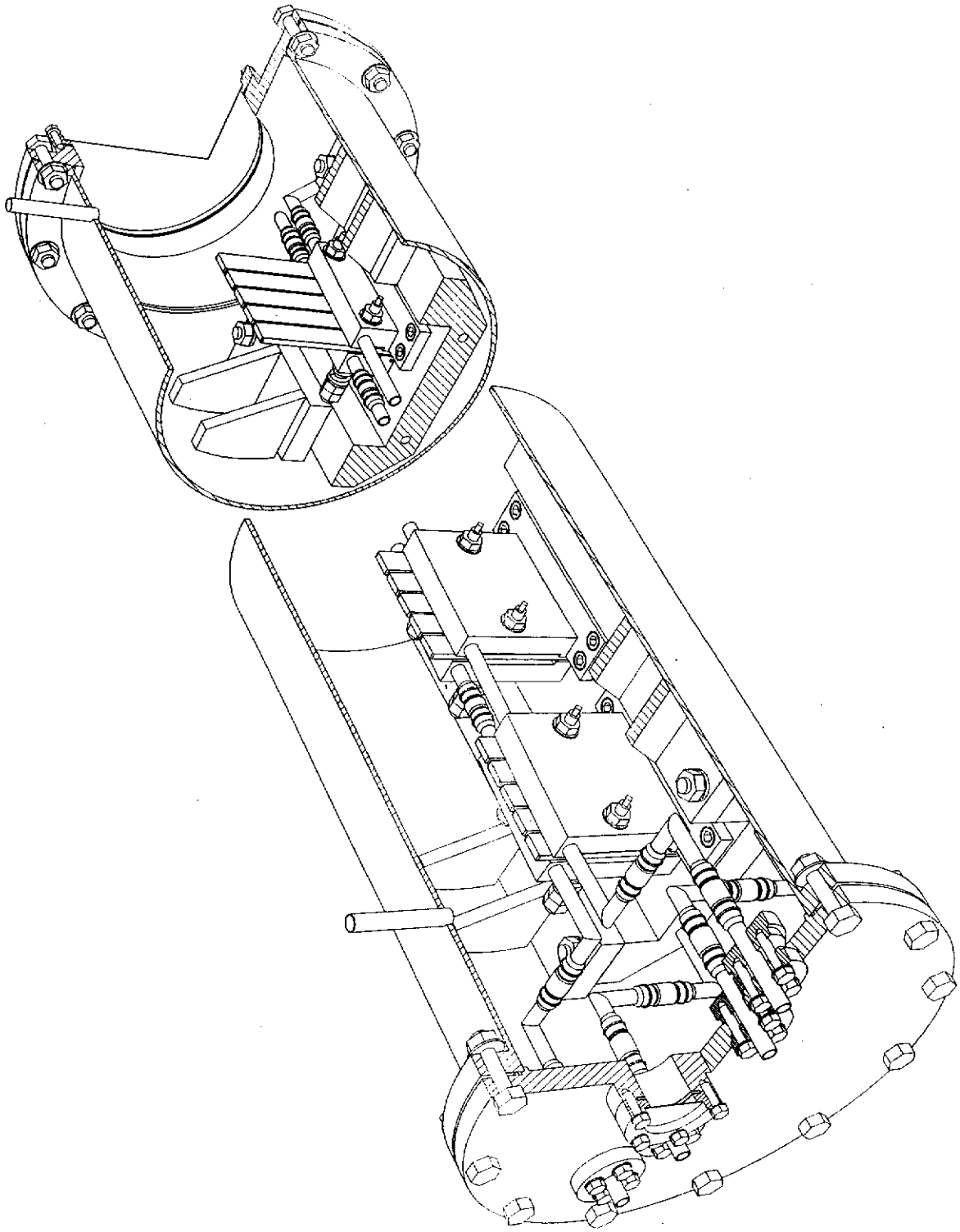

Perspective view of the target design.

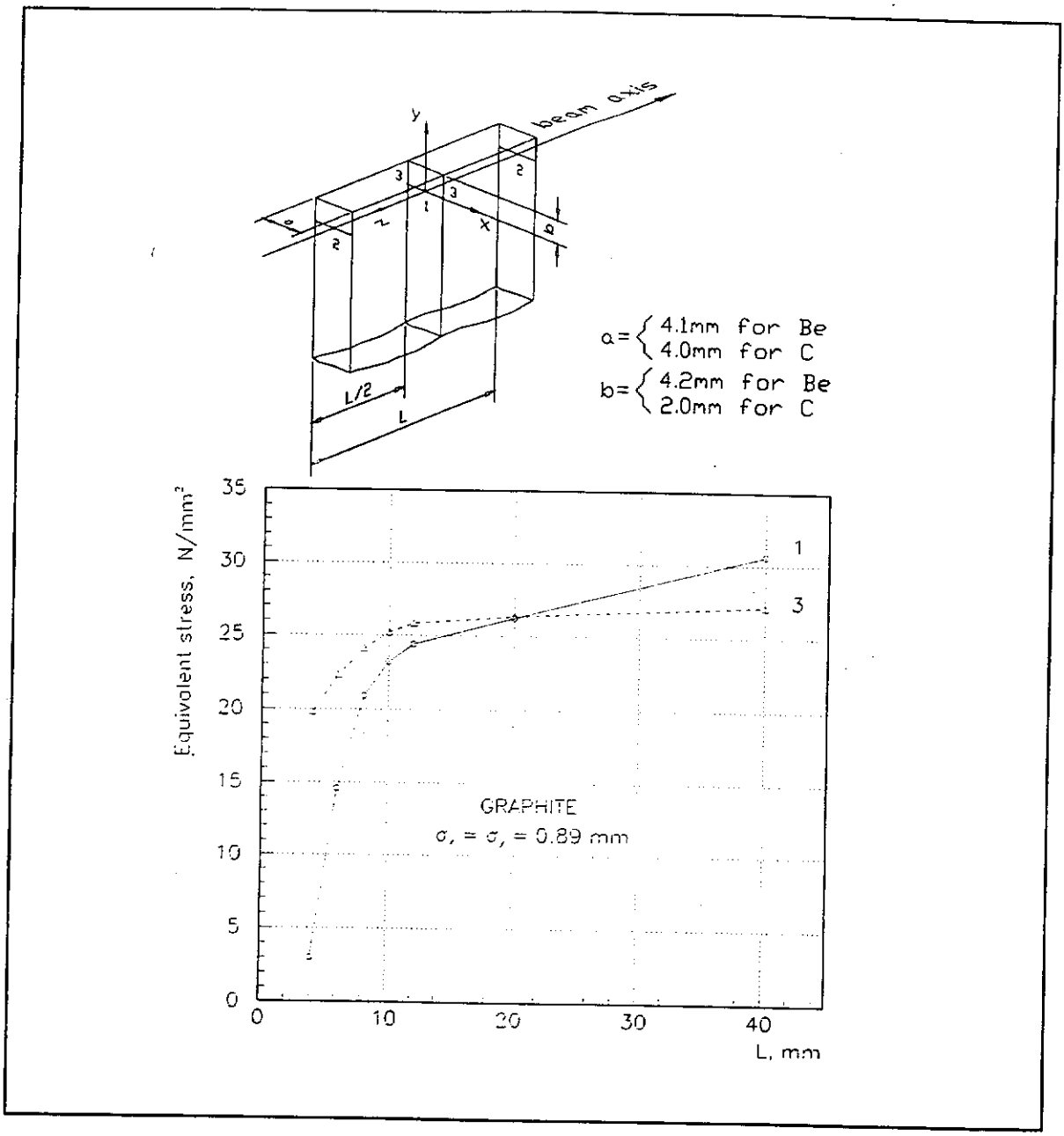

The stress at selected points in the target as a function of the tooth-length, indicating a preference for many short teeth as opposed to a long segment.

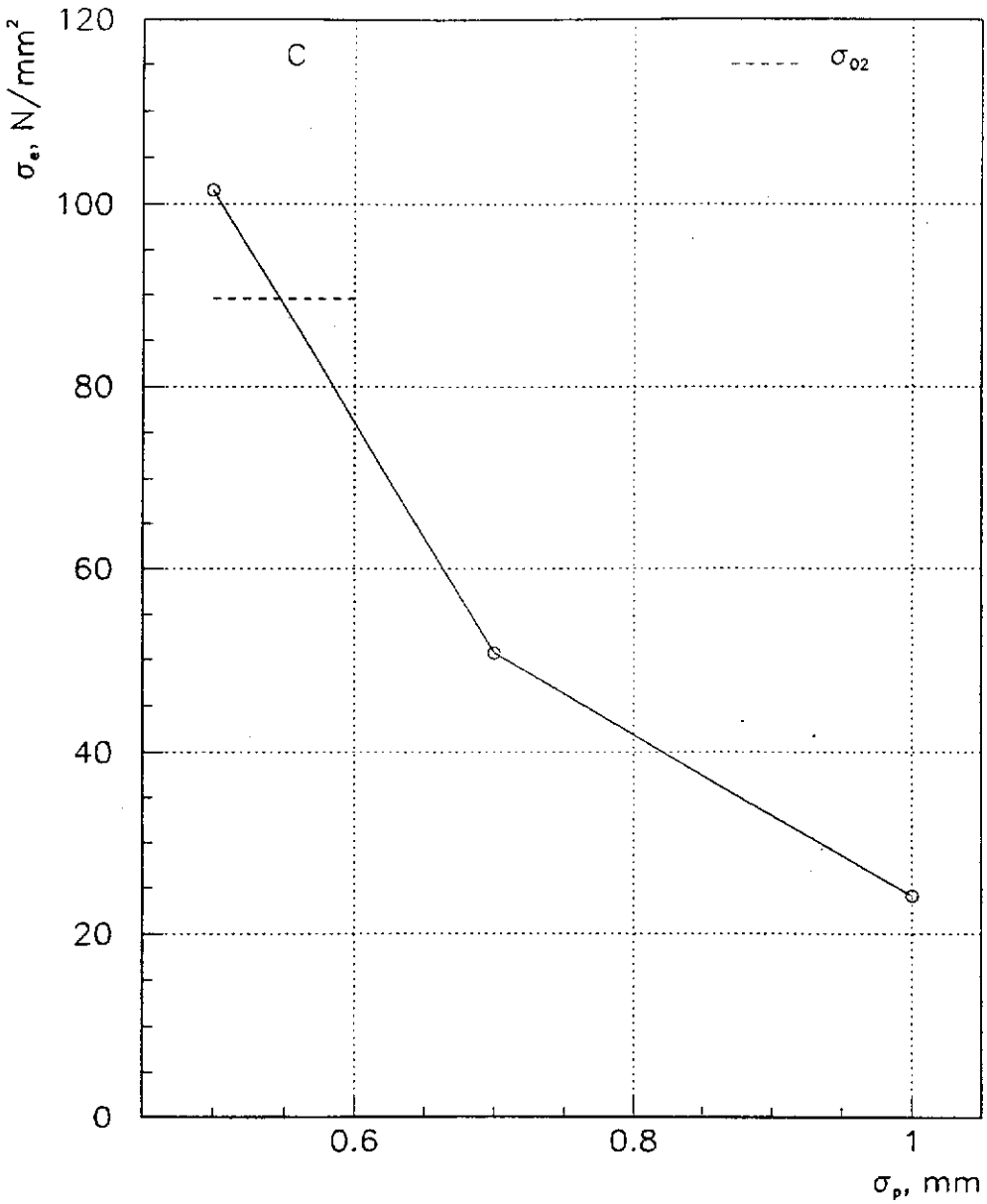

Figure 3-2-4 The maximum equivalent stress from quasi-static temperature calculations in a graphite cylinder as a function of proton beam spot size. The dashed line indicates the yield limit. The design calls for a 1 mm RMS beam spot.

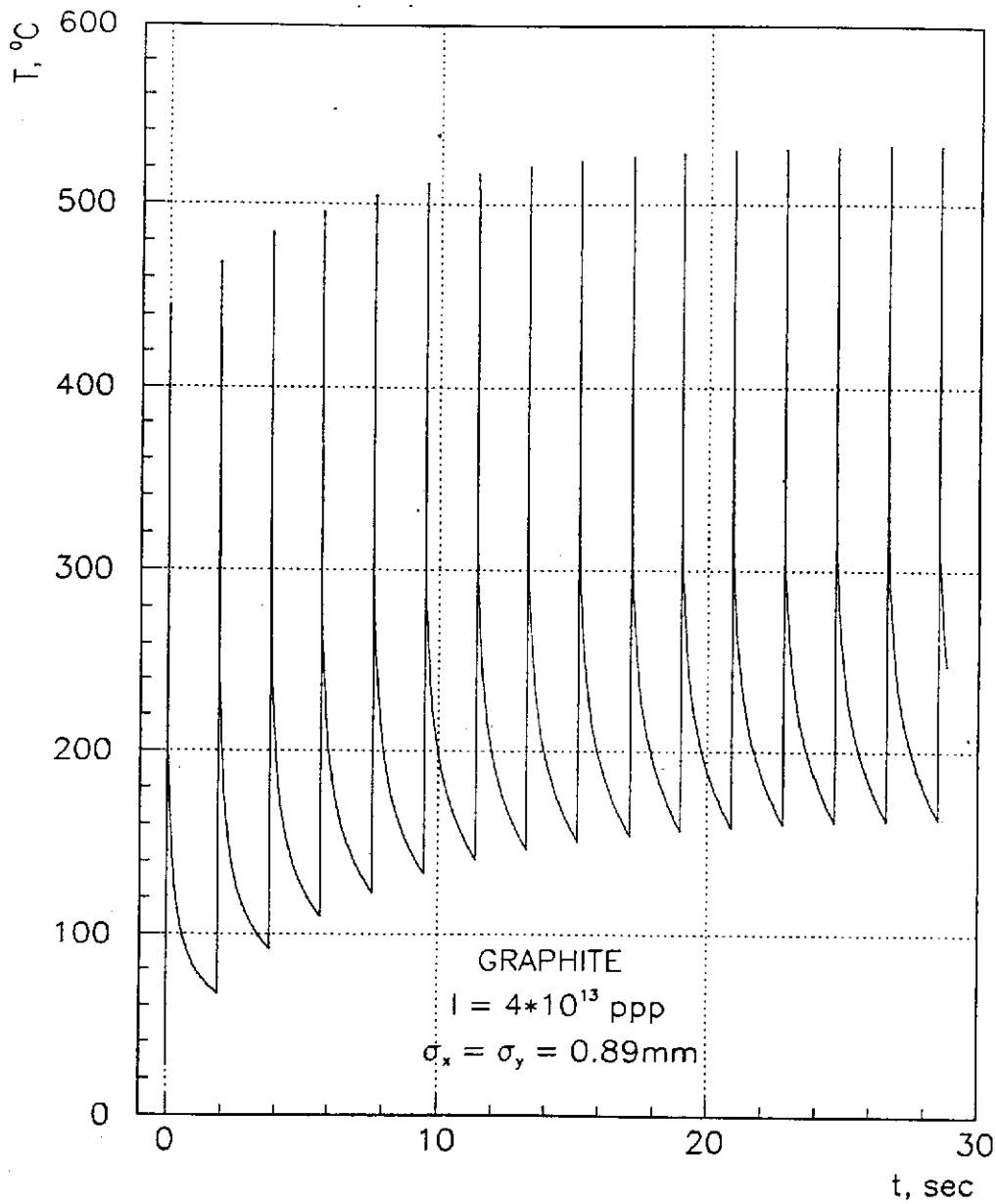

The maximum temperature in the target as a function of time.

Beam Test Experience

- Test carried out with prototype target in APO beam line.
- Reduced beam size used (0.25 - 0.3 mm sigma) to compensate for lower intensity of 0.5 - 1.0 E13/ pulse; match NuMI beam energy density.
- Primary motivation is to determine if is significant yield strength degradation with accumulated radiation dose.
- Accumulated 5.4 E17 p.o.t. in 400 hrs. Only available data with same graphite, but using low energy neutron beam, shows increase in elastic modulus by x 2 at this equivalent exposure; only slow increase with additional exposure.
- No problems with target observed

Neutrino Source Extrapolation

- With projected neutrino source beam distributions - 3 mm sigma - on a 7.5 mm radius target, incident beam energy density for 2 MW beam is similar to that projected for NuMI.
- Neutrino source MARS projection (N. Mokhov) for energy deposition in graphite with 1 MW beam is 23 kW. (for NuMI deposition in target segments is 1.54 kW, or x 15 less; energy deposition density is similar for NuMI and 1 MW neutrino source)
- *Key design issue becomes target cooling with minimal impact on secondary beam flux.*

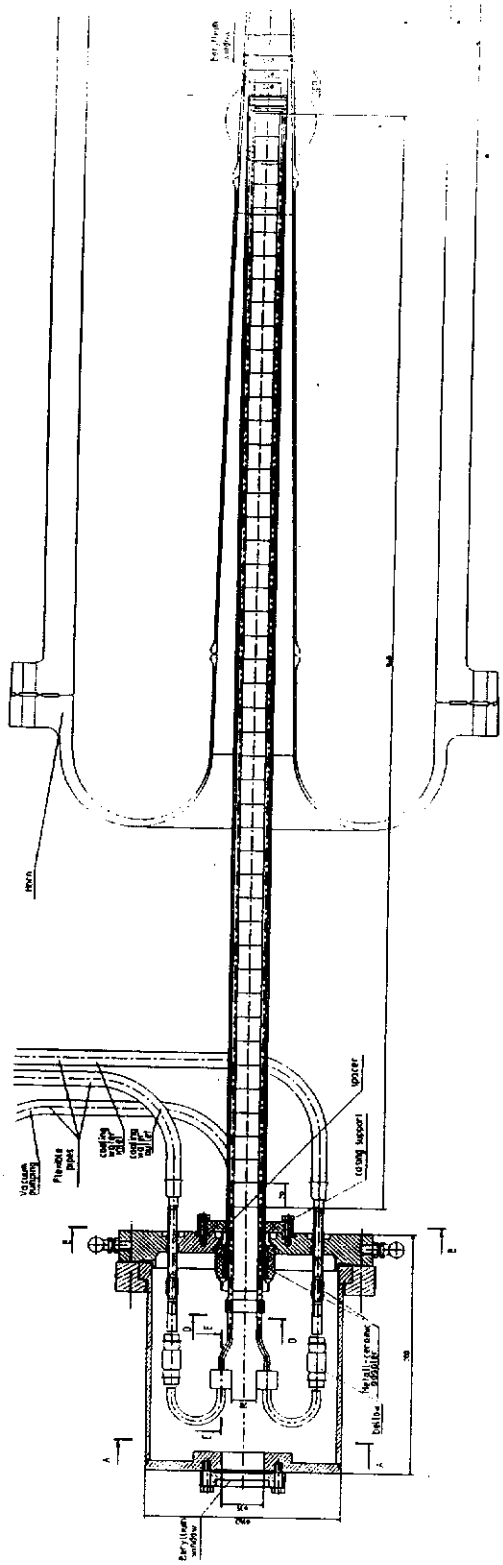

Figure 1.3: The general view of the LE target design.

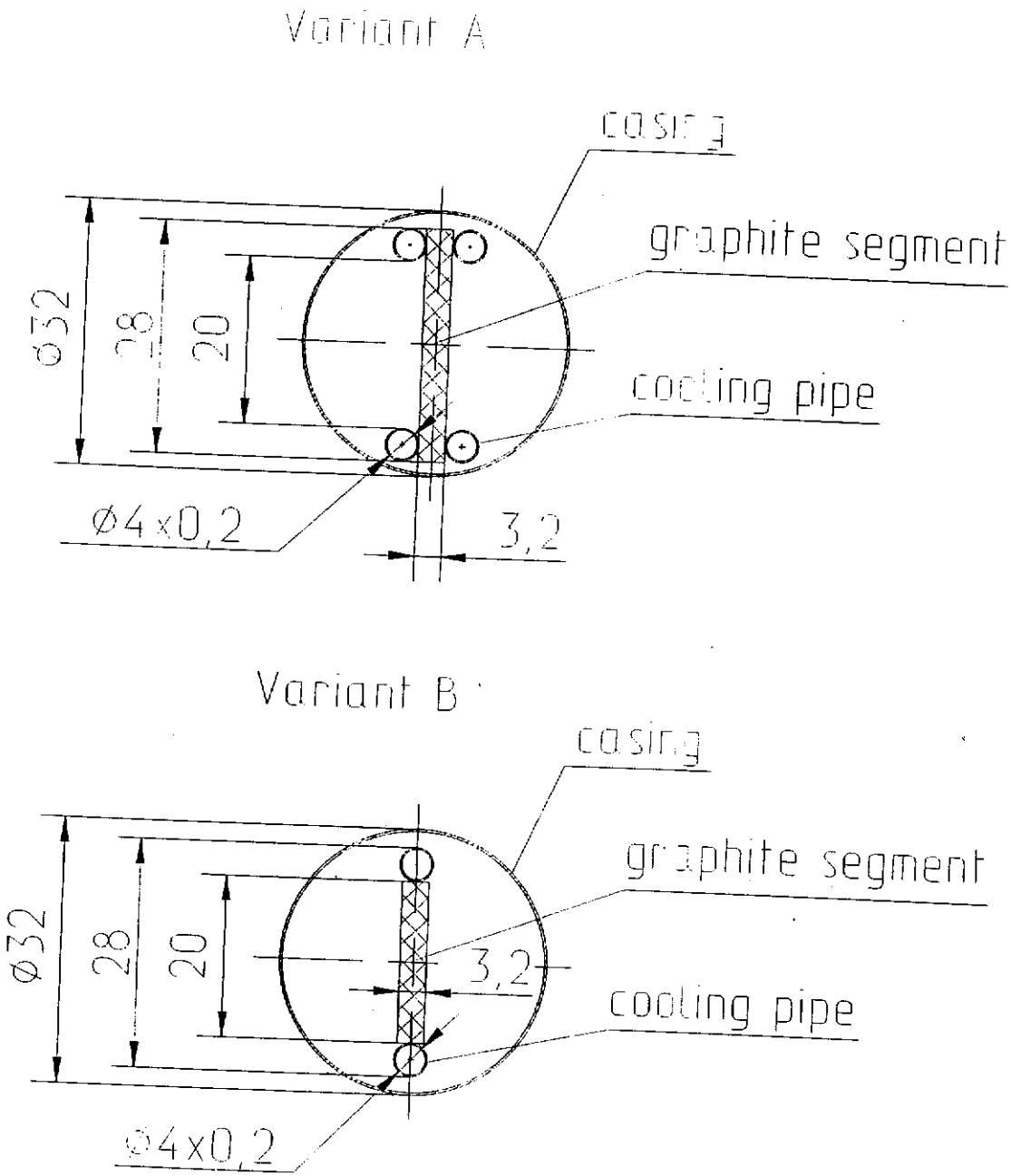

Figure 1.2: Possible configurations of the LE target cross-section. "+" indicates the water input, "–" indicates the water output.