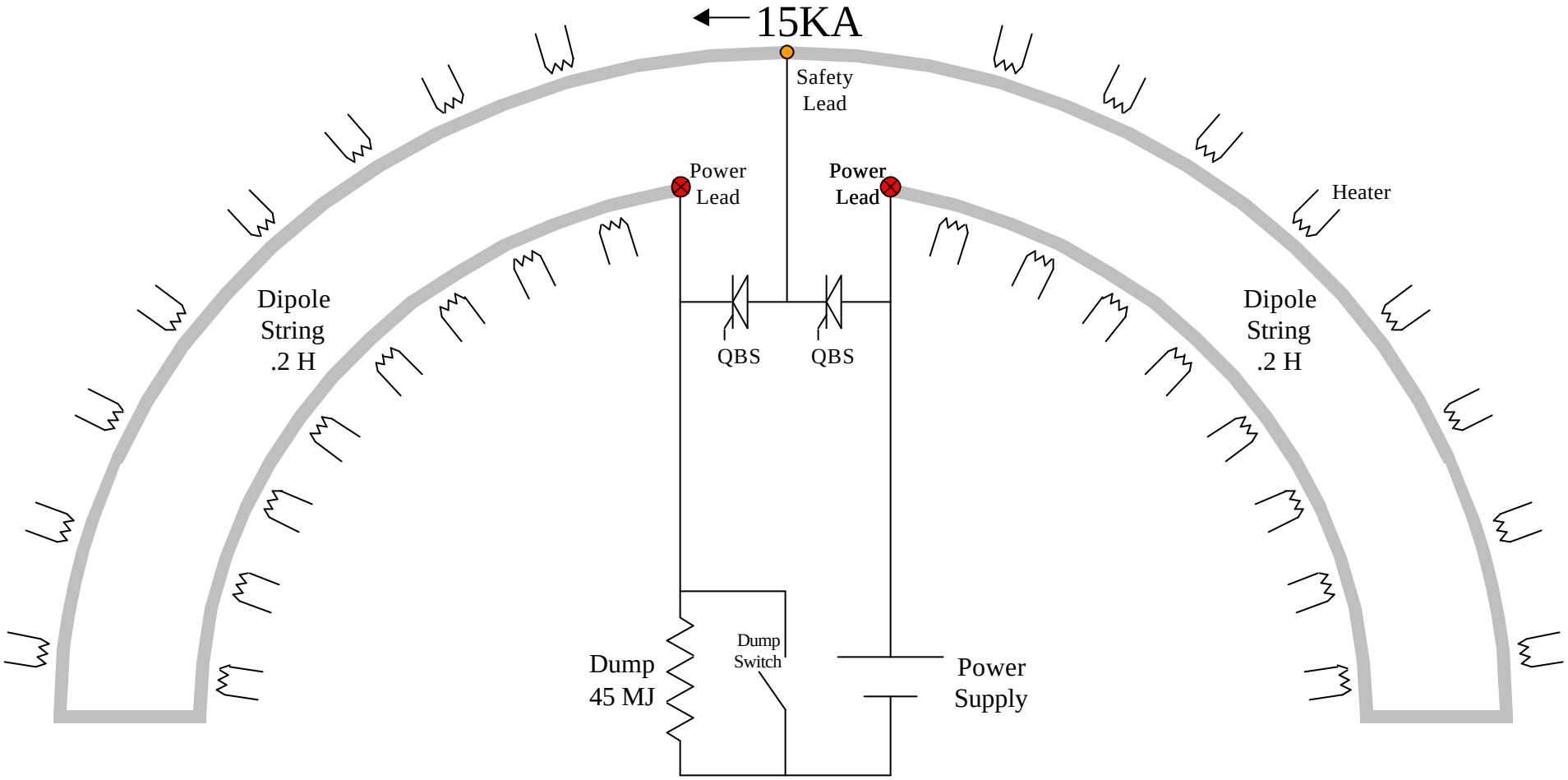MμSR Dipole Quench Protection