Induction Machine for Phase Rotation

J. Fockler, M. Green, C. Kim, D. Vanecek,
and S. Yu

Neutrino Factory and Muon Collider Collaboration
Meeting
December 14, 1999
LBNL

Induction Linacs and Long Solenoidal Channels

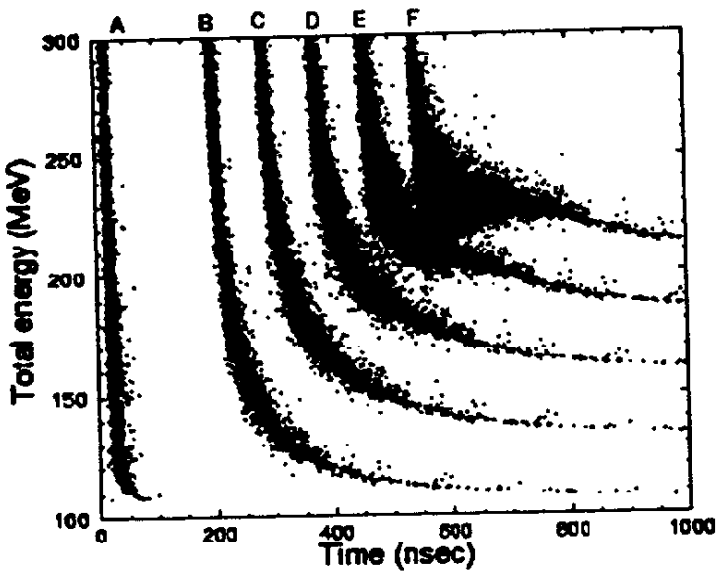

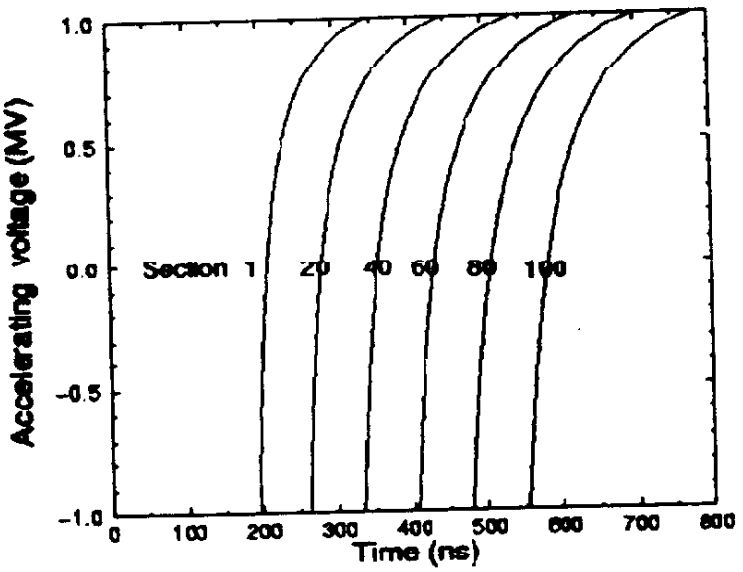

50 m drift before ϕ rotation

<u>For carbon target</u>:

0.10 μ/p between 225 - 240 MeV

0.13 μ/p between 220 - 250 MeV

0.18 μ/p between 200 - 270 MeV

Trade off:

Energy Spread after rotation$\Leftrightarrow$ drift channel length [loss]

Particle capture$\Leftrightarrow$length(voltage) in induction linac [loss]

We are constructing an induction linac point design

- 200 MV (head to tail) in 100 meters
- 15 Hz
- 4 pulses/burst
  - 100 ns pulselength (hyperbolic ramp)
  - 300 ns spacing (beam off time)
- 3×10^8 pulses/year
- 1.25 T (90% packing) at 30 cm bore radius (or equivalent BR^2)

Design Criteria

Technical feasibility

Power consumption

Capital cost

Reliability

Questions Commonly Asked

Can the high gradient of 2 MV/m be achieved?

Can you generate four closely spaced pulses?

What about the interaction of the solenoidal field with the magnetic cores?

	dates	Energy	Current	Width	Rep-rate	Location
Astron I	1960-1968	4 MeV	500 A	400 ns	5-1440 Hz	LLNL
Astron II	1968-75	6 MeV	800 A	400 ns	5-1000 Hz	LLNL
ERA	1969-74	4 MeV	1.2 kA	40 ns	1 Hz	LBNL
ETA	1978-88	5 MeV	10 kA	50 ns	1-1000 Hz	LLNL
FXR	1981--	15 MeV	5 kA	50 ns	1/3 Hz	LLNL
ATA	1982-90	50 MeV	10 kA	70 ns	1-1000 Hz	LLNL
ETA II	1988-92	6 MeV	1 kA	70 ns	1-5000 Hz	LLNL
MBE-4	1985-91	1 MeV	0.4 A(Cs^+)	4-.4 µs	1/5 Hz	LBNL
RTA	1995-	1 MeV	1 kA	300 ns	1 Hz	LBNL
DARHT-I	1999	20 MeV	4 kA	80 ns	1/60 Hz	LANL
DARHT-II	1999-	20 MeV	2 kA	2 µs	1/60 Hz	LANL
MUON PHASE ROTATOR		±100 MeV	16 A	100 ns	15 Hz (x 4 pulses)	

DAKHI- II (el)

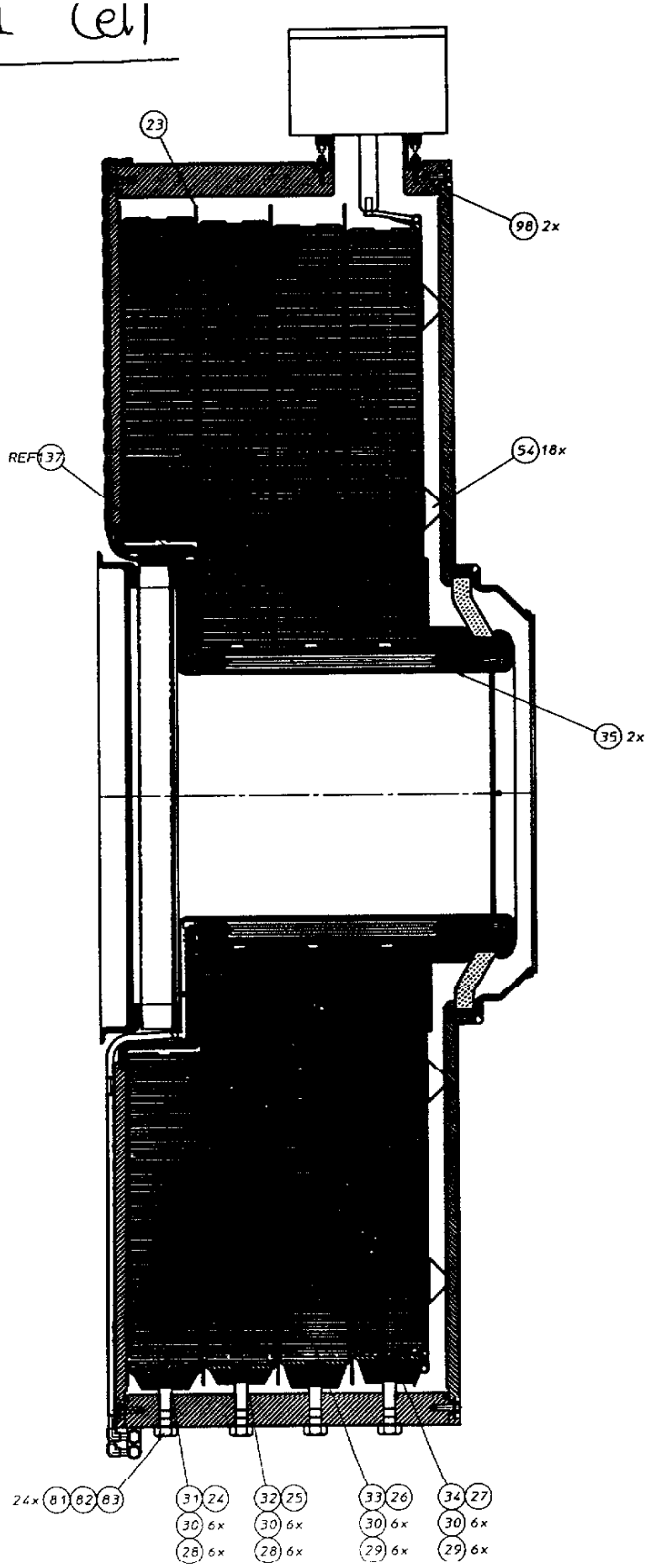

23
98 2x
REF 137
54 18x
35 2x
24x 81 82 83
31 24
30 6x
28 6x
32 25
30 6x
28 6x
33 26
30 6x
29 6x
34 27
30 6x
29 6x

MUON PHASE ROTATOR

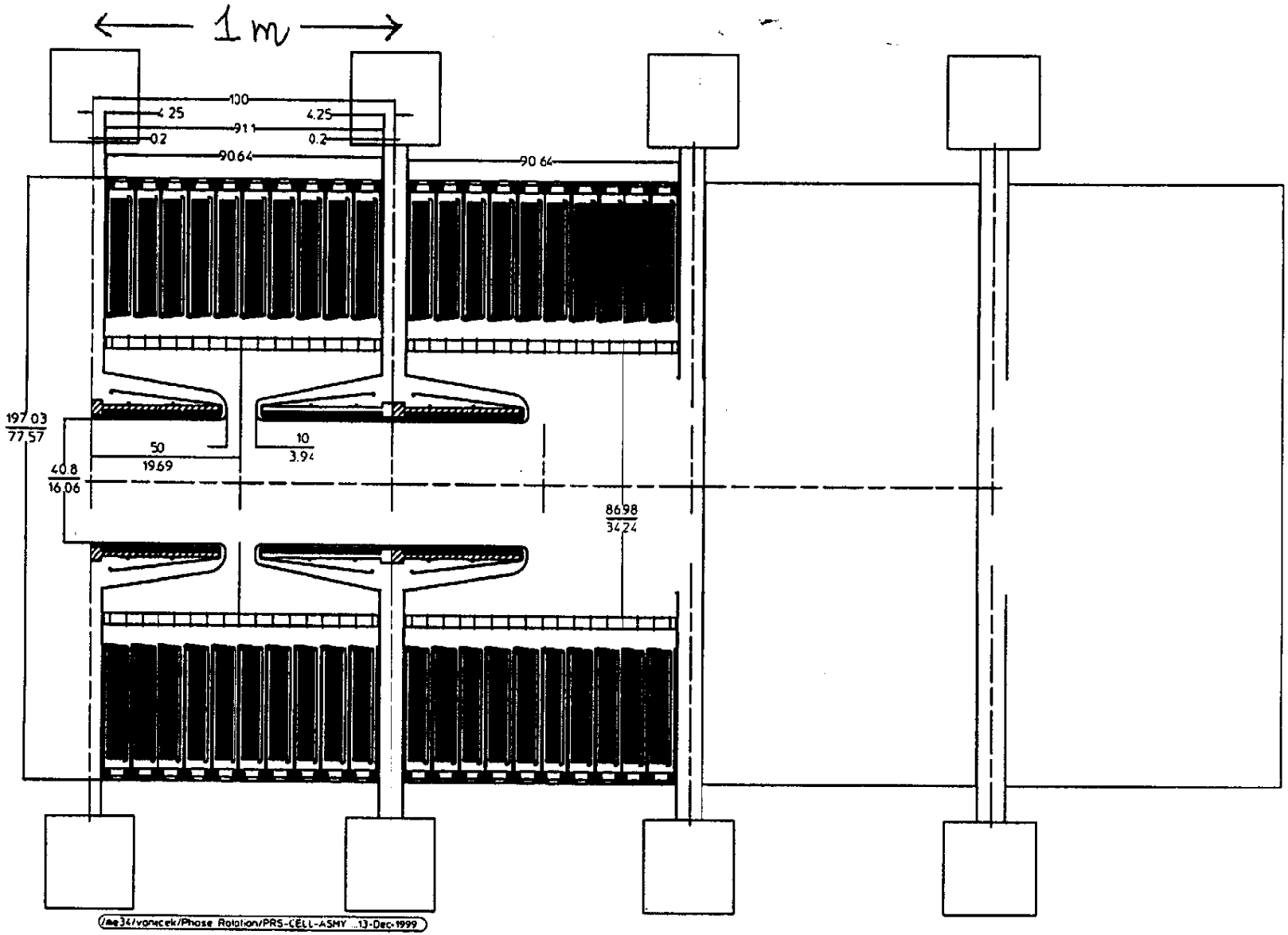

1- m long cell

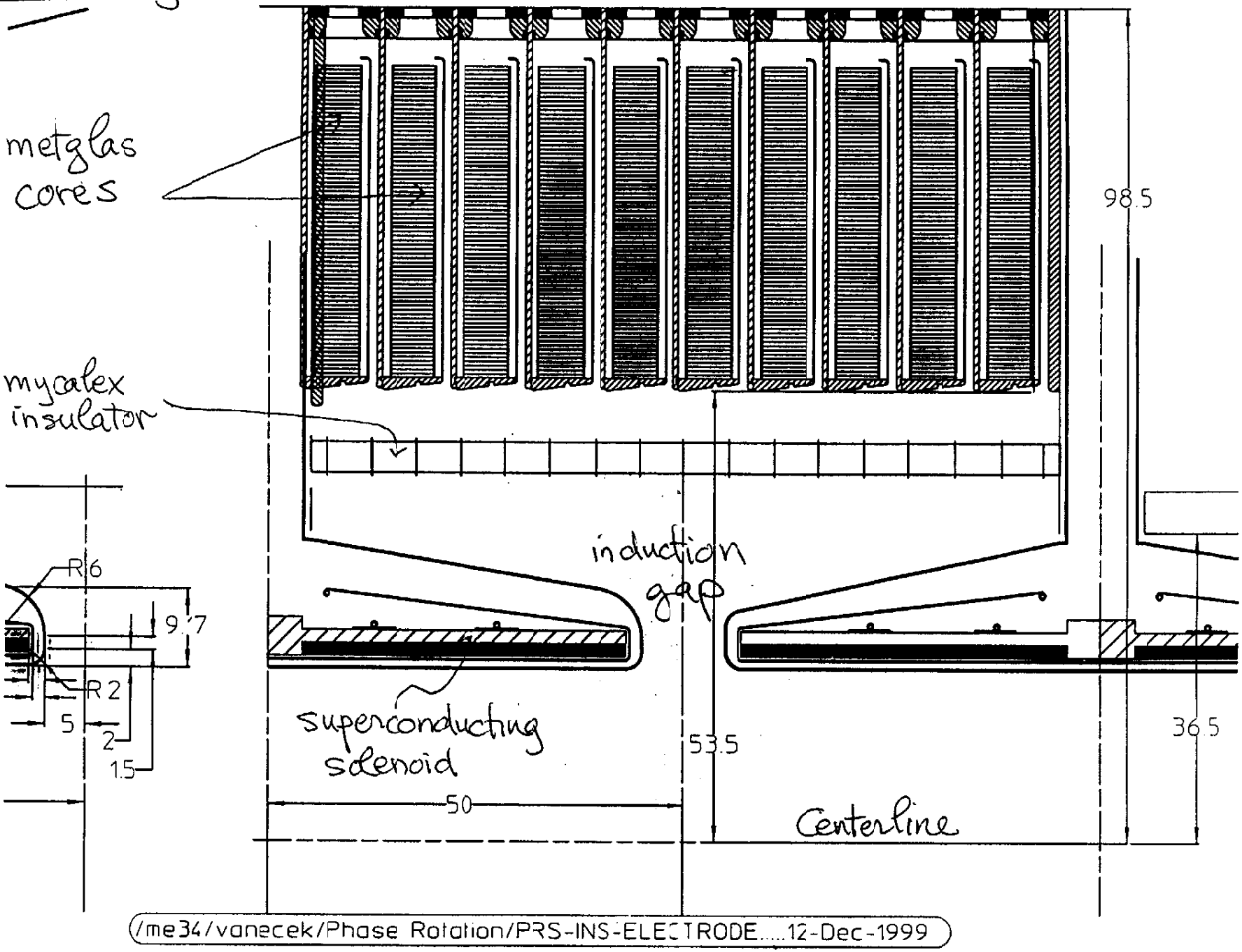

/me34/vanecek/Phase Rotation/PRS-INS-ELECTRODE.....12-Dec-1999

The magnetic induction module

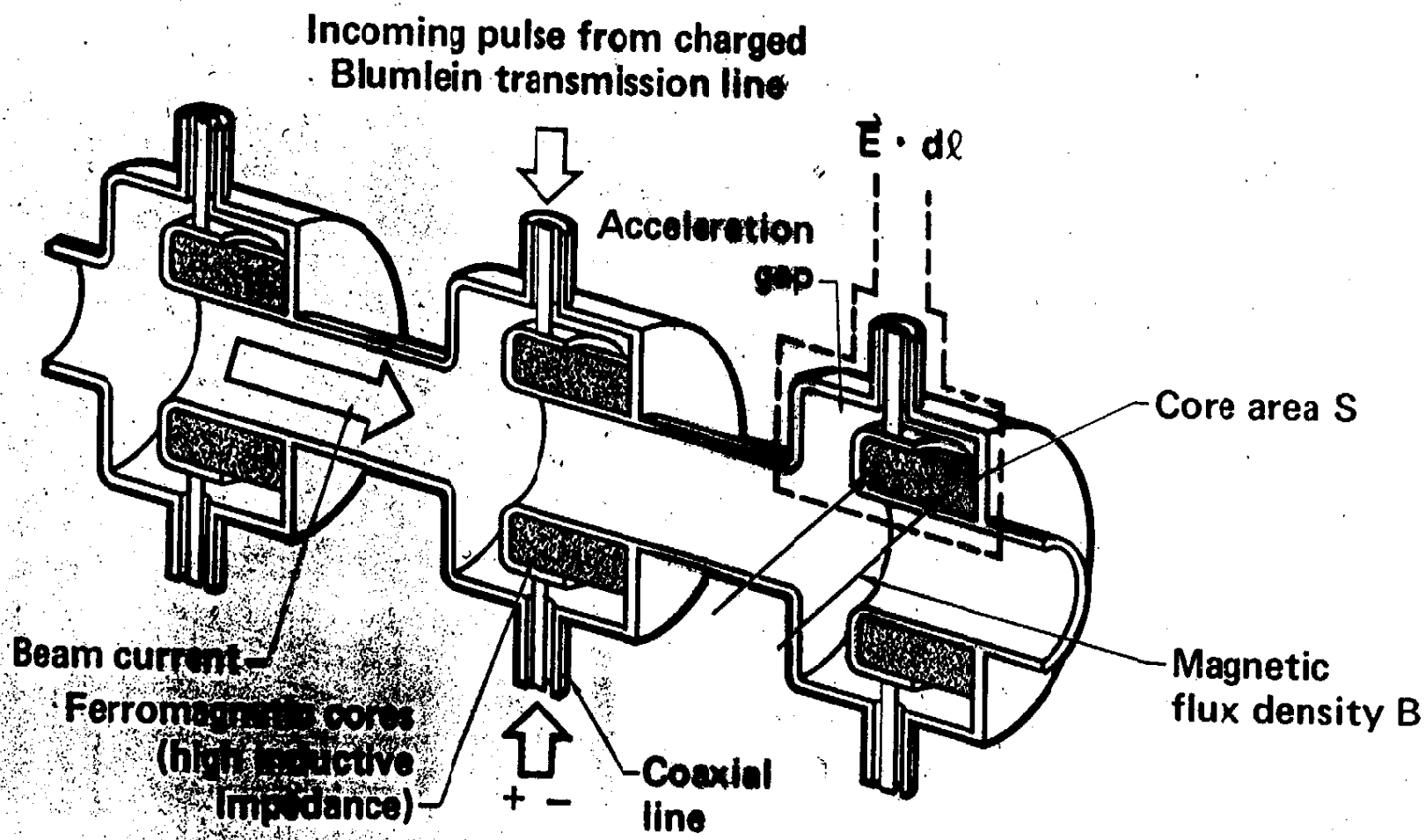

$$\oint \vec{E} \cdot d\vec{\ell} = -\int_S \frac{d\vec{B}}{dt} \cdot d\vec{S}$$

60-A-1983-8A

Figure 1

Induction Module Design:

$$\boxed{V \cdot \tau = \Delta B \cdot A}$$

Voltage × pulse length = Flux swing × cross-sectional area

Muon phase rotator : $V\tau$ = 20 volt-sec in 100 m

(DARHT-II : $V\tau$ = 40 volt-sec in 40 m)

$$\Delta B \begin{cases} 3\,T & 2605\ SC \\ 1.5\,T & 2705\ M \\ 1.1\,T & 2714\ A \end{cases}$$

FIELD STRESS IN VACUUM, INSULATOR, OIL all CONSERVATIVE

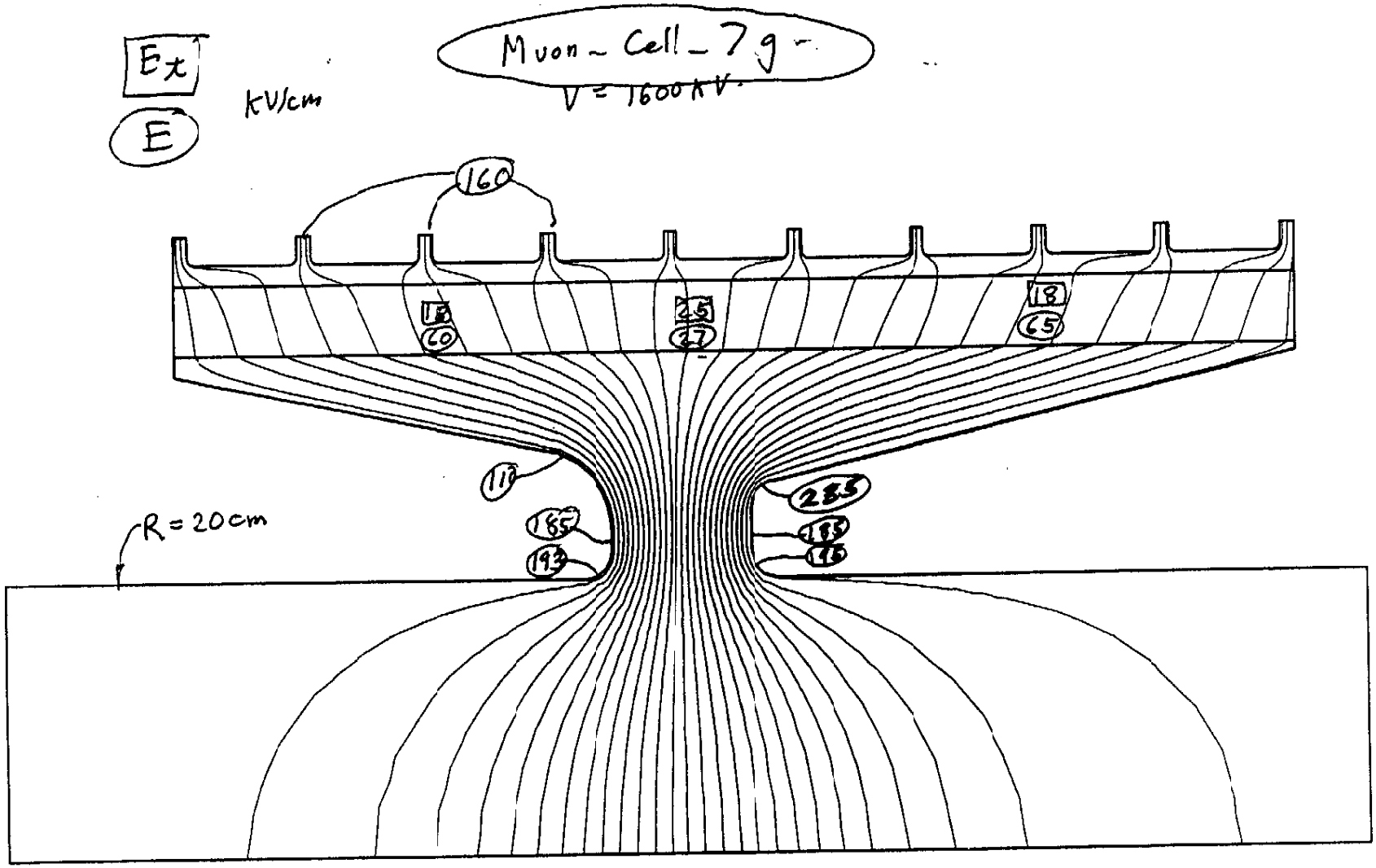

10cm Vacuum Gap

High Voltage Column: Mycalex Stack 3 and 4 Completed

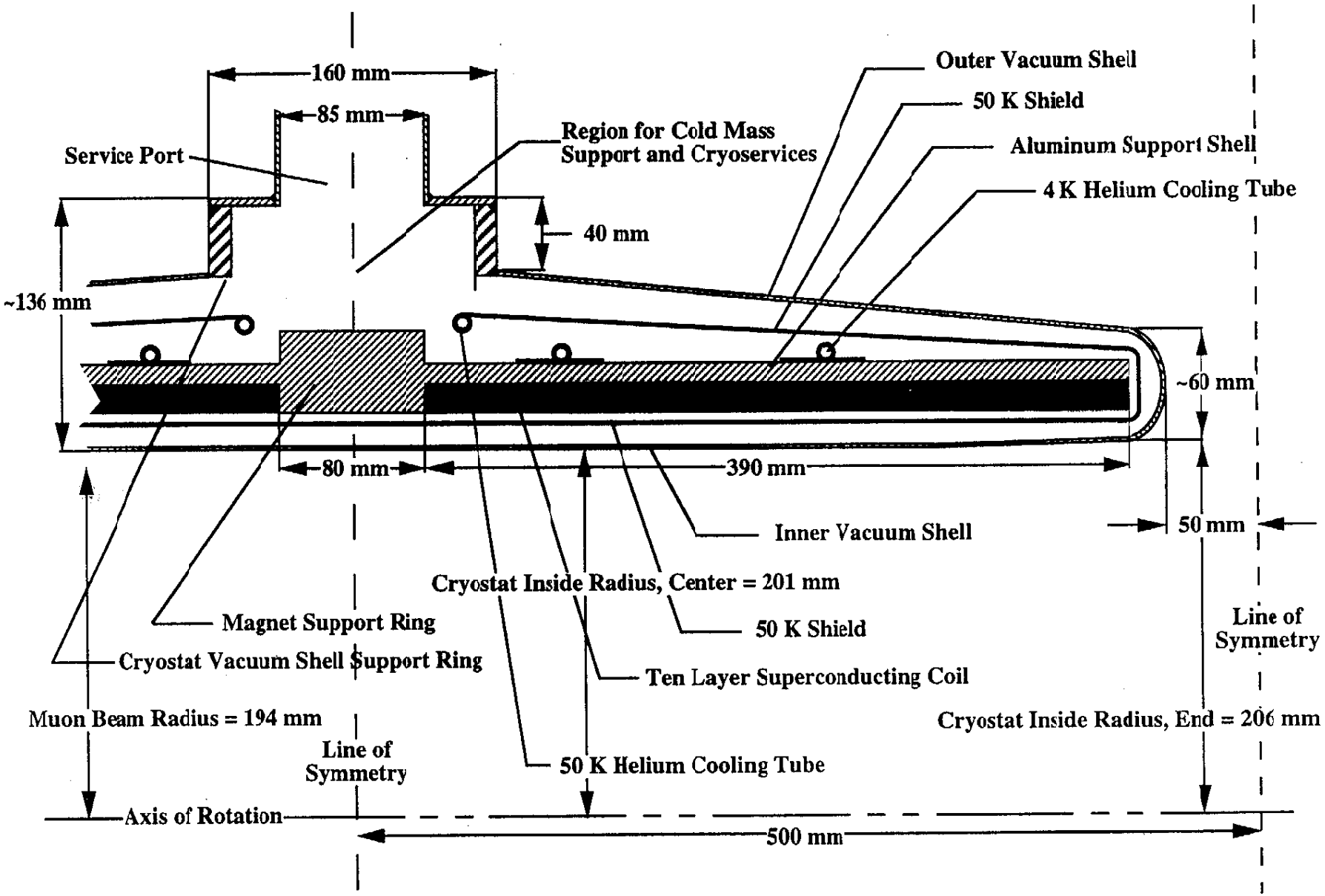

Case #16 Quarter Section of a 3.0 T Solenoid for the Phase Rotation System

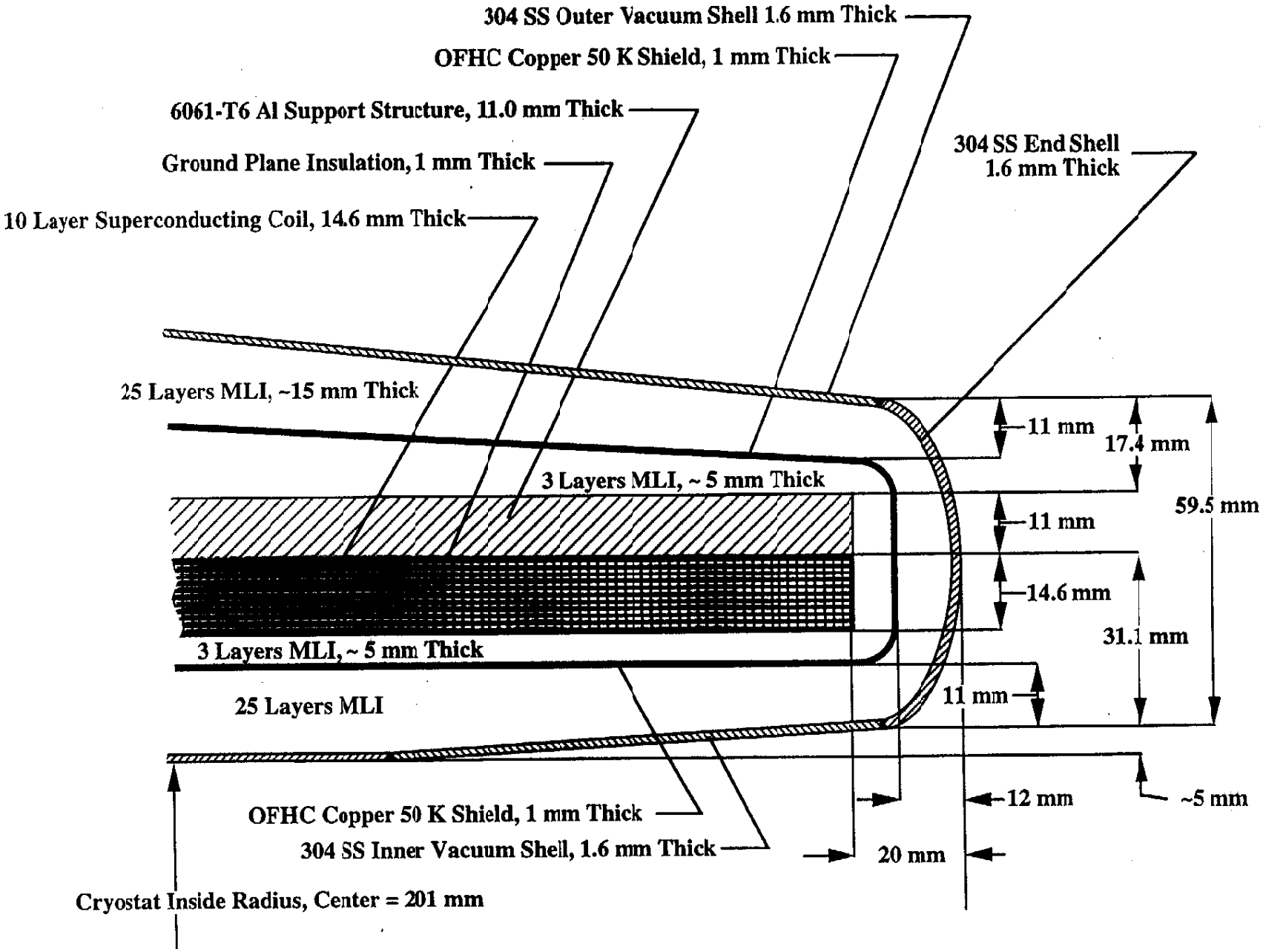

Case #16 Full Scale End Section of the 3.0 T Phase Rotation Solenoid

Basic Design Parameters for a 900 mm Long 3 Tesla Phase Rotation Solenoid

Physical Parameters	
Cell Length (mm)	1000
Gap Length (mm)	100
Coil Package Length (mm)	860
Cryostat Length (mm)	900
Nominal Beam Radius (mm)	194
Cryostat Inside Radius (mm)	201
Gap Between Coils Length (mm)	80
Length of Each Coil (mm)	390
Coil Inside Radius (mm)	223.0
Coil Thickness (mm)	14.6
Support Shell Thickness (mm)	11.0
Cryostat Thickness at End (mm)	59.5
Cryostat Shank Thickness (mm)	96.0
Magnet Cold Mass (kg)	247.1
Overall Magnet Mass (kg)	291.7
Electrical Parameters	
Magnet Average Induction (T)	3.00
Estimated Bmax/Bmin on Axis	~1.15
Number of Coils per Cell	2
Number of Layers	10
Number of Turns per Layer	229
Cell Number of Turns	4580
Estimated Peak Induction (T)	~4.5
Design Current (A)	521.3
Operating Temperature (K)	4.4
Superconductor Ic (A)	~790
Cell Stored Energy (kJ)	617.7
Cell Self Inductance (H)	4.55
Cost Parameters	
Magnet Cost for One Cell (k$)	~280
Magnet Cost for 100 Cells (M$)	~15.4

(DARHT-II TOS STUDIES)

Predicted Pulses for 4-Pulse Injector

(using Ideal and Normalized Core Models)

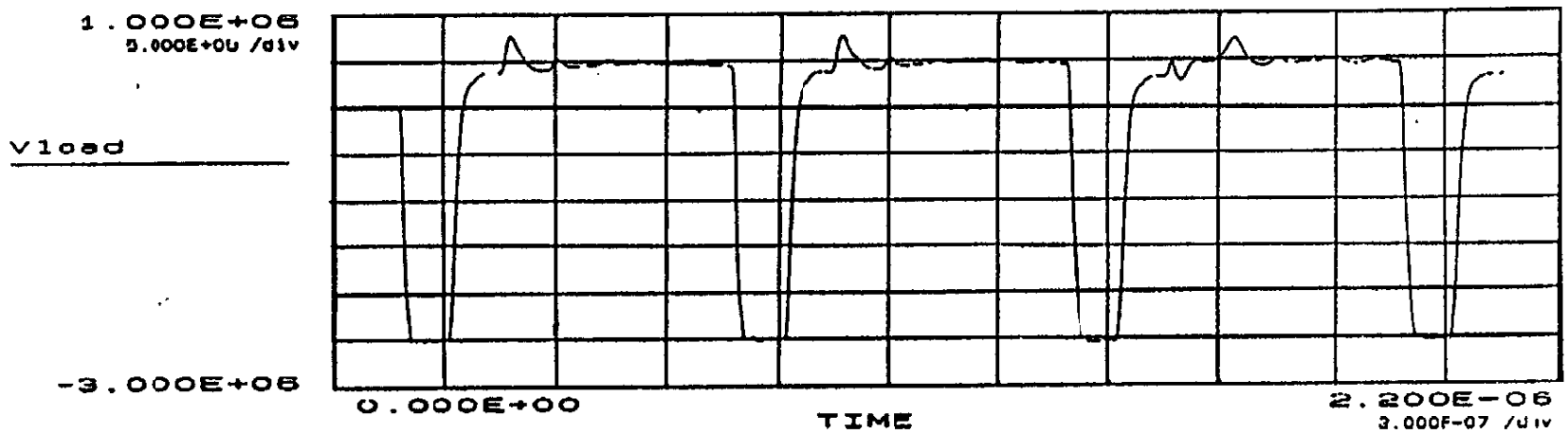

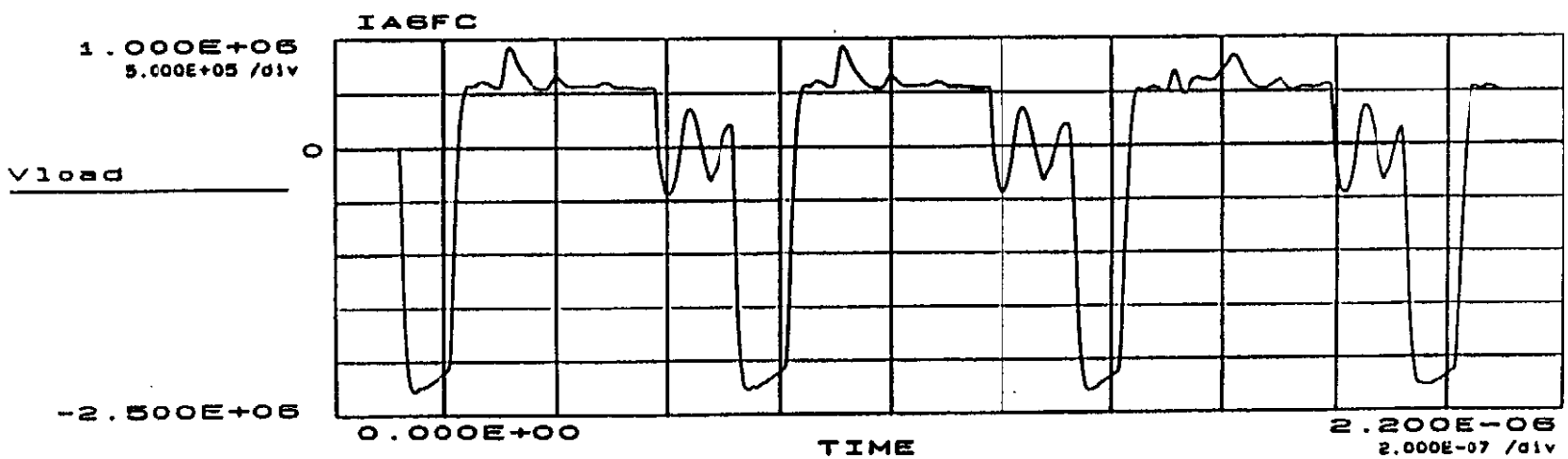

Three Methods of Creating a Train of Four Pulses

(DARHT-II TOS STUDIES)

Scheme 1 - Series PFLs

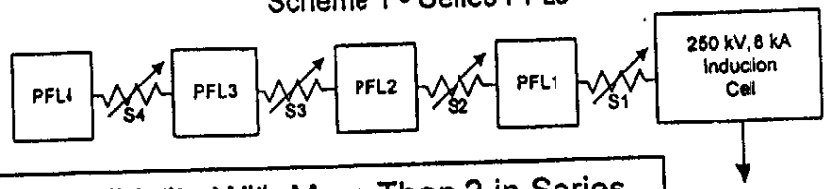

Low Confidence in Maintaining Pulse Fidelity With More Than 2 in Series

Scheme 2 - Series cells

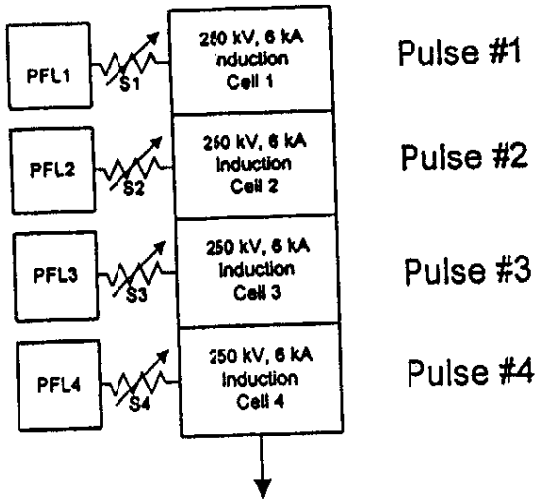

Pulse Distortion Results From Passing Beam Through Unenergized Cells; Longer Accelerator

Scheme 3 - Parallel PFLs

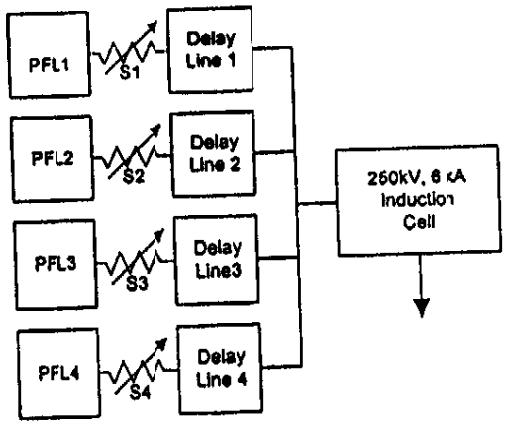

Low Impedance Requires Higher PFL Voltage; Requires Twice As Many Delay Lines.

200 MeV, ~~0.5 kA~~ Muon Beam Induction Linac Block Diagram
1 of a total of 100 Cells

- Switches S1-S4 are Saturable Reactors based on SLIA Rep Output Reactor design
- For 4 PFLs 50 nF, 4.0 kJ

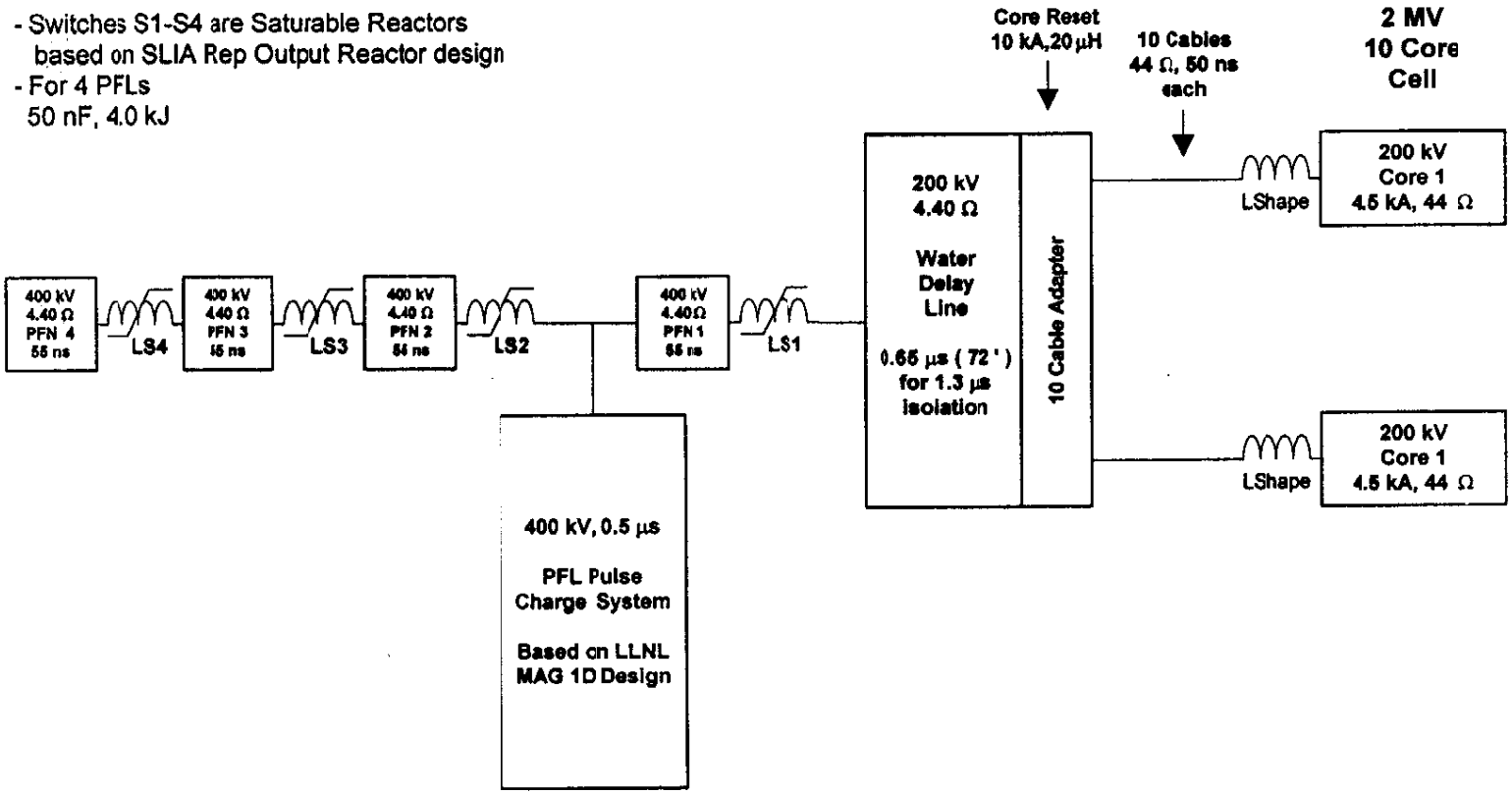

Switches S1-S4 are Saturable Reactors based on SLIA Rep Output Reactor design

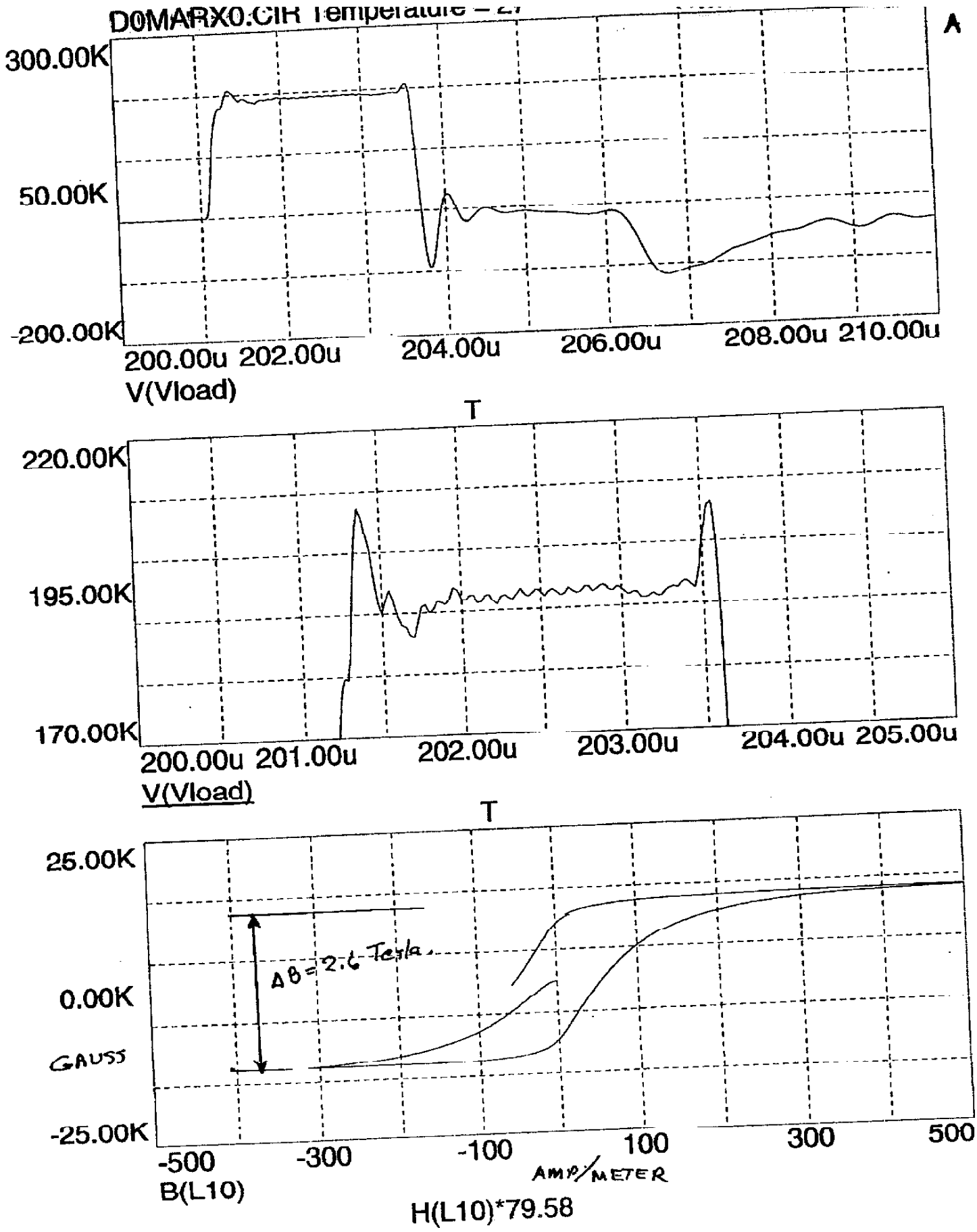
D0MARX0.CIR Temperature = 27
A
300.00K
50.00K
-200.00K
200.00u 202.00u 204.00u 206.00u 208.00u 210.00u
V(Vload)
T
220.00K
195.00K
170.00K
200.00u 201.00u 202.00u 203.00u 204.00u 205.00u
V(Vload)
T
25.00K
0.00K
GAUSS
-25.00K
ΔB = 2.6 Tesla
-500 -300 -100 100 300 500
AMP/METER
B(L10)
H(L10)*79.58

Timing of voltage waveform

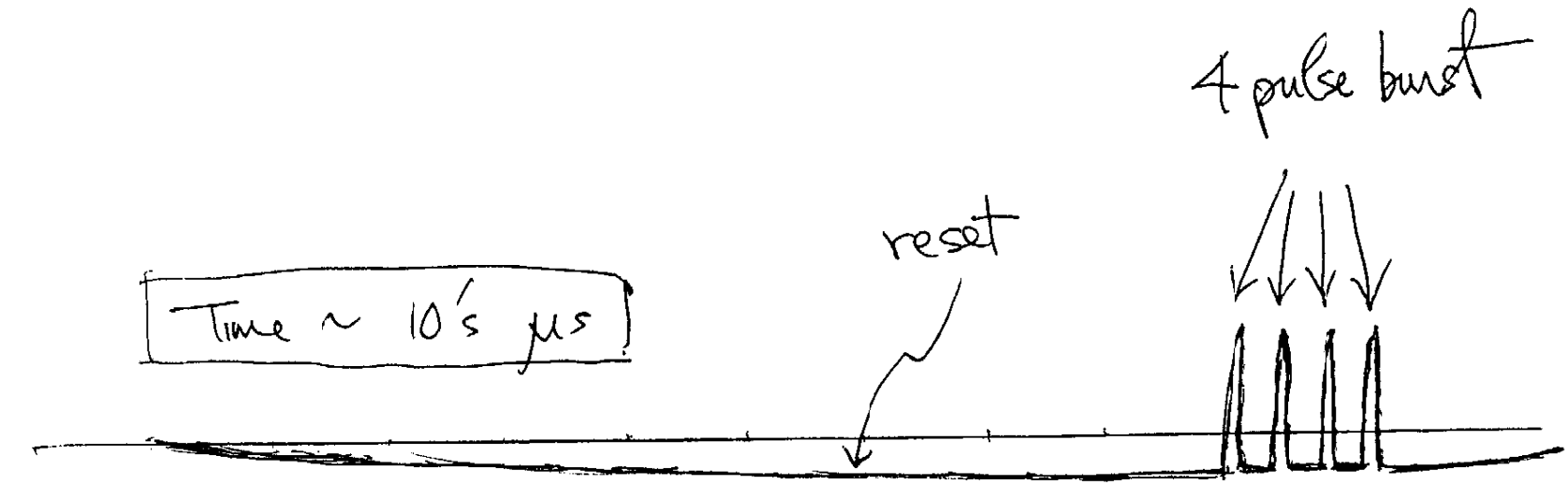

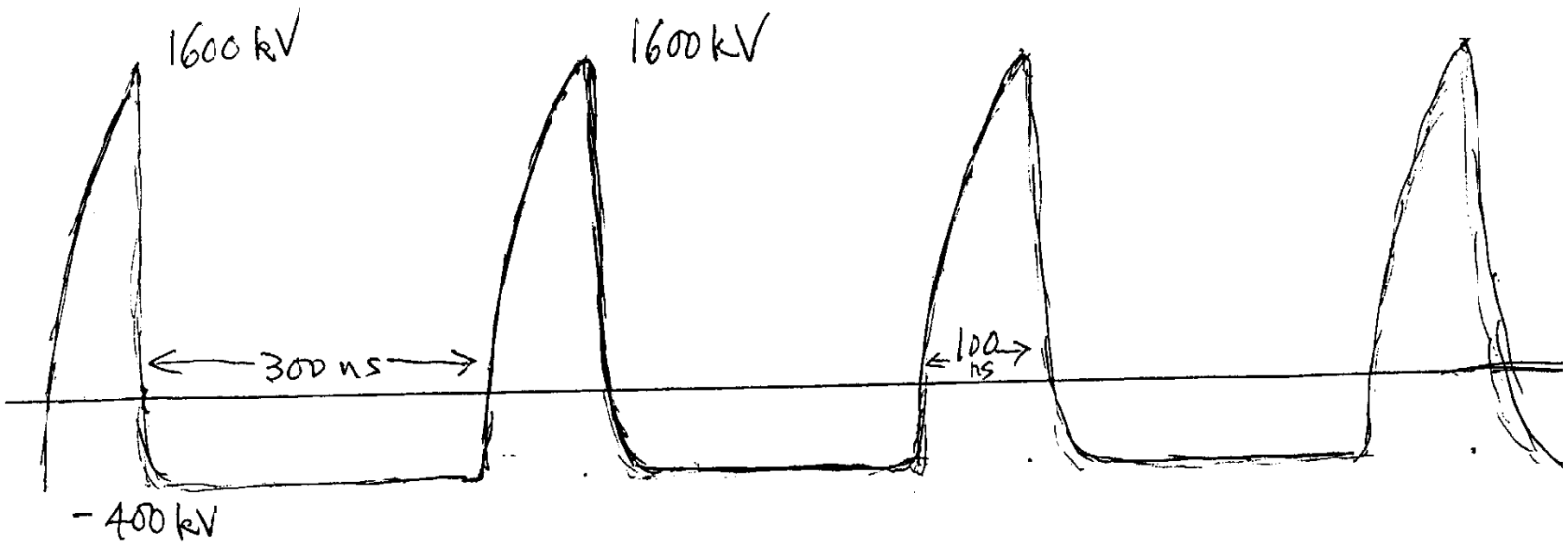

Will solenoidal field affect magnetic core performance?

- DC solenoid may orient magnetic domains along axial direction in between bursts.
- Prior to burst, reset is turned on (10's of μs timescale). The magnetic domains are lined up in the reset configuration independent of prior history, in azimuthal direction
- Pulses are fired. Magnetic domains reversed and driven to saturatio
- DARHT-II experiments (1 kG solenoids in close proximity to the cores) see no effect.

Status (12/14/99)

- Basic architecture selected
- Cost & efficiency trade-off studies ongoing
  - Choice of magnetic material (2605 SC, 2714A, 2705)
    (flux swing, cost, and loss)
  - choice of switching - magnetic switching primary candidate for reliability and efficiency
  - Solenoidal field and bore size
- First cut on preliminary design targeted for end of January
- Report to be completed by March

PROTOTYPE
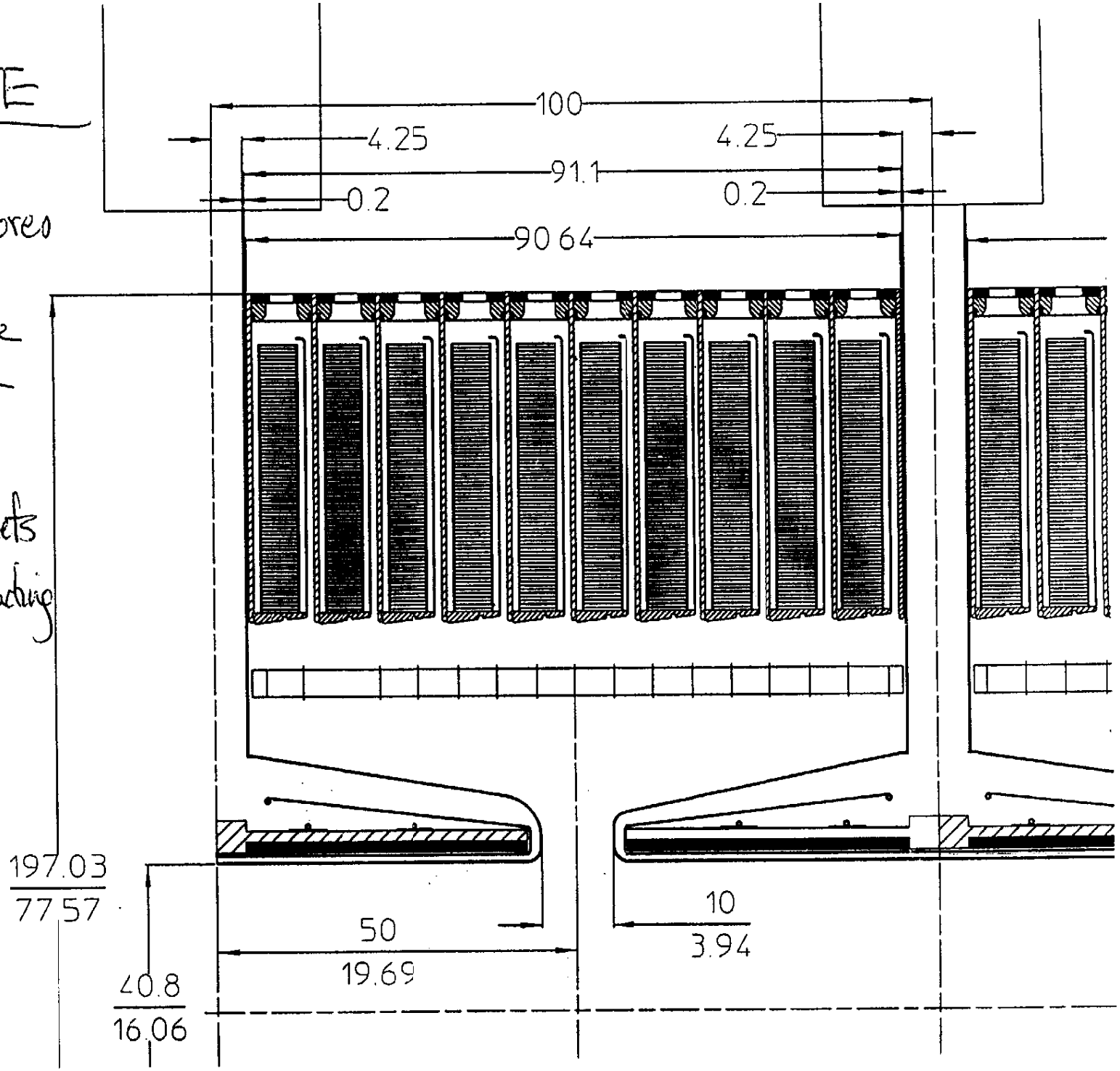
- 1 m of core
- 1 4-pulse power unit
- 1 to 2 sets of superconducting solenoids