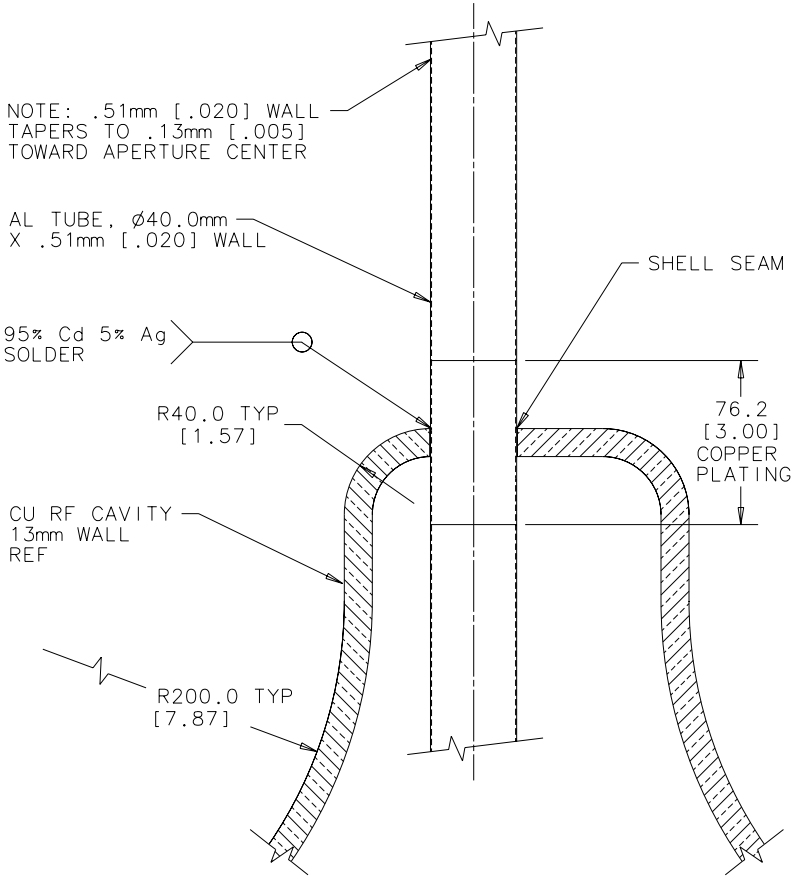

TUBE DETAIL

COPPER PLATING
SCALE: 1:2

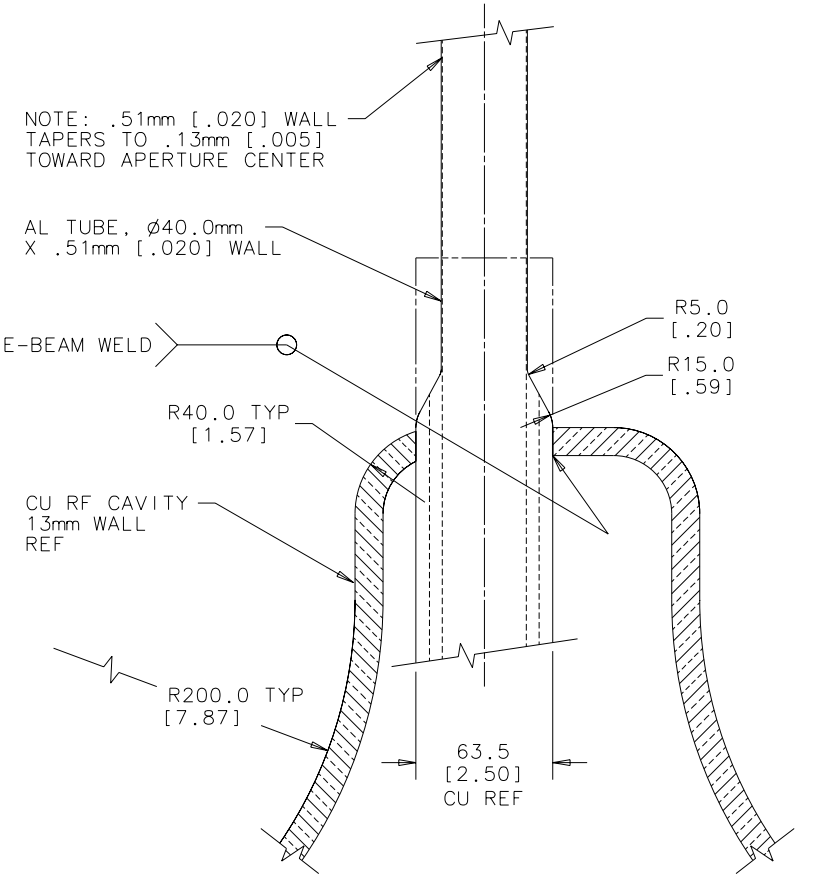

TUBE DETAIL

COPPER PLATING
SCALE: 1:2