REV.	DESCRIPTION	DRAWN	DATE
		APPD.	DATE

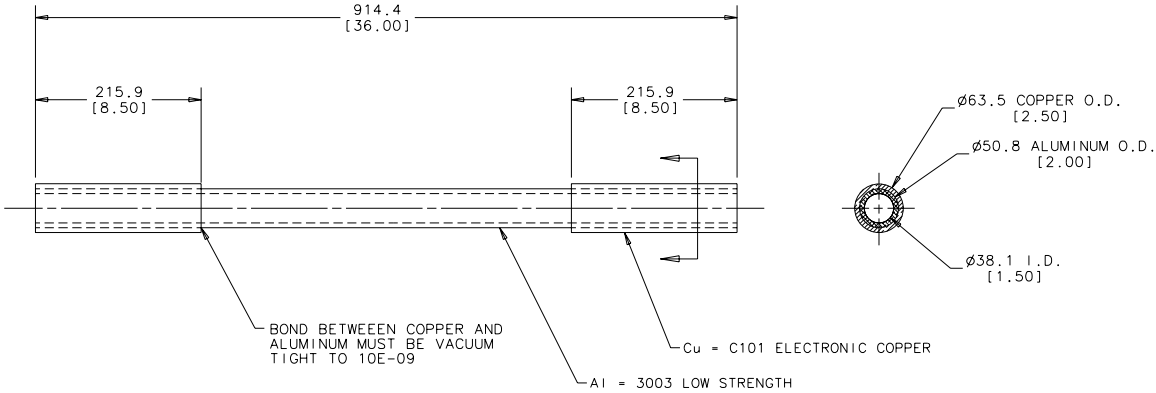

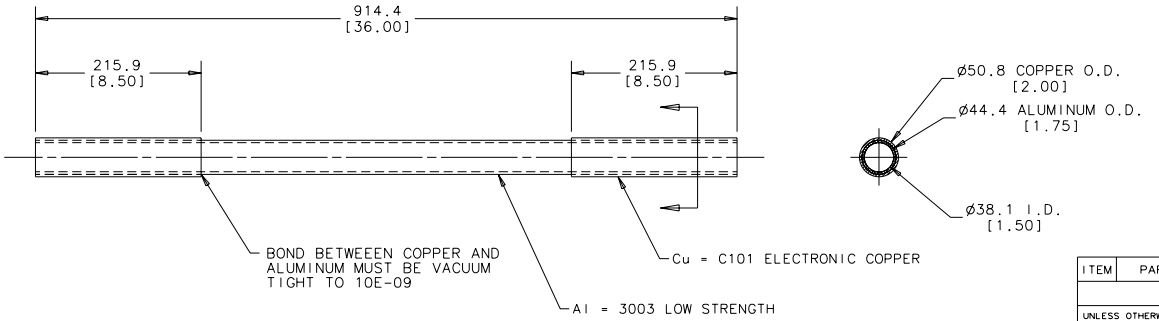

ALTERNATE SIZE TUBING

ITEM	PART NO.	DESCRIPTION OR SIZE	QTY.
PARTS LIST			

UNLESS OTHERWISE SPECIFIED			ORIGINATOR	A. ROWE	12/6/99
METRIC	INCH	ANGLES	DRAWN	P. CRAYTON	12/9/99
± .05	± .002	± .25°	CHECKED		
			APPROVED		

1. BREAK ALL SHARP EDGES 1/64 MAX.
2. DO NOT SCALE DRAWING.
3. DIMENSIONS BASED UPON ANSI Y14.5M-1982
4. MAX. ALL MACH. SURFACES √

USED ON: ME-138220

MATERIAL: COPPER /ALUM BONDED TUBING
2 1/2" O.D. COPPER
2" O.D. ALUMINUM

FERMI NATIONAL ACCELERATOR LABORATORY
UNITED STATES DEPARTMENT OF ENERGY

MUON ACCELERATOR, NEUTRINO R & D
201 MHz RF CAVITY
EXPLOSION BONDED CONCENTRIC TUBING

SCALE	FILMED	DRAWING NUMBER	REV.
1:4		2130.000-MC-138222	

CADFILE: CREATED WITH I-DEAS_VI USER NAME: CRAYTON