Induction Linac Technology for Muon Beam Phase Rotation

J. Fockler, M. Green, C. Kim, R. Lafever,
D. Vanecek, and S. Yu

Feasibility Study Workshop
of a Neutrino Source Based on a Muon Storage Ring

15 February 2000
Fermilab

We are constructing an induction linac point design

- 200 MV (head to tail) in 100 meters
- 15 Hz
- 4 pulses / burst
  - 100 ns pulselength (hyperbolic ramp)
  - 300 ns spacing (beam off time)
- 3×10^8 pulses / year
- 3.0 T (90% packing) at 20 cm bore radius (or equivalent BR^2)

Design Criteria

- Technical feasibility
- Power consumption
- Capital cost
- Reliability

- Commonly asked questions
  - Can the high gradient of 2 MV/m be achieved?
  - Can you generate four closely spaced pulses?
  - What about the interaction of the solenoid field with magnet cores?

Muon Phase Rotator Cell

A Pair of 1 m Long Induction Cells

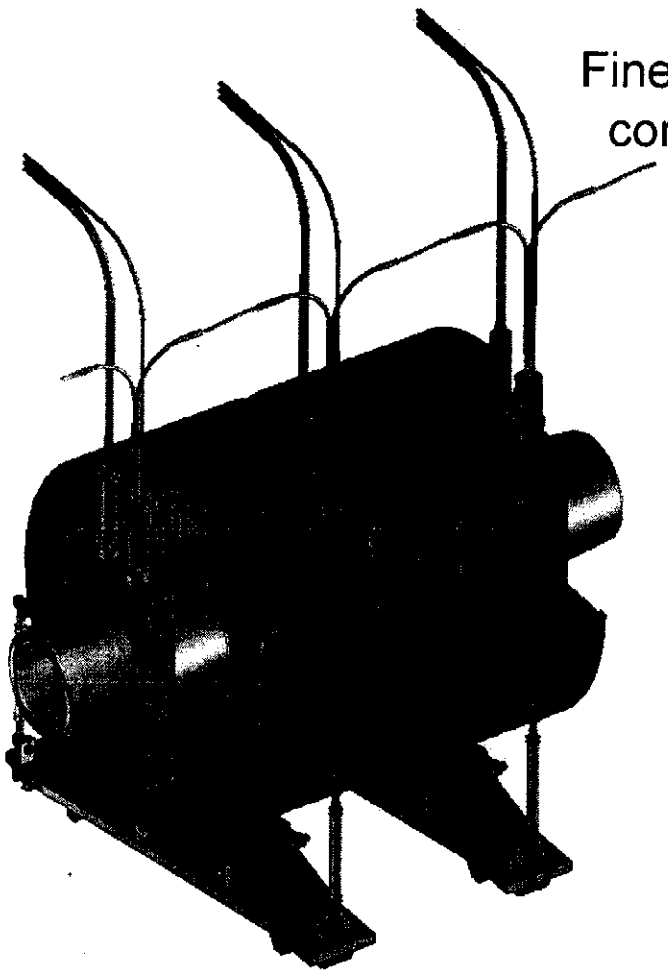

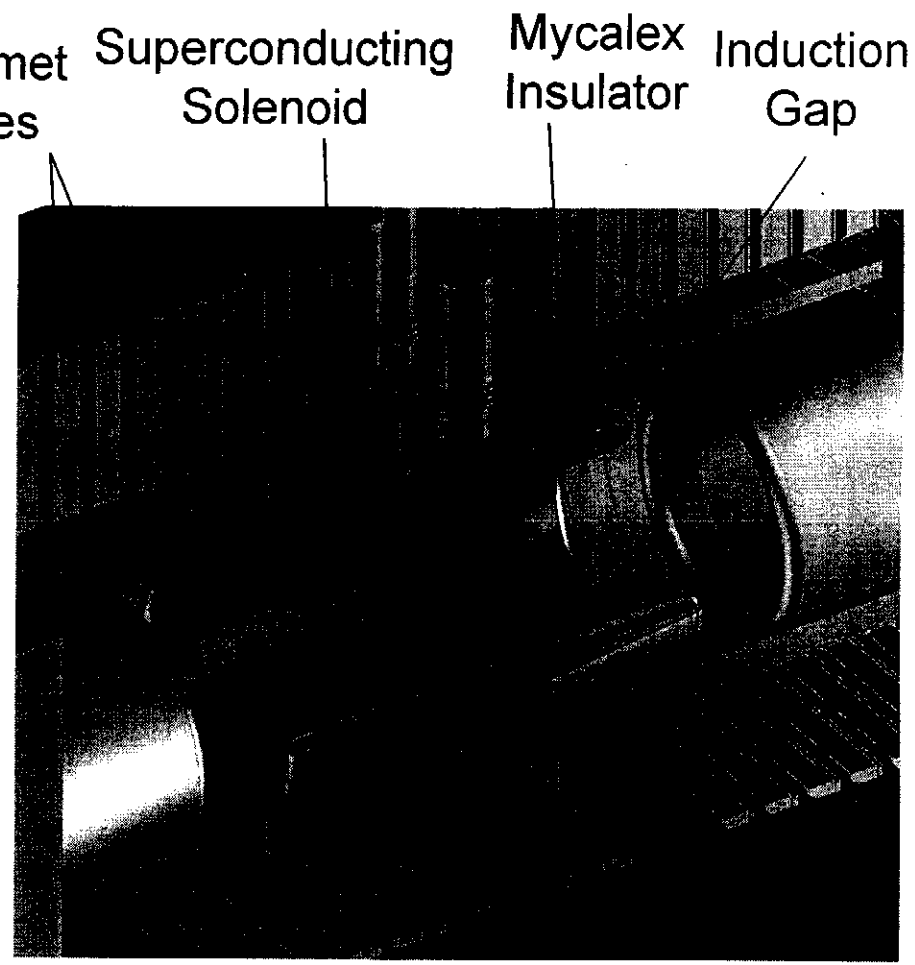

Inter-Cell Cutaway

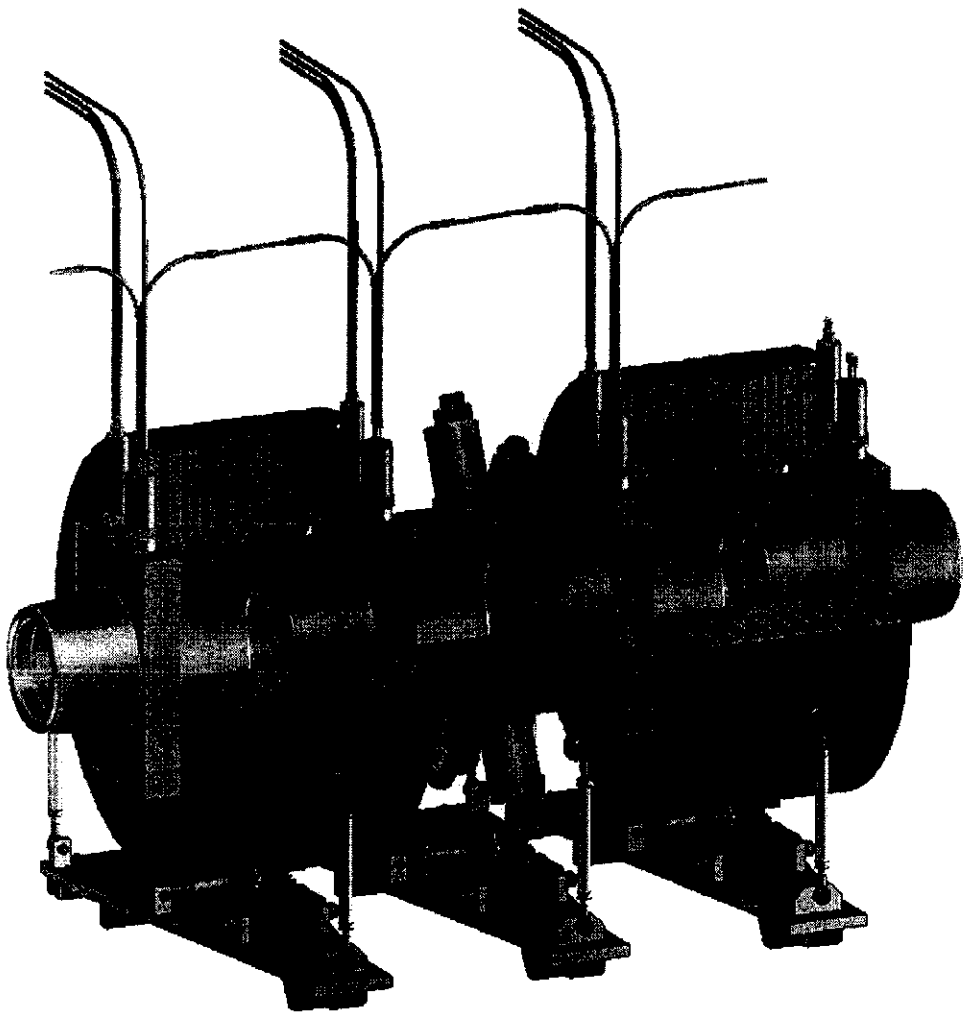

- An Inter-Cell Module is provided every 10 cells for beam line pumping & beam position / current monitors
- A constant solenoid gap pitch is maintained

A Pair of Cell Cores

- Each 2.0 Mev cell contains 10 200 kV cores
- Alternate cores are driven by diametrically opposed cables
- These paired cores are then clocked azimuthally to provide clearance for the pulse shaping network enclosures

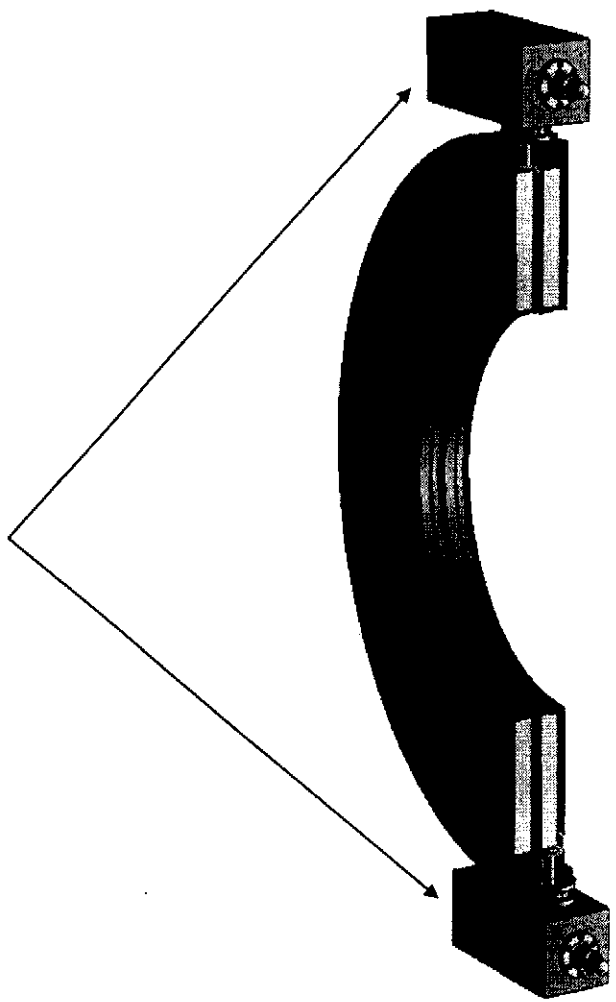

Induction Module Design

- Requirements => Size
  - 20 cm bore radius & 25 cm for B_Z magnet & Insulator => **Core IR = 45 cm**
  - 90% axial packing & allowable electric field stress => **L = 100 cm**
  - From $V * \tau = \Delta B * A$
    - 2 MV hyperbolic ramp for 100 ns => $V\tau$ = 126 mV-s
    - Balancing pulsed power & core cost => ΔB =1.0 T
    - A = 0.13 m2 , PF_r = 0.70, & PF_a = 0.58 => **Core OR = 78 cm**

ΔV	V_{eff}	τ_r	τ_{flat}	τ_{eff}	$V\tau$	Type	δ	PF_r	ΔB_{max}	Cost	
kV	kV	μs	μs	μs	mV-s		gm/cc		T	Norm	
200	**142**	0.070	0.030	**0.07**	**12.6**	**Finemet**	7.32	0.70	**1.95**	**1.00**	**<-- Finemet**
200	**142**	0.070	0.030	**0.07**	**12.6**	**2605SC**	7.32	0.70	**2.90**	**0.36**	**<-- 2605SC**
200	**142**	0.070	0.030	**0.07**	**12.6**	**2605SC**	7.32	0.70	**1.10**	**2.00**	**<-- 2714A**

ΔB	A_{Met}	A_{Core}	$\Delta B/\Delta t$	L		Δr	r_i	r_o	r_o / r_i	r_{Mean}	H	I_{Core}	E_{core}	k	U_{Met}	V_{Met}	W_{Met}	System $
T	cm^2	cm^2	T/μs	"	cm	cm	cm	cm	cm	cm	kA/m	kA	J	J-μs/T-m^3	J/m^3	cm^3	kgm	Norm
0.97	130	185	**13.2**	2.28	5.8	32.0	45	**77**	1.71	61.0	0.65	**2.50**	31.5	**107**	**634**	49670	363.6	**1.00**
0.82	154	220	11.1	2.28	5.8	37.9	45	**83**	1.84	64.0	0.55	**2.23**	28.1	107	454	61744	452.0	1.02
1.48	85	122	20.1	2.28	5.8	21.0	45	66	1.47	55.5	0.98	3.41	42.9	107	1445	29688	217.3	1.07
0.82	154	220	**11.1**	2.28	5.8	38.0	45	**83**	1.84	64.0	0.98	**3.94**	49.6	**282**	**801**	61946	453.4	**1.13**
2.20	57	82	29.8	2.28	5.8	14.1	45	59	1.31	52.1	2.53	8.28	104.4	282	5571	18736	137.1	2.07
0.82	154	220	**11.1**	2.28	5.8	38.0	45	**83**	1.84	64.0	0.37	**1.50**	18.9	**41**	**306**	61946	453.4	**1.35**
0.86	147	209	11.7	2.28	5.8	36.1	46	82	1.79	64.1	0.39	1.59	20.0	41	339	58981	431.7	1.33

Induction Cell Field Stress

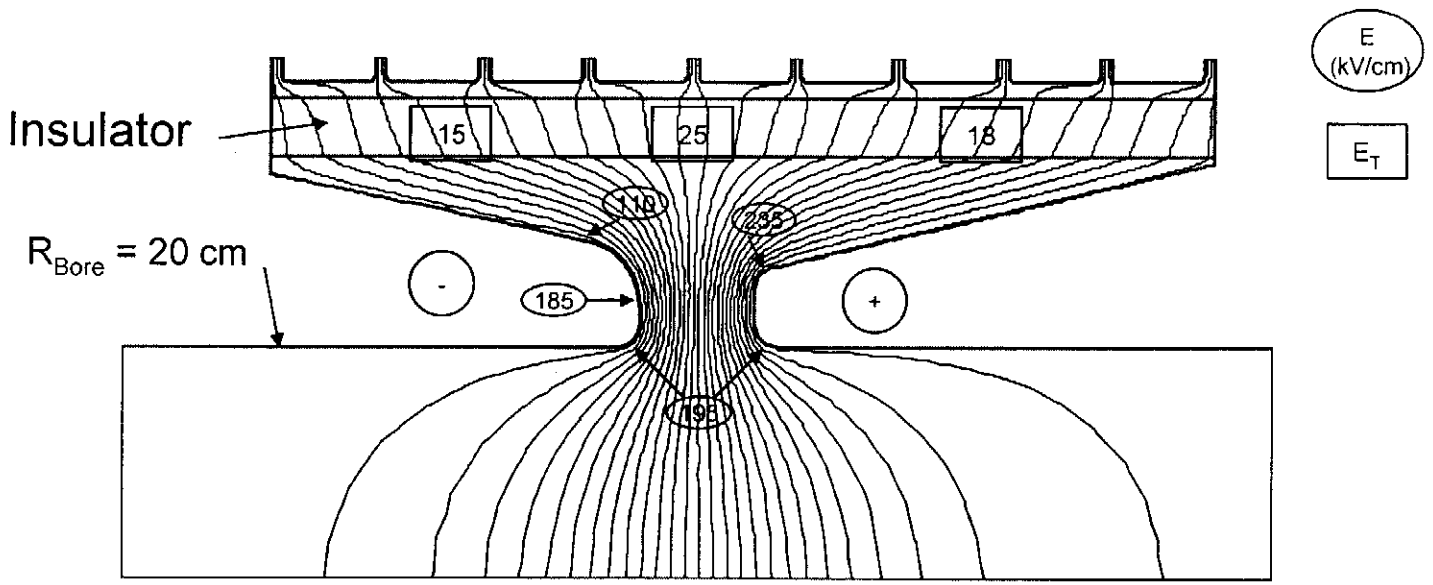

- Field are conservative
  - @ V = 1600 kV
  - 160 kV/cm in Oil
  - 25 kV/cm along insulator
  - 193 kV/cm

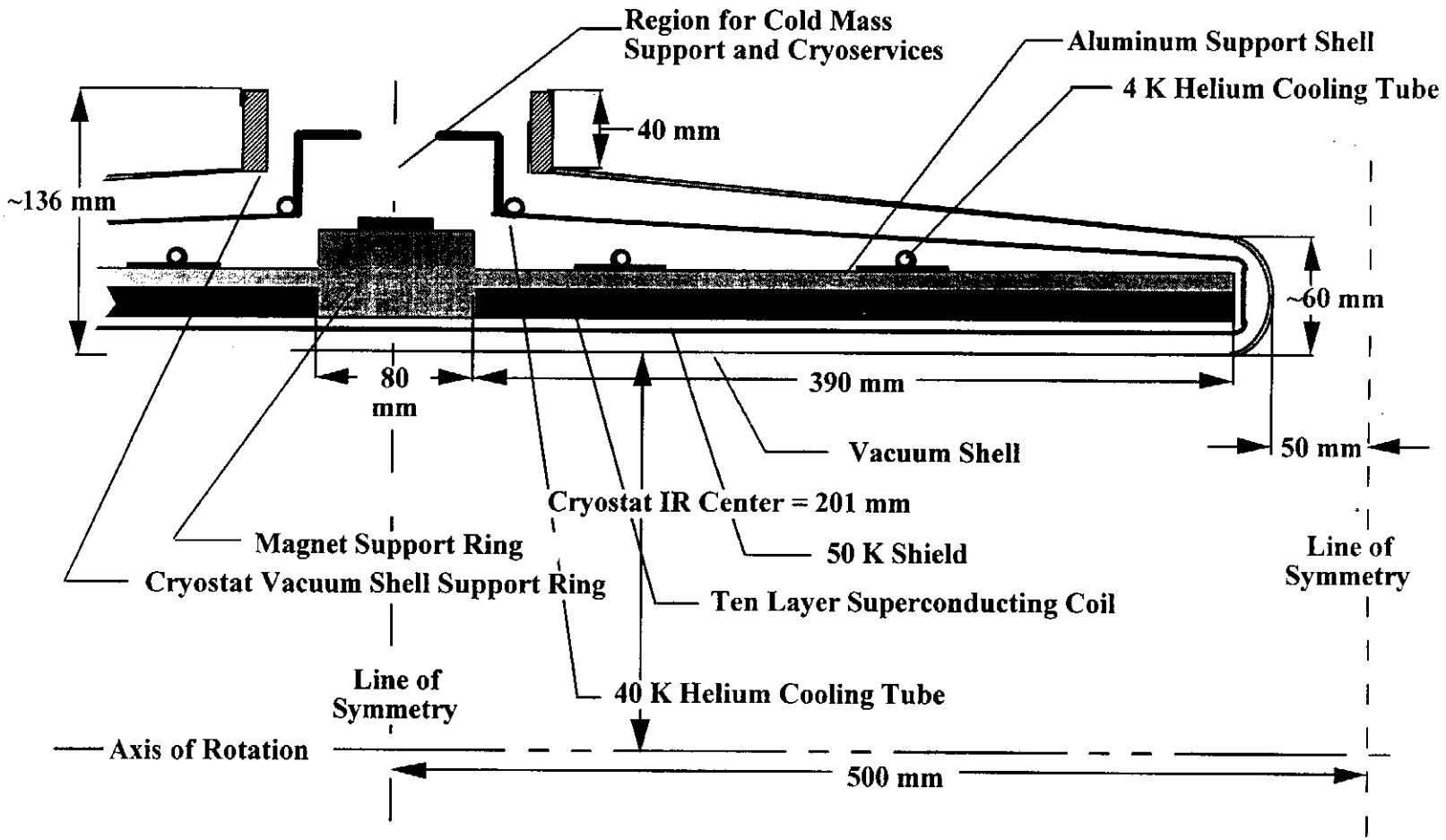

Quarter Section of a 3.0 T Solenoid for the Phase Rotation System

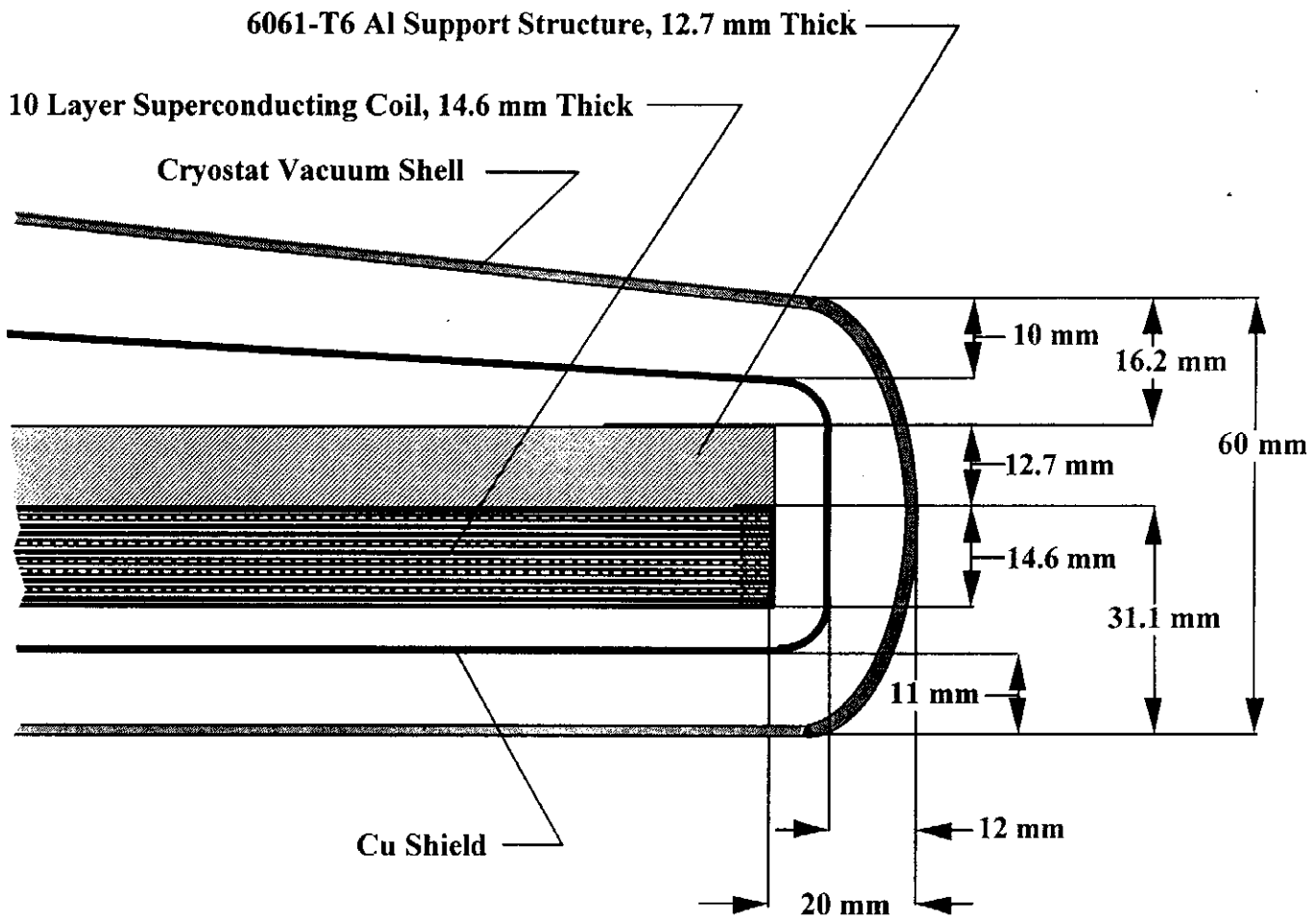

Full Scale End Section of the 3.0 T Phase Rotation Solenoid

Cooling System for an Indivdual Phase Rotation Solenoid

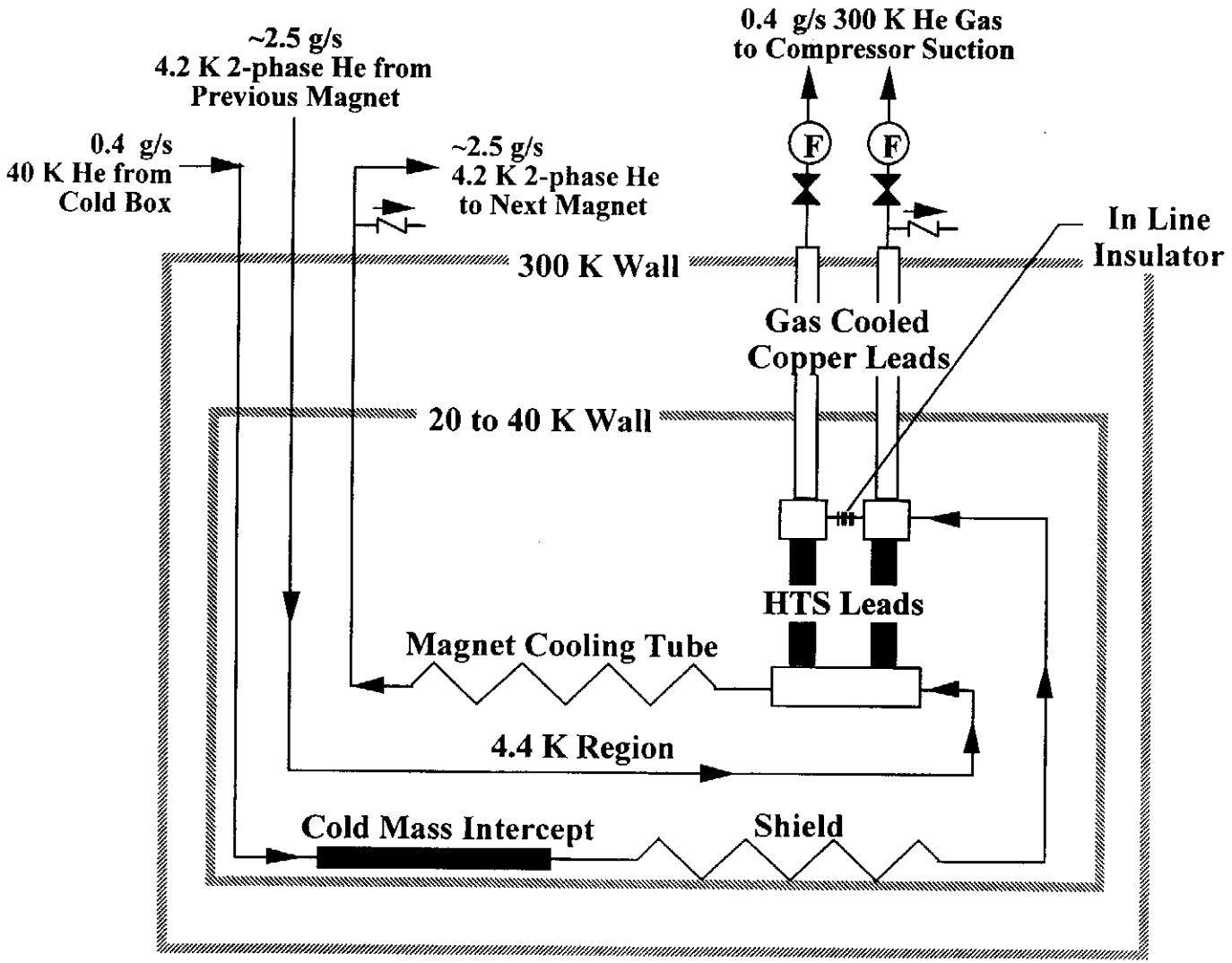

Cryogenic Cooling System for the Phase Rotation Solenoids

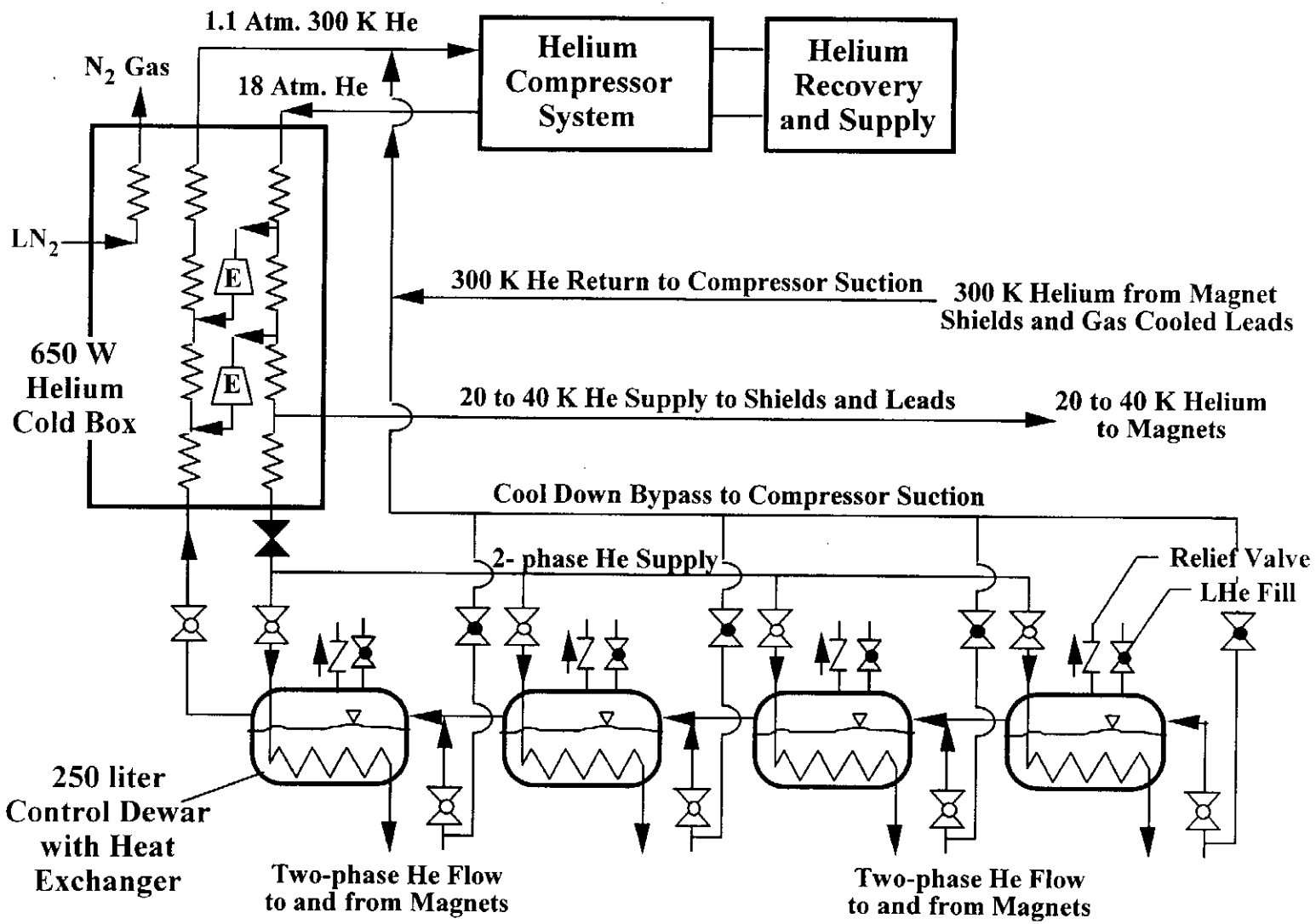

Generation of 4 100 ns Pulses in 1.3 μs made possible by rapid core reset

- An SCR switched 72 μF, 4.0 kV capacitor bank charges a 16.8 μH (2% main pulse droop) reset Inductor to 8.3 kA in 220 μs (dI/dt = 238 A/μs)
- This resets the cell cores (- saturation) to block leakage current from the 4 pulse generator allowing voltage to develop across the accelerating gap
- The + 1.5 MV pulse from the 4 pulse generator drives the core towards + saturation
- When the pulse disappears, the reset current produces -0.5 MV across the , providing rapid reset in preparation for the next pulse
- Without this feature core area would have to be 4 times larger

Three Methods of Creating a Train of Four Pulses

Scheme 1 - Series PFLs

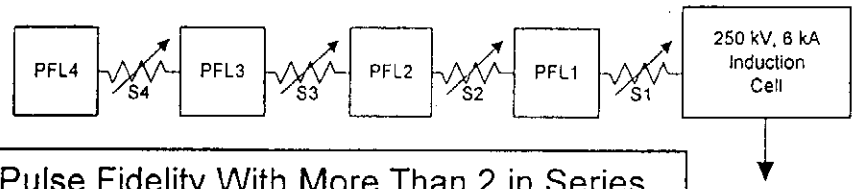

Low Confidence in Maintaining Pulse Fidelity With More Than 2 in Series

Scheme 2 - Series cells

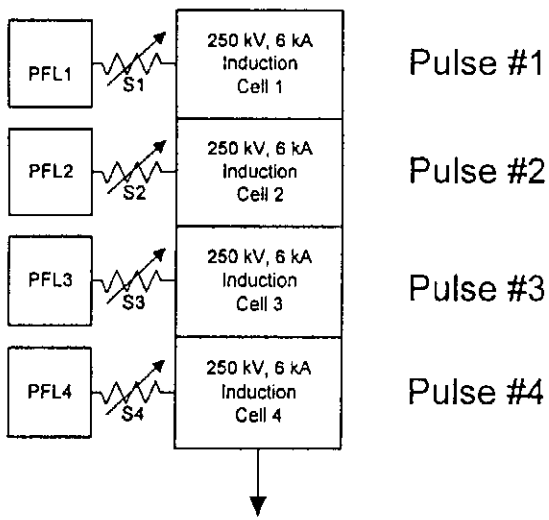

Pulse Distortion Results From Passing Beam Through Unenergized Cells; Longer Accelerator

Scheme 3 - Parallel PFLs

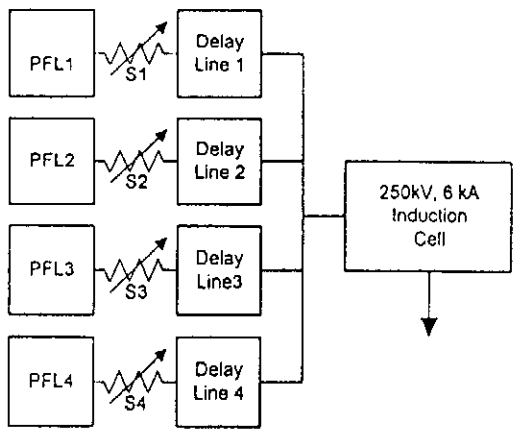

Low Impedance Requires Higher PFL Voltage; Requires Twice As Many Delay Lines.

Predicted Pulses for 4-Pulse Injector

(using Ideal and Normalized Core Models)

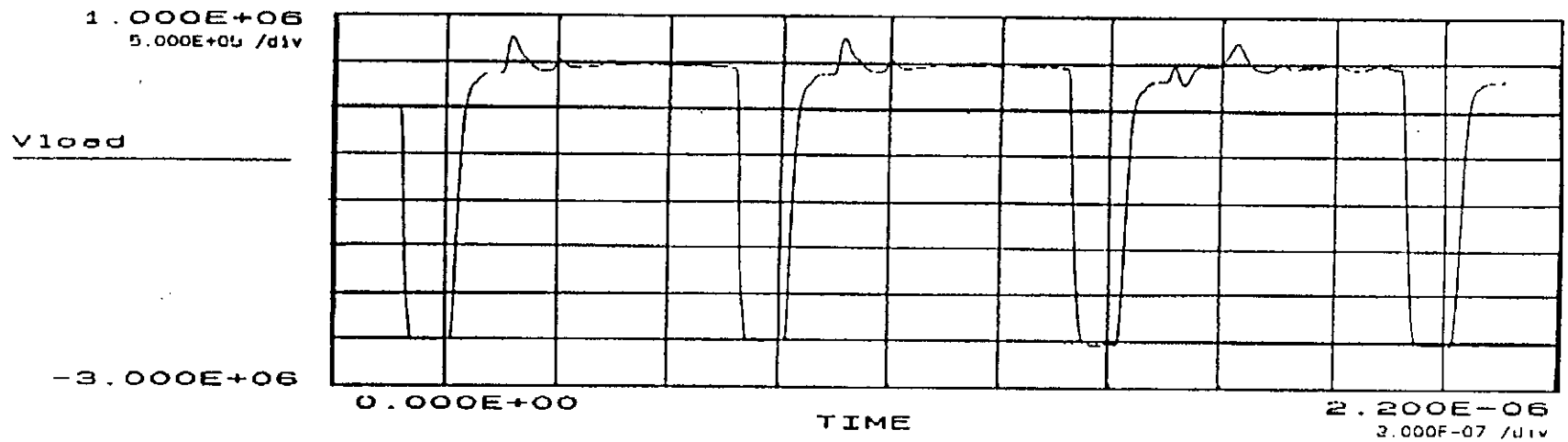

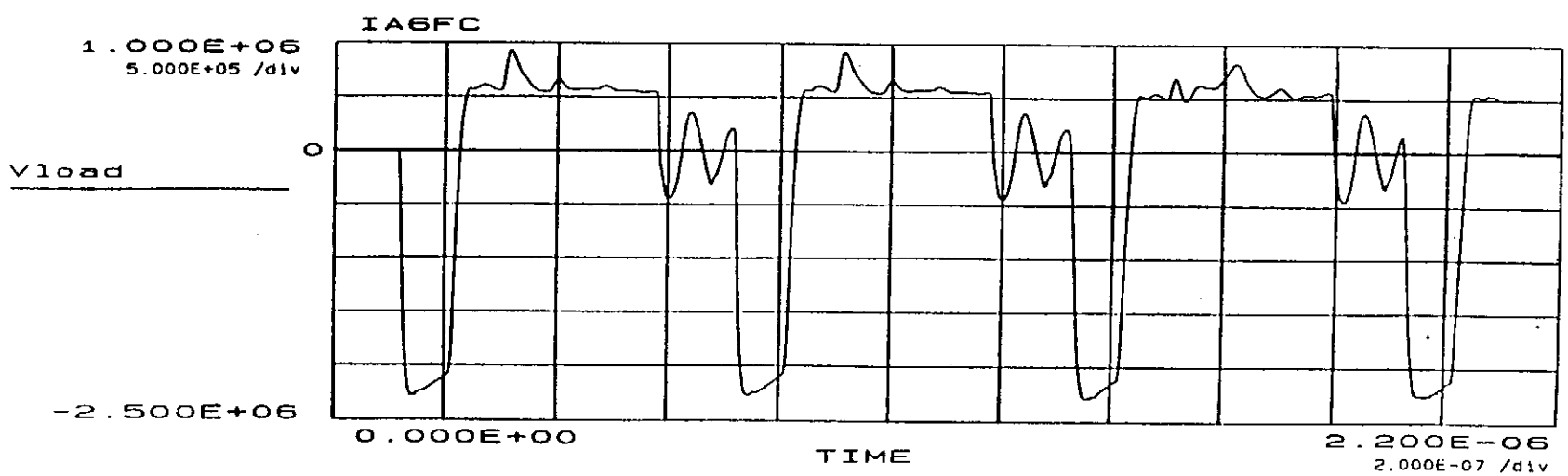

Double PFL Module with Tapered Inners

(Taper of PFL's Corrects for "Droop" of Metglas 2065CO)

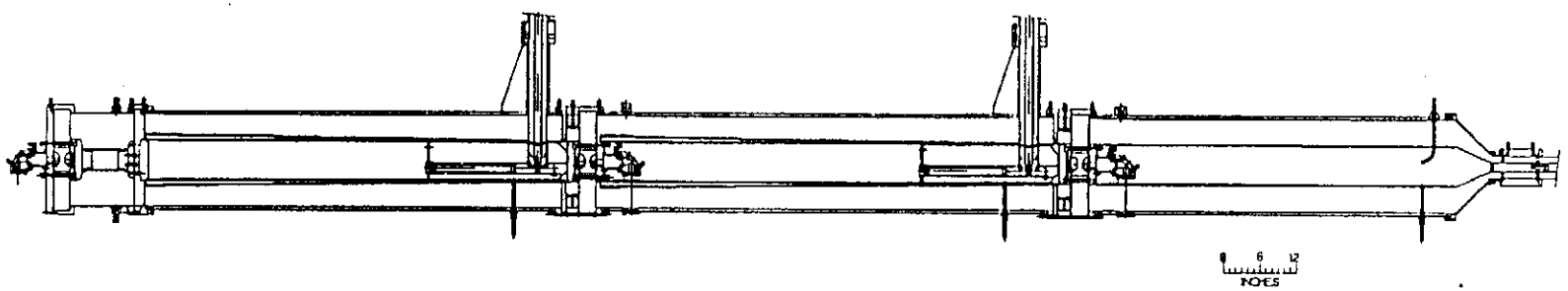

4 Pulse Pulsed Power System
4 Series PFLs

- Switches LS1-LS4 are Saturable Reactors based on SLIA Rep Output Reactor design
- Each PFL
  8.21 nF, 0.56 kJ
  8.0 " OD x 6.1' long

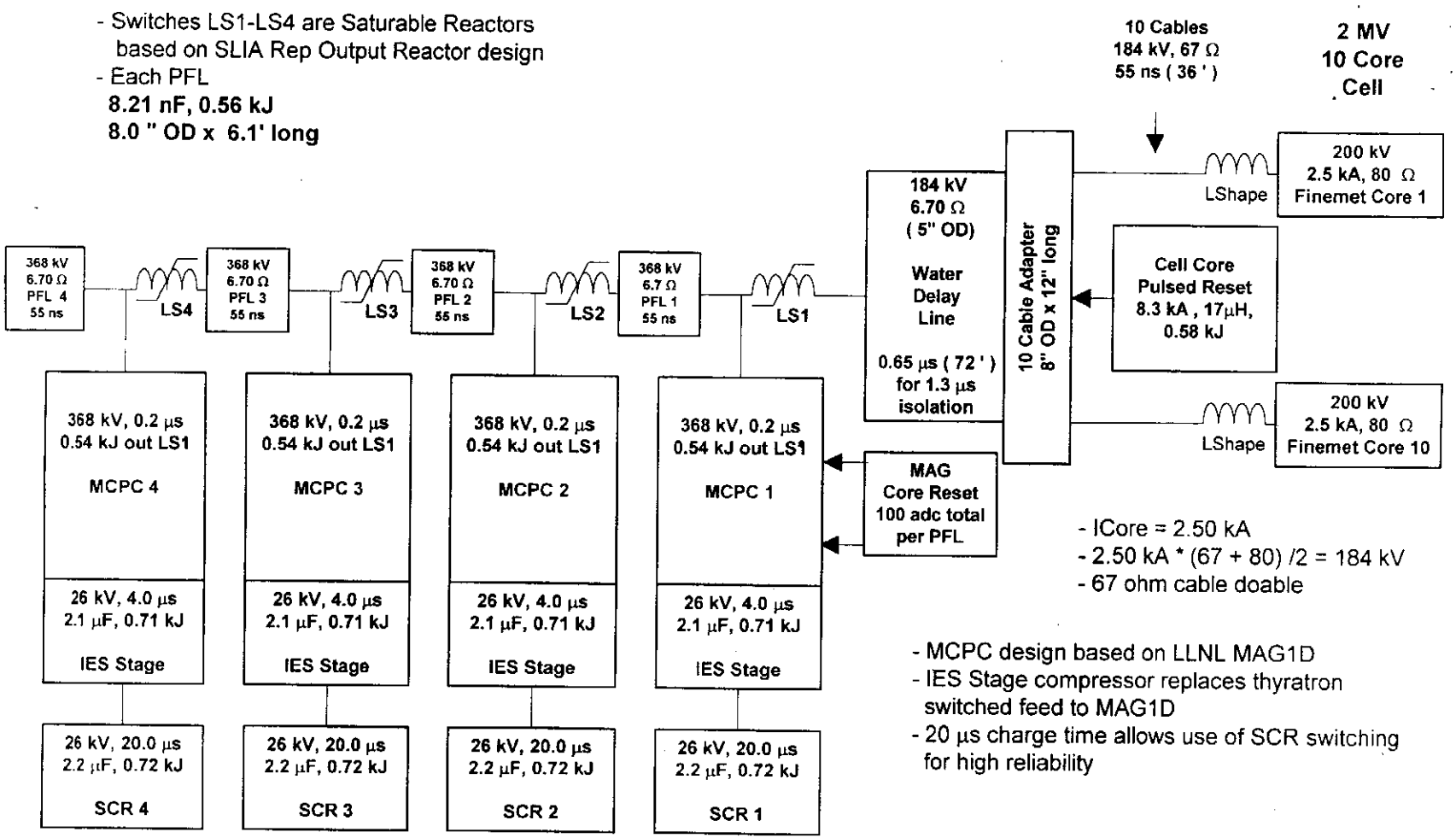

- ICore = 2.50 kA
- 2.50 kA * (67 + 80) /2 = 184 kV
- 67 ohm cable doable

- MCPC design based on LLNL MAG1D
- IES Stage compressor replaces thyratron switched feed to MAG1D
- 20 μs charge time allows use of SCR switching for high reliability

2 MV, 4 Pulse Pulsed Power Layout

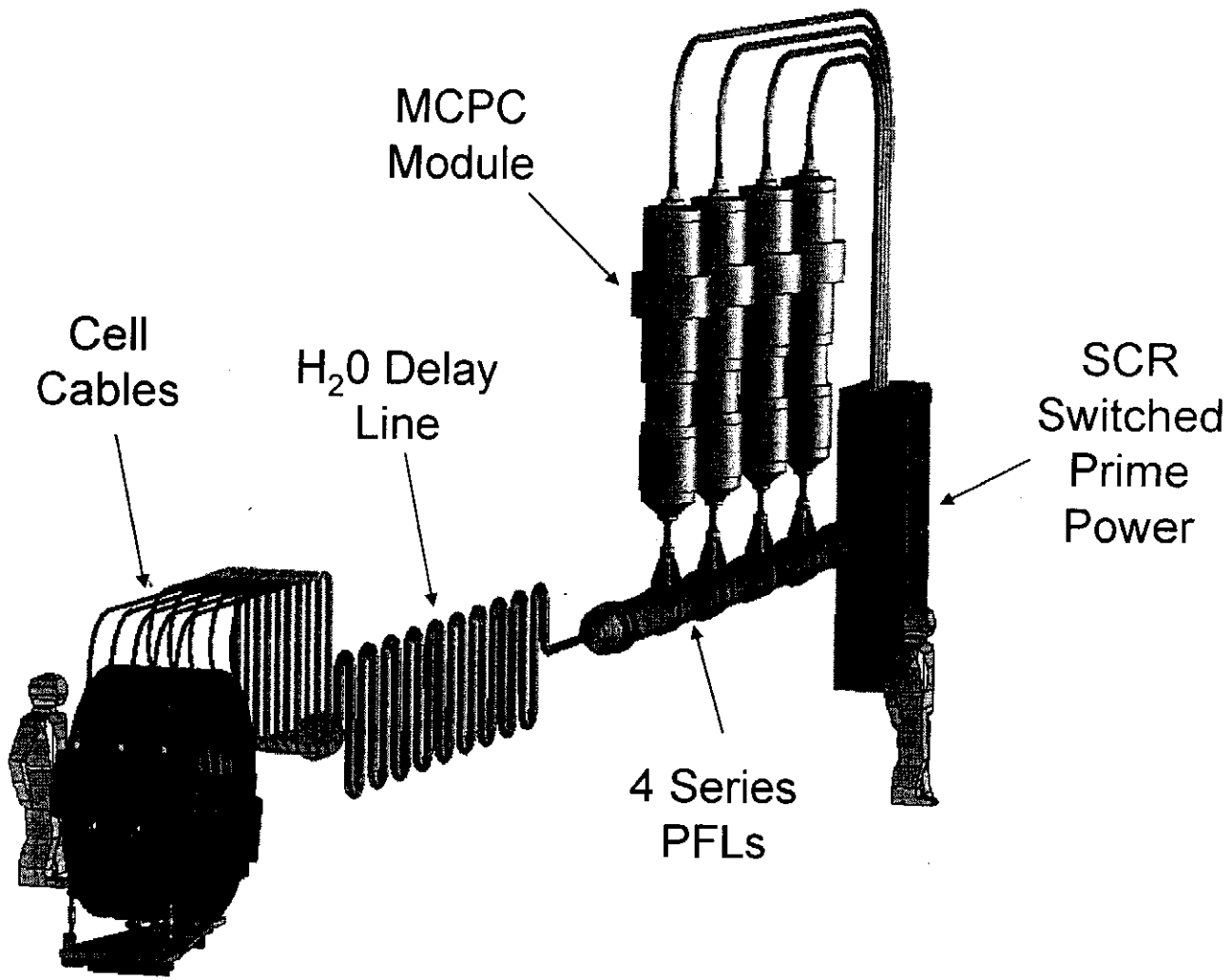

❶ V(13) ❷ v(cell_pra4f Preliminary Simulation of 4 Pulse Train

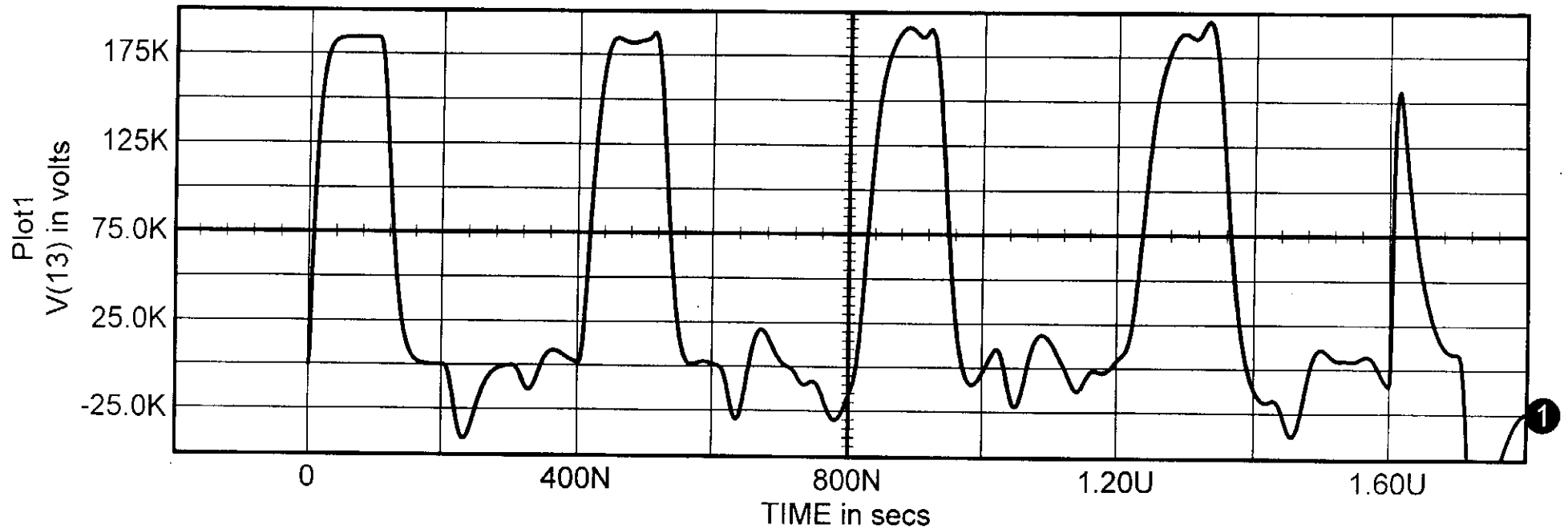

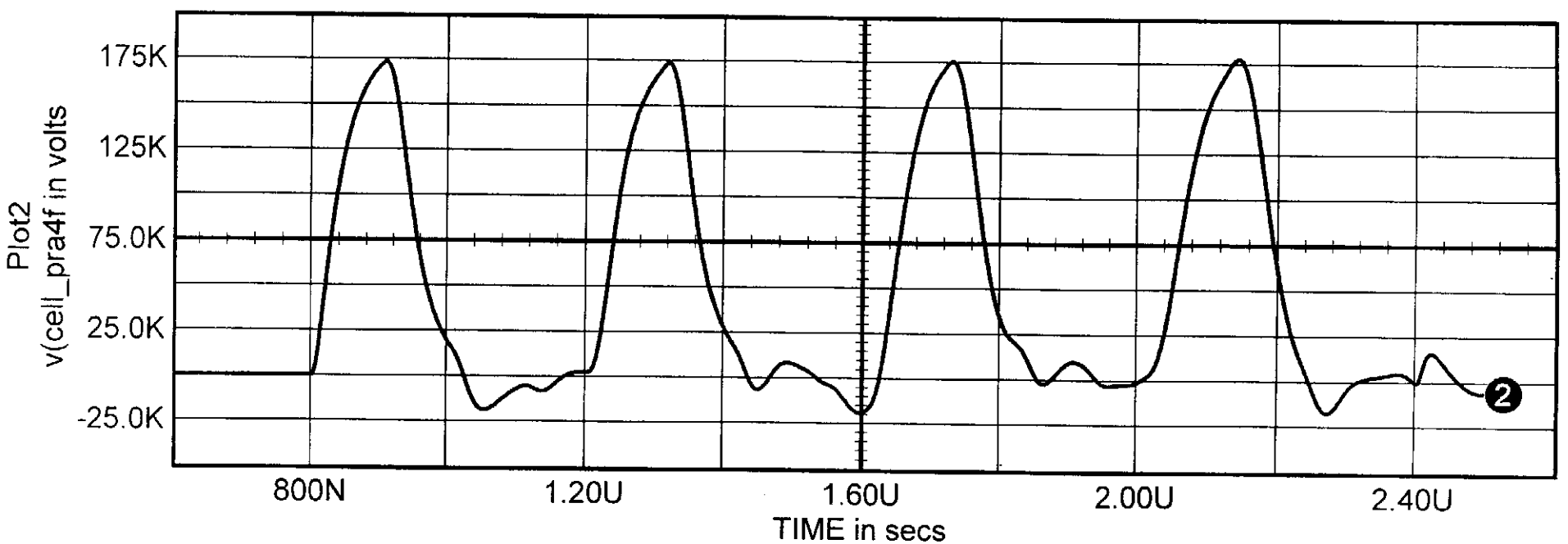

Overlay of 1st & 4th Pulse of Train

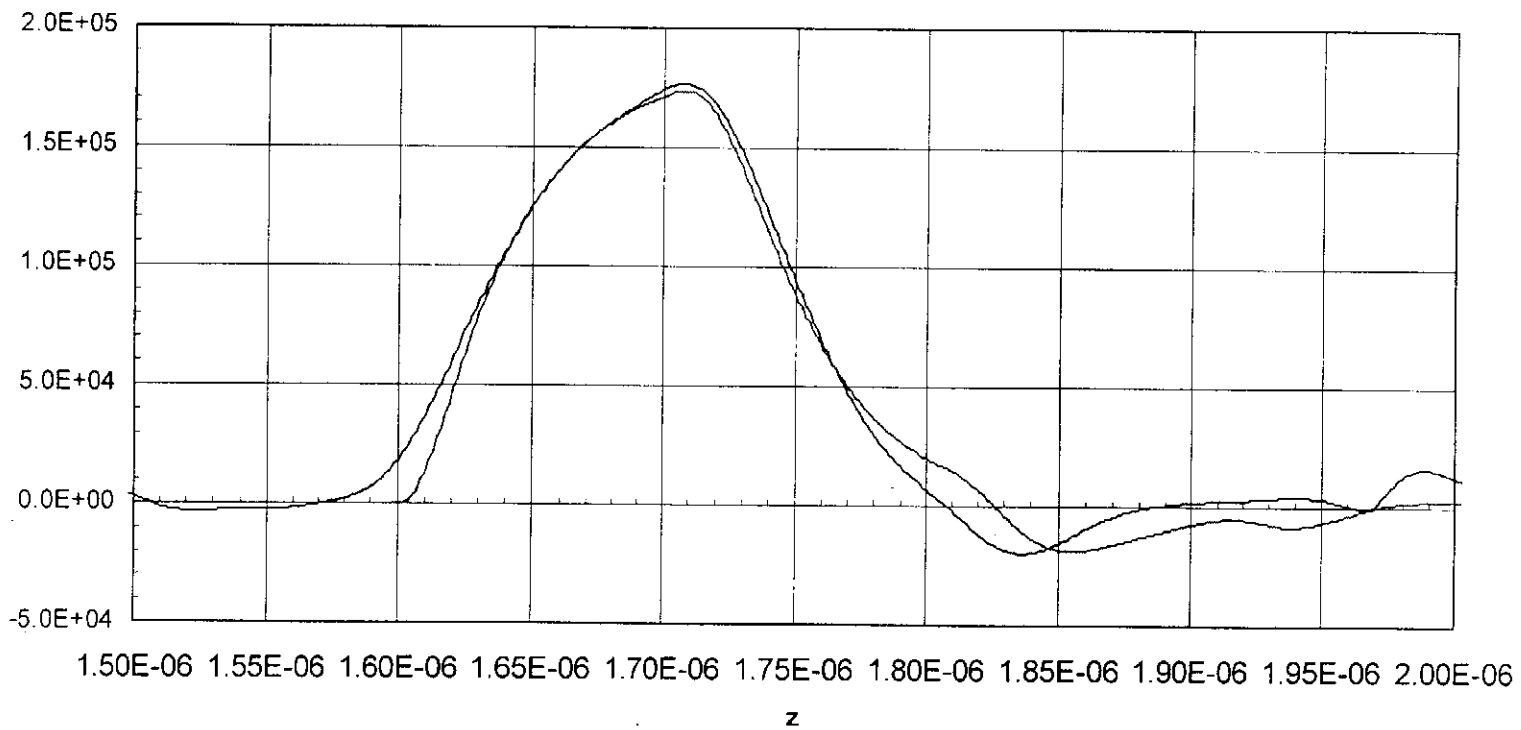

Alternate Pulse Generator Topology

- Switches LS1-LS4 are Saturable Reactors based on SLIA Rep Output Reactor design
- Each PFL
  8.21 nF, 0.56 kJ
  8.0 " OD x 6.1' long

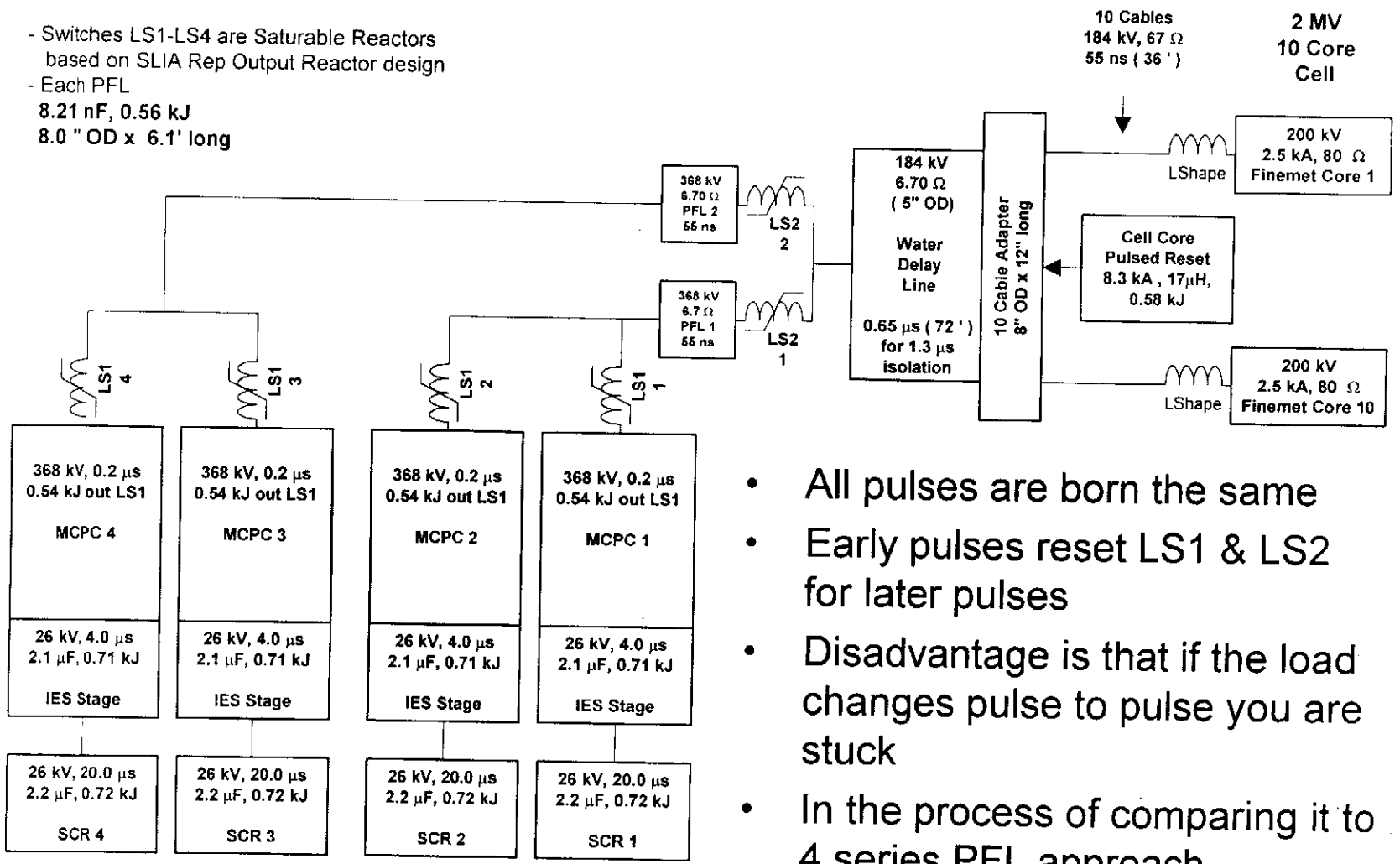

- All pulses are born the same
- Early pulses reset LS1 & LS2 for later pulses
- Disadvantage is that if the load changes pulse to pulse you are stuck
- In the process of comparing it to 4 series PFL approach

SCR Switched Pre-MCPC Power Conditioning

- SCR switches are used to ensure reliable
- 6 series 5SGT 40L4502 Gate turn-off Thyristors manufactured by ABB Semiconductors AG
- They discharge a 2.1 μF, 26 kV cap through a 38 μH inductor to feed the 1st stage of the MCPC in 20 μs
- Individual Thyristor parameters are:

	Rating	Used
V (kV)	4.5	4.5
Irms (kA)	2.5	0.3
dI/dt (kA/μs)	0.71	0.71

Status & Issues

- Conceptual point design nearly complete
- Outstanding Items
  - Need to incorporate into the design a + 0.5 MV, ~ 50 ns Pre-pulse train pulser that provides -0.5 MV starting point for the first pulse of the train
  - Cost estimates to be completed
  - Resolve 100 ns pulsewidth Induction system point design with requirement which varies from < 100 ns (Cell 1) to > 200 ns(Cell 2)
    - 3 to 1 dead time to pulse width constraint => > 1300 ns pulse train width for longer sigle pulse widths
  - Write report

5 Year Program Plan

- Complete testing of a prototype 4 pulse system in 5 years
  - Consists of:
    - 4 Pulse Pulsed Power Module
    - 1 m Induction Cell
    - 2 m of Superconducting Solenoid Magnet
  - Year 1 _ Develop preliminary system design
  - Year 2-3 _ Detailed design and construction
  - Year 4-5 _ Test system
- Year 1 R & D
  - Engineering design of system
    - Further system tradeoffs and optimization
  - Finemet core tests
    - Small core samples (Fermilab provided cores, LBNL pulser)
    - Full size single core (Possibly use DARHT core & LBNL pulser)
  - SCR switch tests