Muon Accelerator Driver
Accelerating Systems

FNAL 15-16 Feb 2000

Jean Delayen (Jlab)

MAD layout

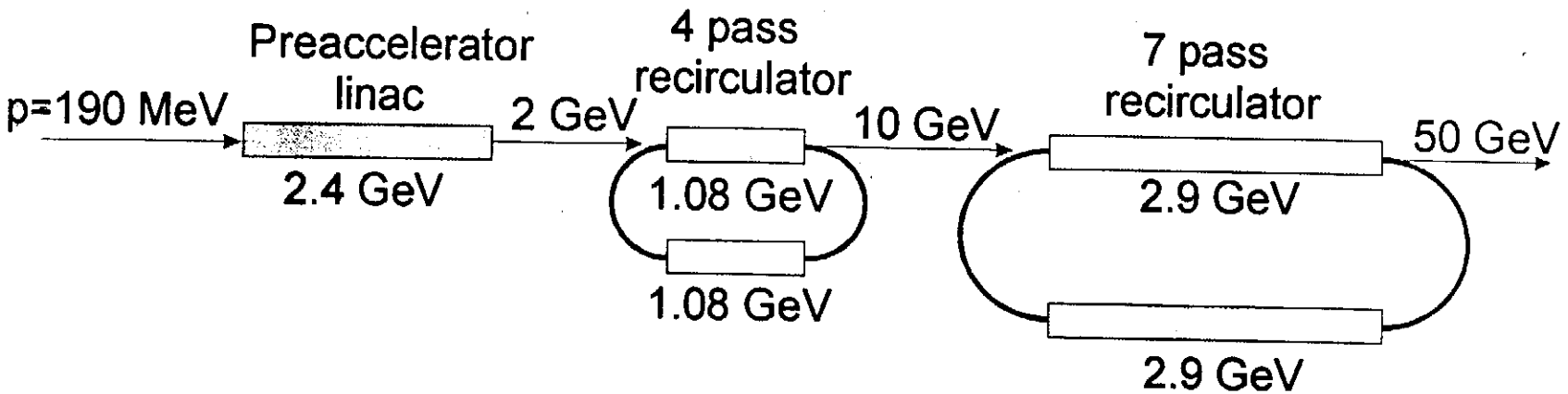
p=190 MeV
Preaccelerator linac
2.4 GeV
2 GeV
4 pass recirculator
1.08 GeV
1.08 GeV
10 GeV
7 pass recirculator
2.9 GeV
2.9 GeV
50 GeV

Basic MAD Parameters

Injection momentum/Kinetic energy	190/112 MeV
Final energy	50 GeV
Initial rms normalized emittance,	1500 mm·mrad
Initial rms energy spread	0.11
Initial rms bunch length	12 cm
Number of bunches per pulse	30
Number of particles per bunch/per pulse	10^{11} / $3 \cdot 10^{12}$
Bunch frequency/Accelerating frequency	200/200 MHz
Repetition rate	15 Hz
Beam current in micropulse	3.2 A
Beam Power	360 kW

Main parameters for the first recirculator

Initial energy	2 GeV
Final energy	10 GeV
Number of passes	4
Total initial energy acceptance	±5.6%
Total final energy acceptance	±2.6%
Initial transverse acceptance	500 mm·rad
Final transverse acceptance	130 mm·rad
Emittance delusion	30%
Total voltage per linac	1.08 GV
Circumference	680 m

Main parameters for the main recirculator

Initial energy	10 GeV
Final energy	50 GeV
Number of passes	7 (≤7 ?)
Total initial energy acceptance	±2.6%
Total final energy acceptance	±0.6%
Initial transverse acceptance	130 mm·rad
Final transverse acceptance	34 mm·rad
Emittance delusion	30%
Total voltage per linac	2.9 GV
Circumference	~2-3 km

Assumptions

- 200 MHz cavities
  - Cell length: 0.75m
- 15 MV/m
  - Voltage: 11.25 MV/cell
  - Energy content: 1000 J/cell
- $Q_0 = 10^{10}$, R/Q = 100 Ω/cell
  - Power Dissipation (CW): 127 W/cell

Dynamic loads

- Preaccelerator: 2.4 GeV installed voltage
  - 213 cells
  - 27.1 kW at 4.2 K for cw operation

- First RLA: 2.16 GeV installed voltage
  - 192 cells
  - 24.4 kW at 4.2 K for cw operation

- Second RLA: 5.8 GeV installed Voltage
  - 516 cells
  - 65.5 kW at 4.2 K for cw operation

Energy Extracted by the Beam in 2nd RLA

- Charge/pulse:

  $3\ 10^{12} \times 1.6\ 10^{-19} = .48\ 10^{-6}$ C

- Energy extracted/cell for

  $.48\ 10^{-6}$ C x 11.25 MV x 7 = 37.8 J

- Droop in Cell Energy Content

  37.8 / 1000 = 4%

- Droop in Voltage Gain from Beginning to End of Pulse: 2%

Power Requirements

- Average beam-loading current
  - .48 μC x 15 Hz x 7 = 50 μA
- Average power extracted by the beam
  - 50 μA x 11.25 MV = 560 W

- Power to control microphonics and detuning
  - $P = U \Delta\omega$
  - $P = 1000\ J \times 2\pi \times 25\ Hz = 160\ kW$

C-LINE #62027
CLEAR TOPPER

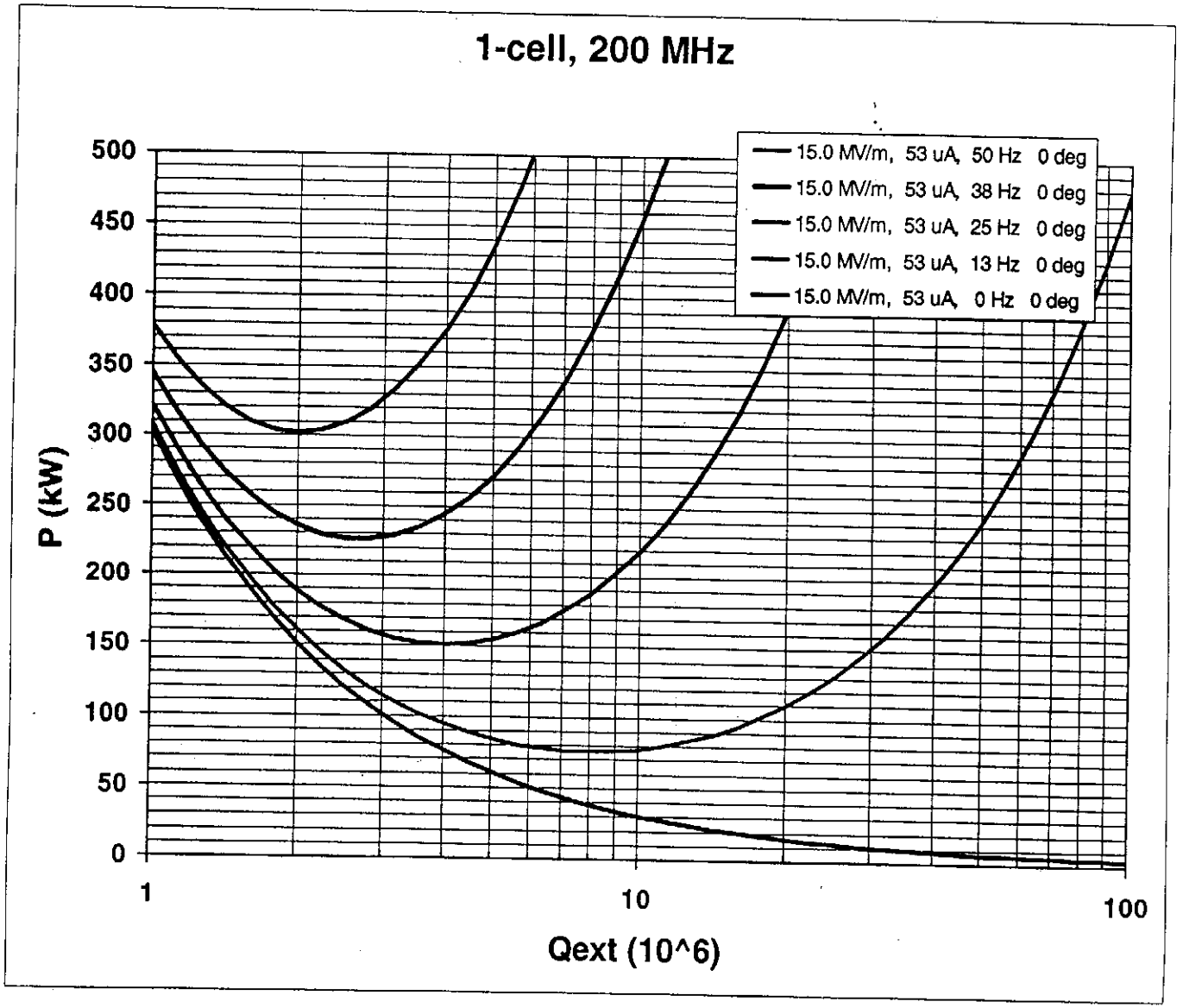
1-cell, 200 MHz
15.0 MV/m, 53 uA, 50 Hz 0 deg
15.0 MV/m, 53 uA, 38 Hz 0 deg
15.0 MV/m, 53 uA, 25 Hz 0 deg
15.0 MV/m, 53 uA, 13 Hz 0 deg
15.0 MV/m, 53 uA, 0 Hz 0 deg
P (kW)
500
450
400
350
300
250
200
150
100
50
0
1
10
100
Qext (10^6)

Duty Cycle and Dynamic Cryogenic Load

- With 250 kW/cell, $Q_{opt} = 2.5\ 10^6$
- Fill time: $2\ Q/\omega = 4$ msec
- Duty cycle : $4\ 10^{-3}$ s x 15 Hz $= 6\ 10^{-2}$
- Dynamic load for preaccelerator and both RLA

  $(27.1 + 24.4 + 65.5)\ 6\ 10^{-2} = 7$ kW

C-LINE #62027
CLEAR TOPPER

Conclusions

- Using modestly long (4 msec) rf pulses and relying on the stored energy allows the use of state of the art power couplers (250 kW) with only a small penalty on the cryogenic load (twice static load)
- In this scheme, the rf power is determined by the rf control system (control of the static and dynamic detuning)