Liquid Hydrogen Windows: Material and Fabrication Issues

D. J. Summers and M. A. Reep

University of Mississippi–Oxford

MUON/MUCOOL/MICE Meeting
71-264 (A. Ghiorso Conference Room)
Lawrence Berkeley National Lab
Berkeley, California
21–26 October 2002

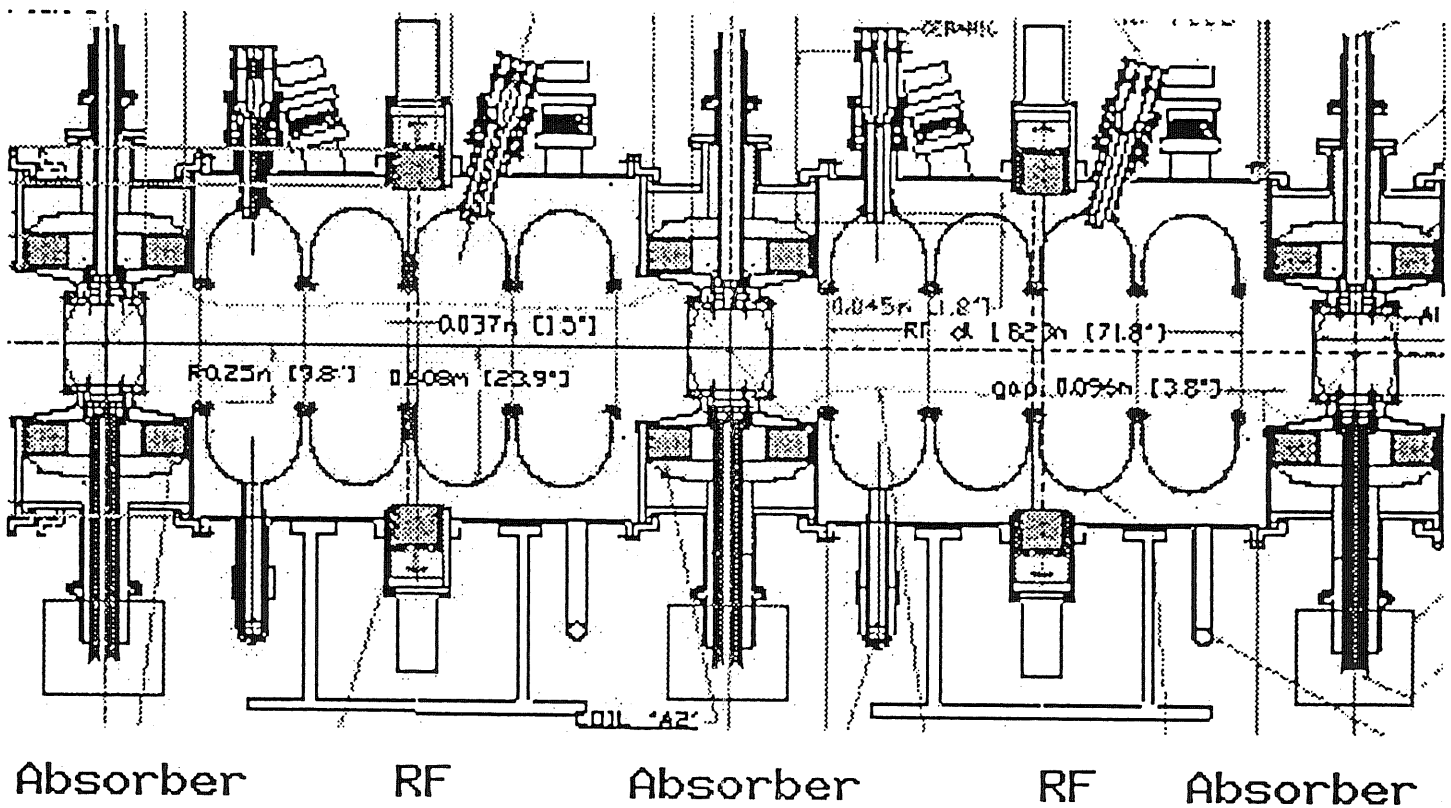

Fig. 1. SFOFO cooling channel design. A 5.5 m long section is shown, consisting of two 200 MHz four-cell cavities interleaved with three liquid hydrogen absorbers.

$$\frac{d\epsilon_n}{ds} = -\frac{1}{\beta^2}\frac{dE_\mu}{ds}\frac{\epsilon_n}{E_\mu} + \frac{1}{\beta^3}\frac{\beta_\perp(0.014\,\mathrm{GeV})^2}{2E_\mu m_\mu L_R},$$

where s is the path length, E_μ the muon energy, L_R the radiation length of the absorber medium, $\beta = v/c$, and $\beta_\perp$ is the betatron function of the beam (where the size of the beam is given by $\sigma_x = \sigma_y = \sqrt{\epsilon_n \beta_\perp / \beta\gamma}$).

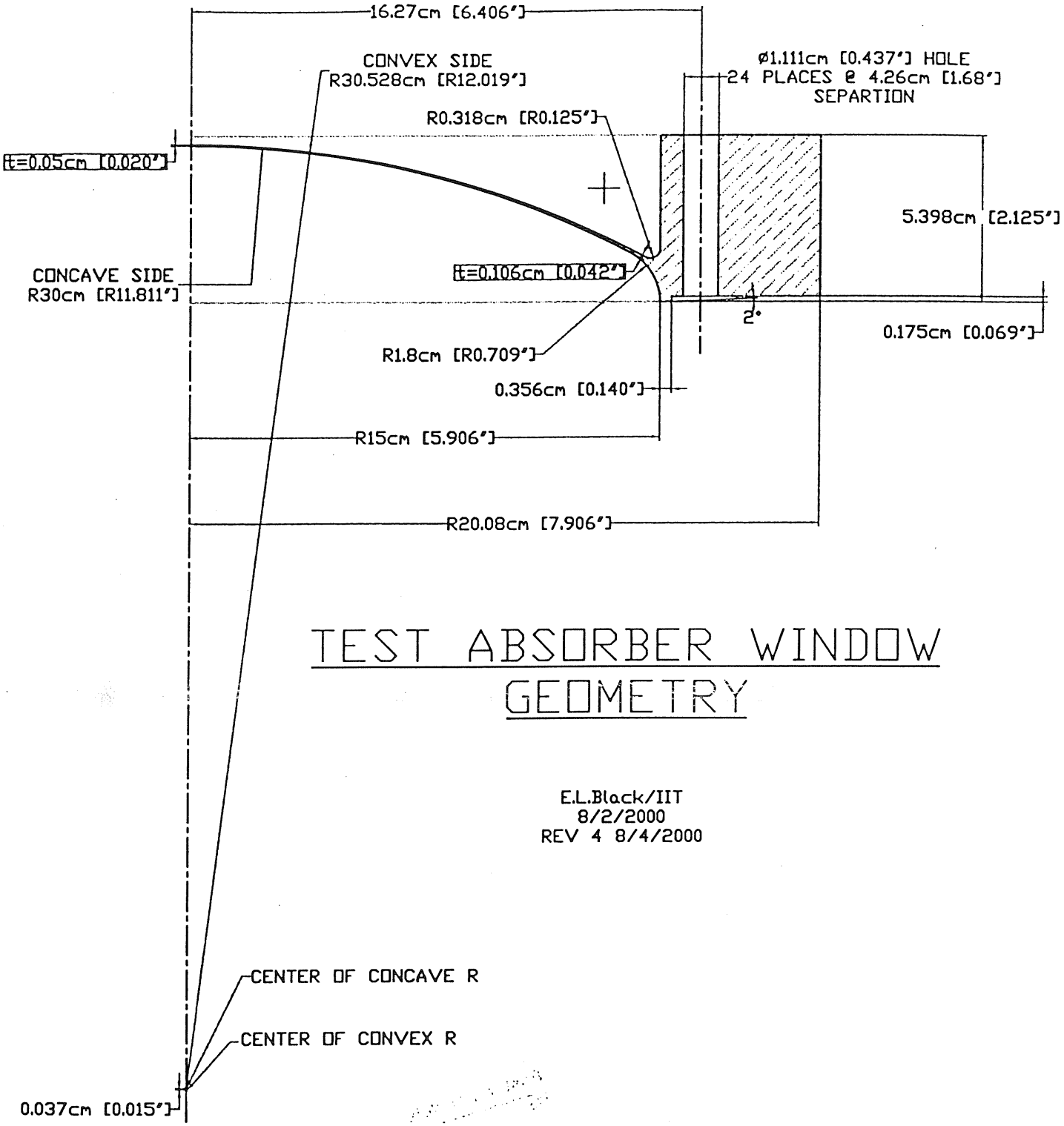

TEST ABSORBER WINDOW GEOMETRY

E.L.Black/IIT
8/2/2000
REV 4 8/4/2000

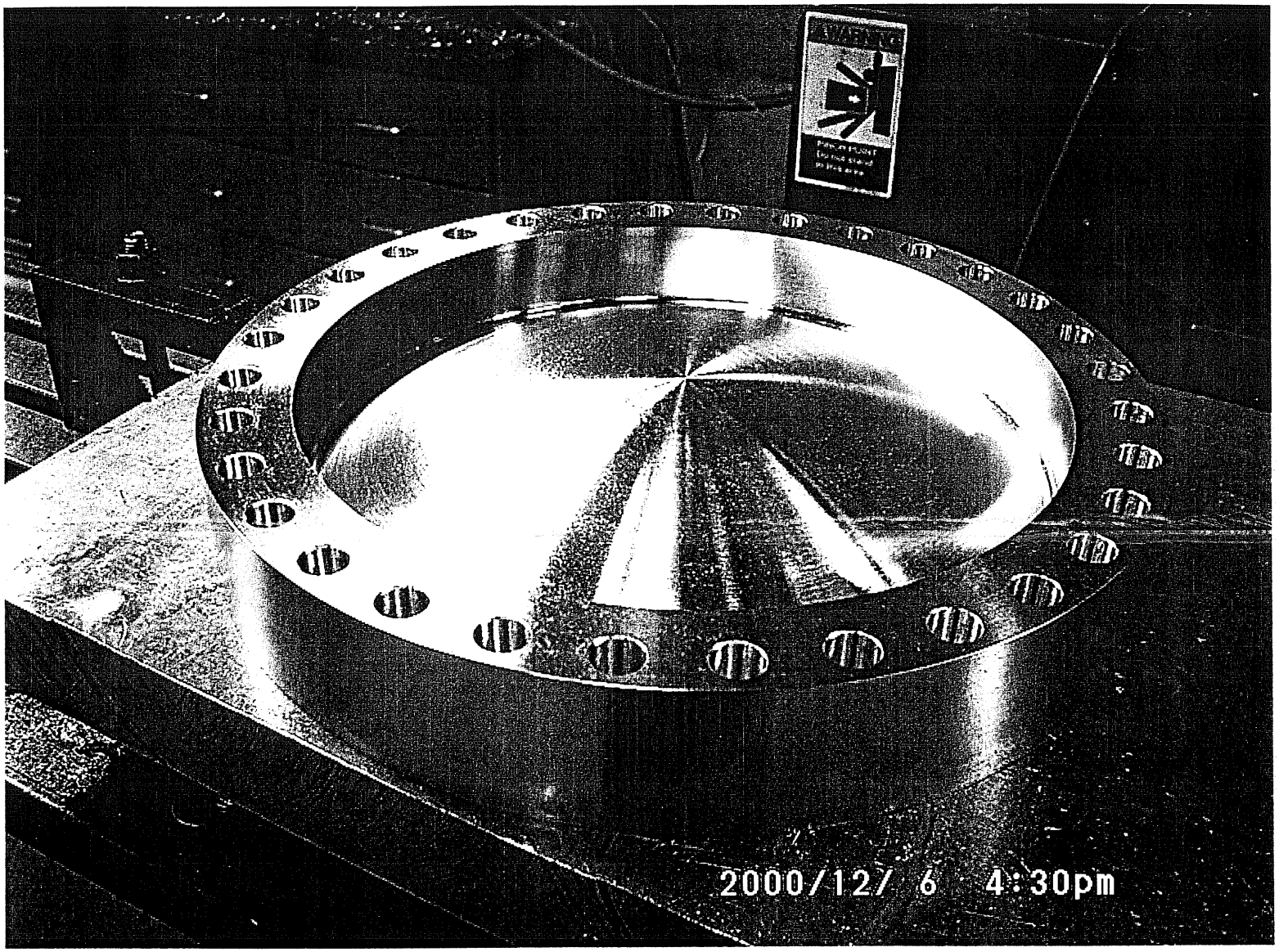
WARNING
2000/12/ 6 4:30pm

Summary of burst pressures and thicknesses

Window number	Temperature	Measured burst pressure (psi)	FEA burst pressure (psi) design thickness=127um	Photogrammetry thickness(u
1	room	43.5	na	na

Window number	Temperature	Measured burst pressure (psi)	FEA burst pressure (psi) design thickness=330um	Photogrammetry thickness(u
2	room	119	117	na
3	room	120	117	na
4	LN	151	156	331.6

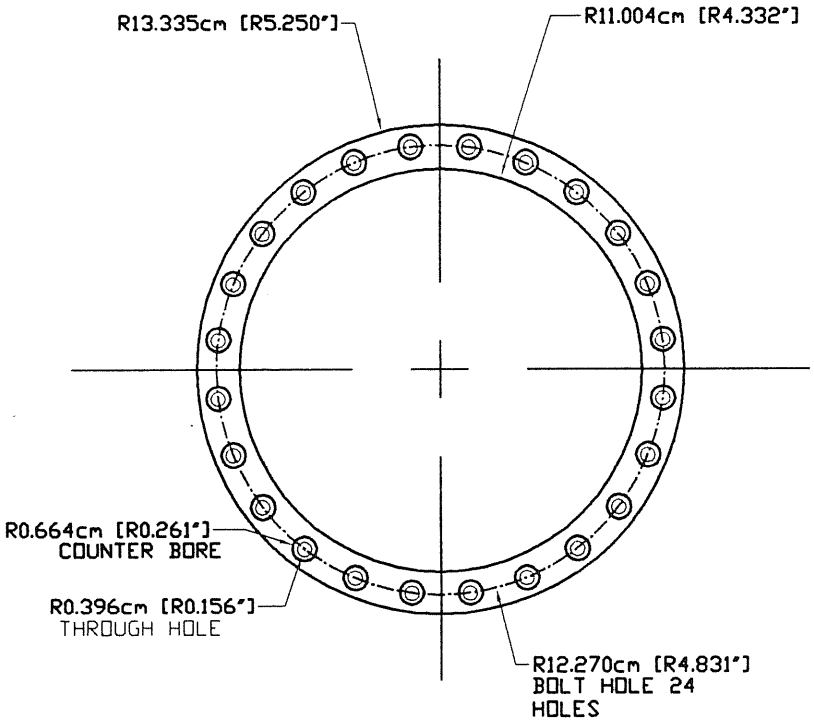

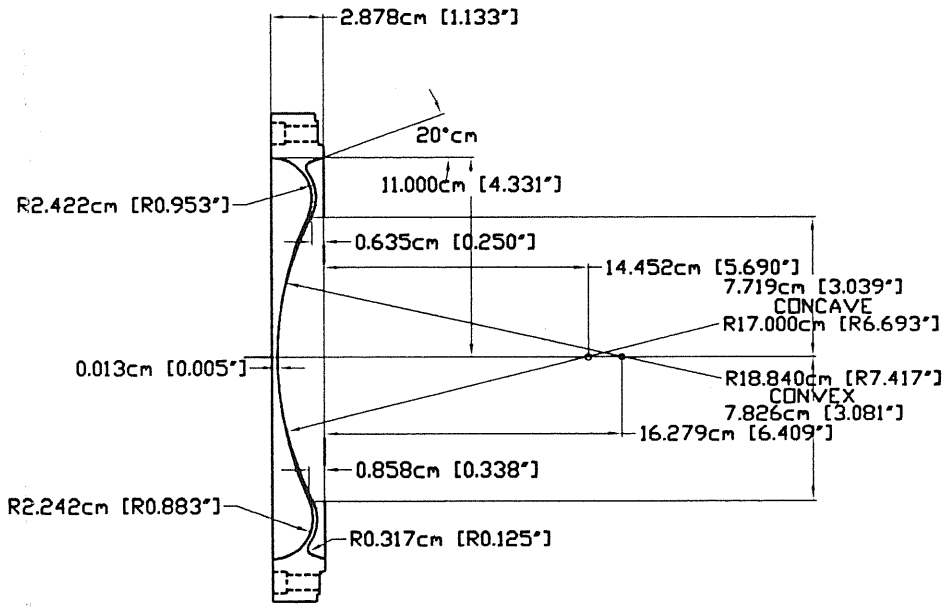

11CM R. BELLOW WINDOW LG MAGNET TEST MANIFOLD

E.BLACK 3/27/2002

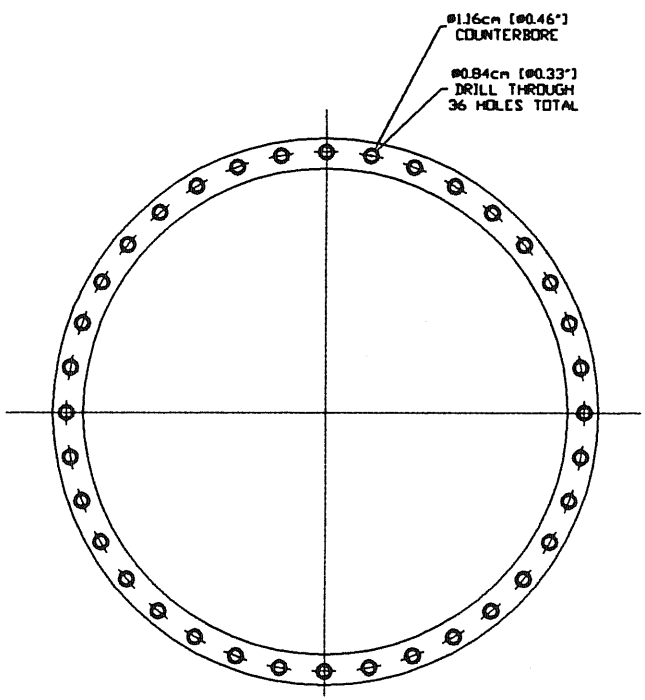

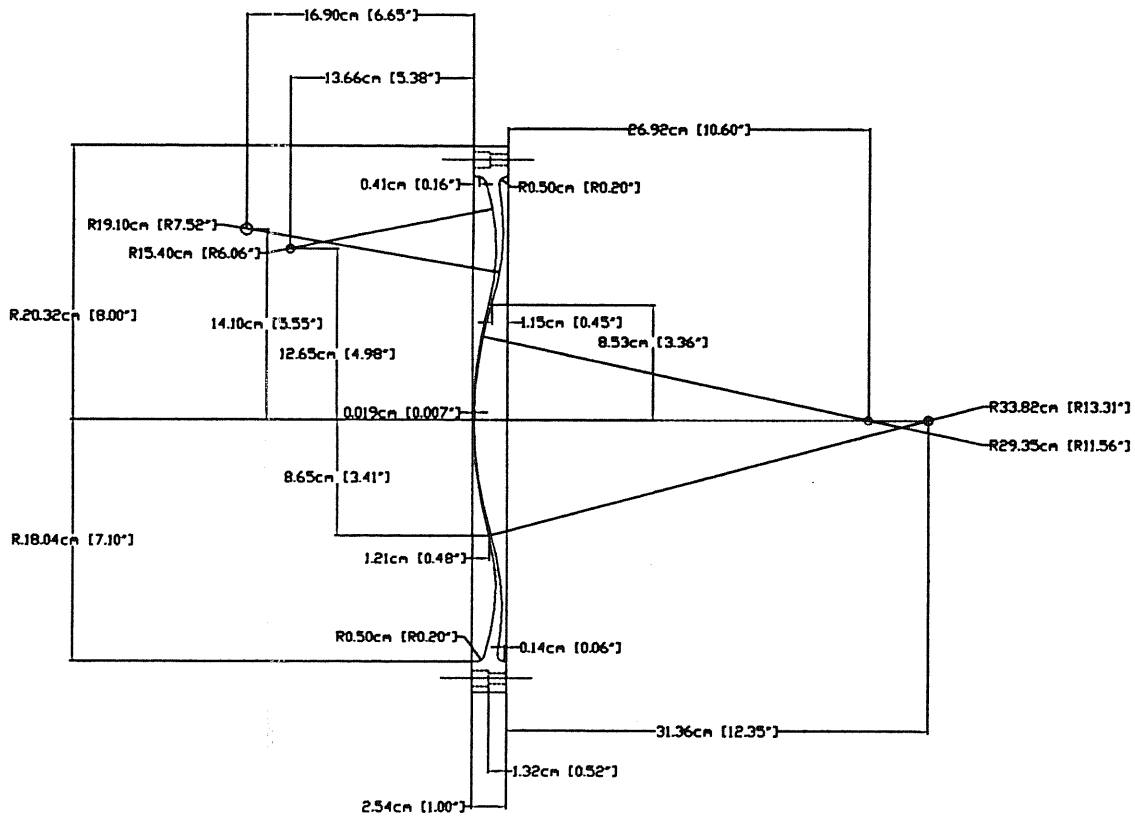

VACUM CONTAINMENT BELLOW WINDOW DETAIL

E. L. Black 2/25/2002

belwindowlh.dwg

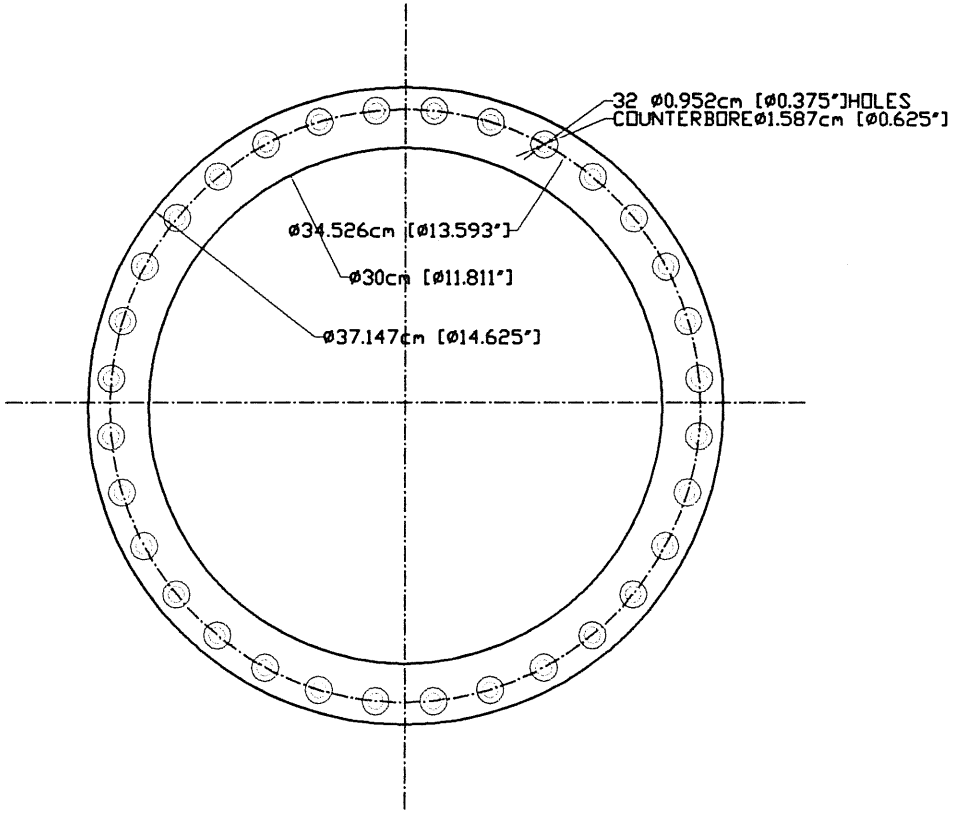

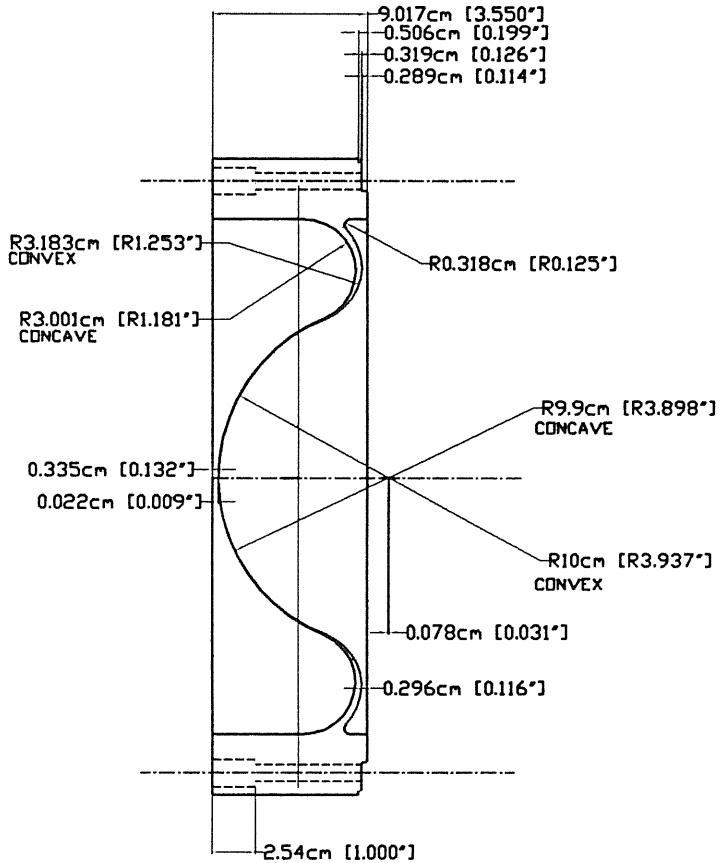

MINIMUM THICKNES ABSORBER WINDOW
PROFILE GEOMETRY

MATERIAL: 6061-T6 ALUMINUM ALLOY

Wing Lau/Edgar Black
04/23/2002

thinWind30cm.dwg

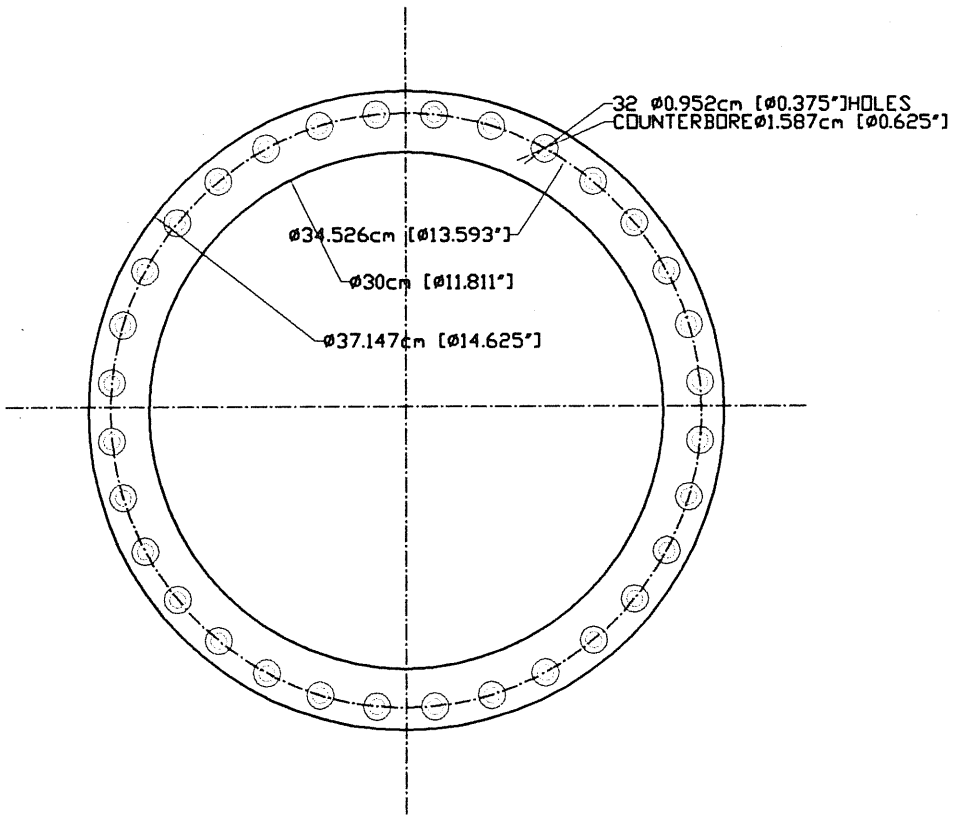

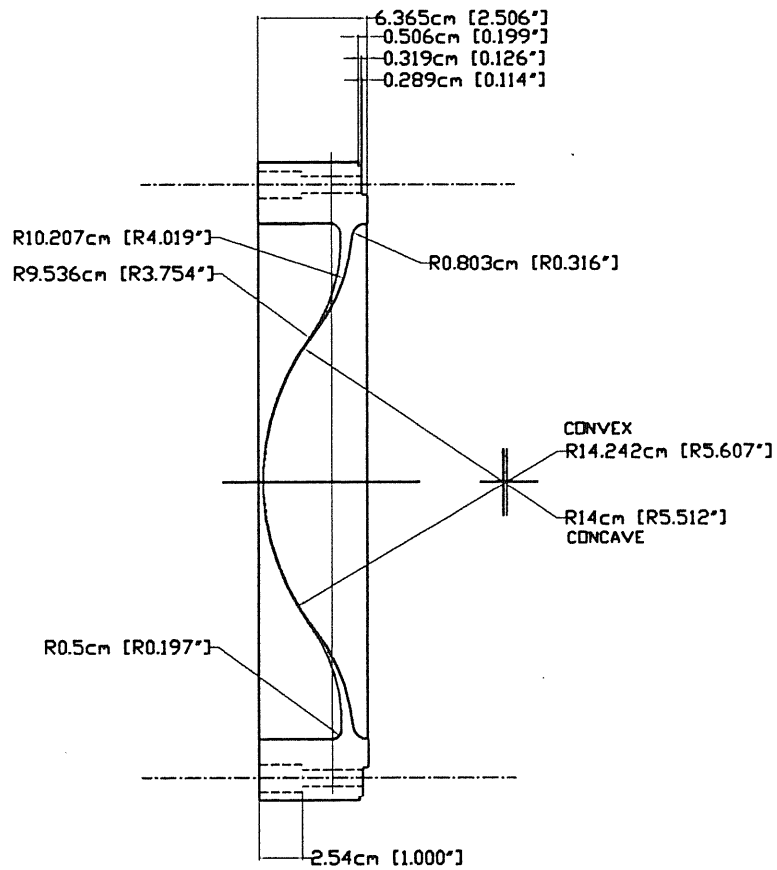

MINIMUM THICKNESS ABSORBER WINDOW
PROFILE GEOMETRY

MATERIAL: 6061-T6 ALUMINUM ALLOY

Wing Lau/Edgar Black
04/23/2002

thinWindII30cm.dwg

A MODERN AIRCRAFT ALUMINUM ALLOY

Aluminum Alloy Name	Composition % by weight	Density g/cc	Yield Strength ksi 300K	Tensile Strength ksi 300K	Tensile Strength ksi 20K	Radiation Length cm
6061-T6	1.0Mg .6Si .3Cu .2Cr	2.70	40	45	68	8.86
2090-T81	2.7Cu 2.2Li .12Zr	2.59	74	82	120	9.18

Alloying Element Name	Z	A	Density	Radiation_Length(cm)
Lithium	3	6.94	0.534	155.
Magnesium	12	24.30	1.74	14.4
Aluminum	13	26.98	2.70	8.89
Silicon	14	28.08	2.33	9.36
Chromium	24	51.99	7.19	2.08
Copper	29	63.55	8.96	1.43
Zirconium	40	91.22	6.53	1.56

2195 Al-Li

McCOOK METALS

McCook Metals L.L.C.
4900 First Avenue
McCook, IL 60525-3294
Phone 1.800.462.9838
Outside U.S. 708.485.90
Fax 1.800.338.9180 or
708.387.8182
www.mccookmetals.con

2195 Low Density / High Strength Aluminum-Lithium Alloy

TECHNICAL DATA

Product Availability[1]

Thickness Range	Up to 2.0 inches	(50 mm)
Widths	Up to 132 inches	(3.4 m)
Lengths	Up to 550 inches	(13.9 m)

[1]Plate sizes are subject to inquiry. Extrusion and Forging billets are also available.

Mechanical Properties[2]

		U.S. Customary Units	Metric Units
Ultimate Strength			
	L	87 ksi	600 MPa
	LT	86 ksi	593 MPa
	ST	85 ksi	586 MPa
Yield Strength			
	L	84 ksi	579 MPa
	LT	81 ksi	558 MPa
	ST	74 ksi	510 MPa
Elongation			
	L	10%	10%
	LT	8%	8%
	ST	4%	4%
Fracture Toughness			
	L-T	24 ksi ˆin	27 MPa ˆ m
	T-L	23 ksi ˆ in	26 MPa ˆ m
	S-L	20 ksi ˆ in	22 MPa ˆ m
Tensile Elastic Modulus			
	L	11 Msi	76 GPa
Density		0.0975 lbs/inch^3	(2.71 g/cm^3)
Stress Corrosion		>45 ksi for 10 days per ASTM G47	

[2]Material available to applicable customer specifications. Data reflects typical 1.5-Inch 2195-T8XX Plate data.

2195 Al-Li

McCook Metals Aircraft/Aerospace Alloys

McCOOK METAI

For applications that require high strength and low-density, specify McCook Metals 2195 Al-Li Plate

McCook Metals L.L.C.
4900 First Avenue
McCook, IL 60525-329
Phone 1.800.462.9838
Outside U.S. 708.485.9
Fax 1.800.338.9180 or
708.387.8182
www.mccookmetals.co

2195 Al-Li

McCook Metals Al-Li 2195 Plate is an Al-Cu-Li-Mg-Ag alloy designed to provide a unique combination of high strength, low-density and weldability for aerospace structures.

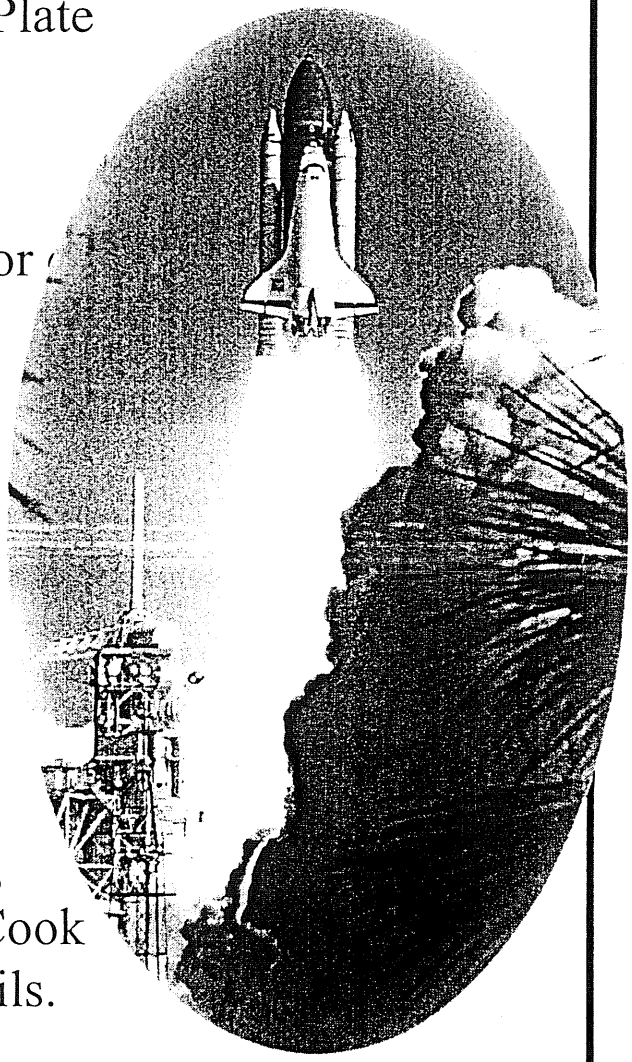

2195 has been successfully used on cryogenic tank applications - Saving over 7000 lbs (3100 kg) on the Space Shuttle External Tank

2195 is available as extrusion billet, forging stock, and thin plate. Ask your McCook Metals representative for details.

For more information on McCook Metals 2195 plate, contact your local McCook Metals Sales Representative, or call toll free
1.800.452.9838 ❖ Outside U.S. 708.485.9000

McCook Metals L.L.C.

We're doing things today, that have never been done before.

WINDOW FABRICATION

One 125 micron central thickness window
has been tested at 44 psi

One 330 micron central thickness window
has been tested to 120 psi

We need a factor of four safety margin

Four more 330 micron central thickness windows
have been fabricated

The key to thin windows is a precision machined
backing plate

Mississippi now has a new 27" swing NC lathe

PLANS

Fabricate smaller windows that will fit in the
available superconducting soleinoid.

Obtain samples of Lithium Aluminum alloys and
test their machining charcteristics