Convection-cooled Absorber

Shigeru Ishimoto KEK

MUCOOL Collaboration Meeting October 22-23, 2001
Perseverance Hall, LBNL

LH_2 Absorber

D=22cm, L=21cm

P~100W

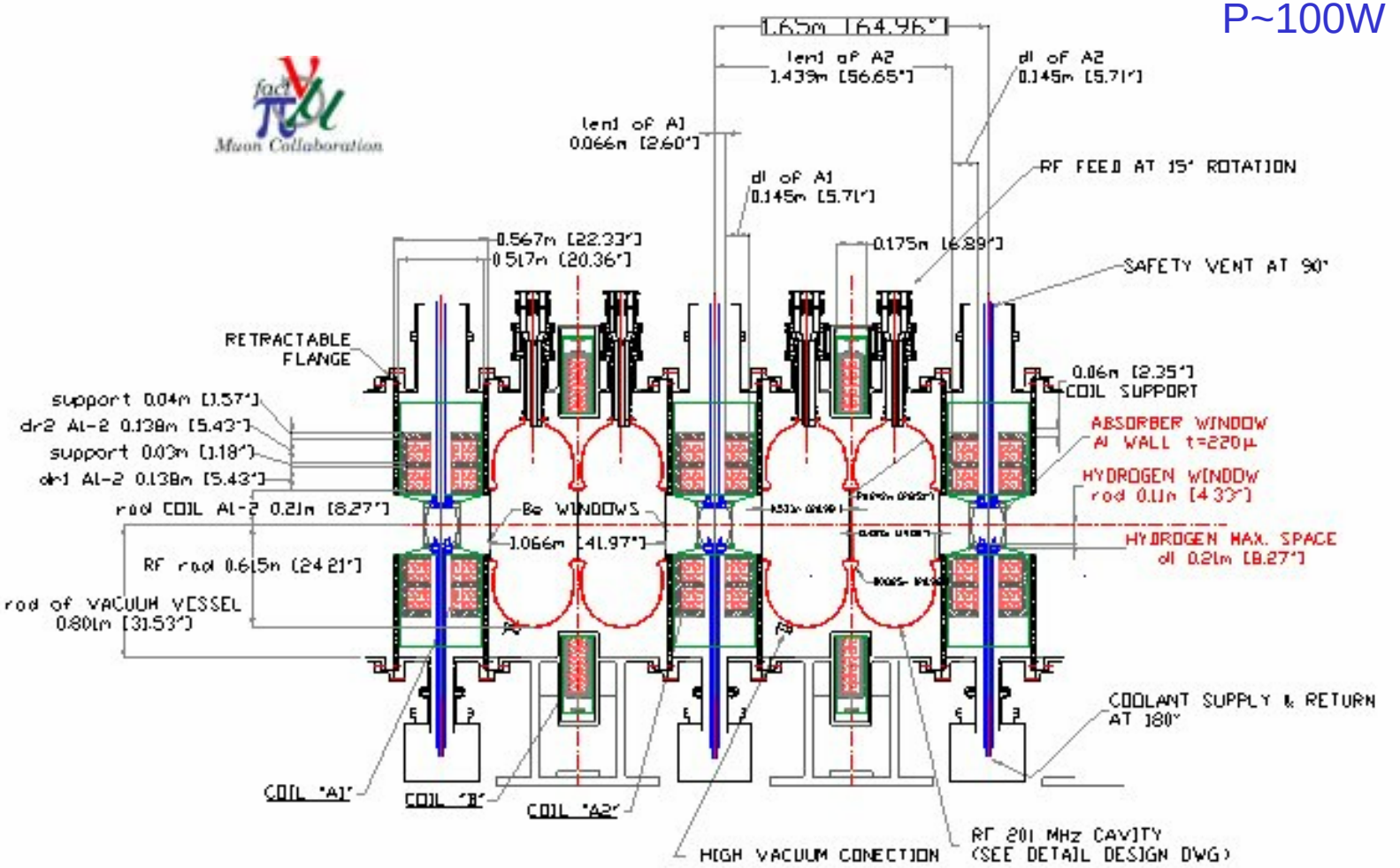

SFOFO 1.65 m LATTICE 2
SCTIONS: 2,1 TO 2,3
STUDY 2

SFOFOLATTICE2rev7a

E.L.Black 01/21/2001
Rev.7 GENERAL
Rev.7a N.Green design 03/06/2001

Present Status of Convection Absorber

MUCOOL LATTICE 2 ; L=21cm, Q_B ~ 100 W

ABSORBER I

(1) We have succeed to operate the absorber with LNe and Q_H= 70 W when LHe consumption was 29.5 l/hr.

(2) High heat load and high LHe flow rate make solid-Ne on the heat exchanger near LHe inlet at bottom.

→ Need to modify the LHe flow direction **ABSORBER II**

→ Additional heater at bottom

→ Additional heater at LHe inlet; 4.2 K → ~ 8 K

→ Need to test by LH_2 at FNAL

ABSORBER I

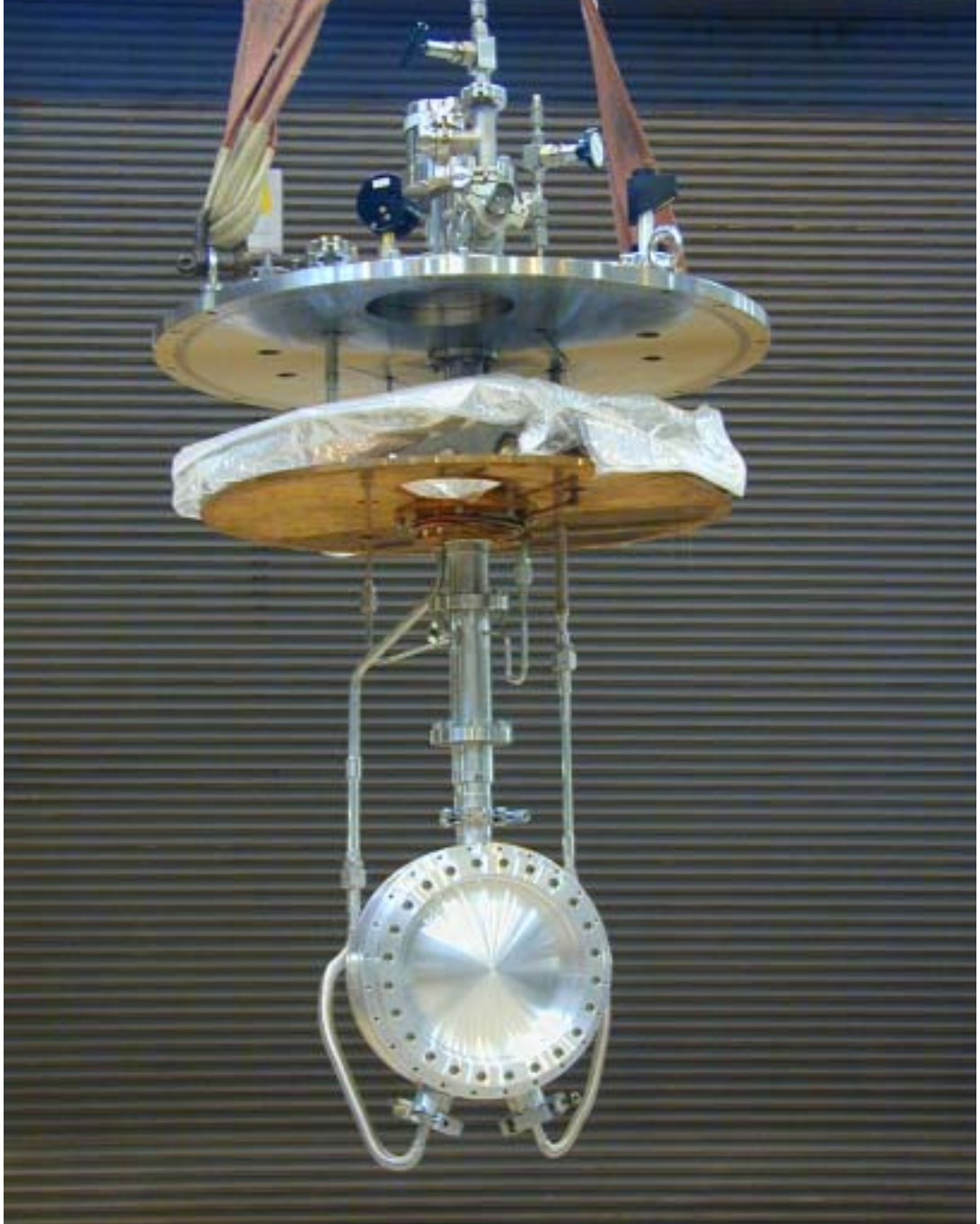

Test Cryostat for LH_2 Absorber

ABSORBER I

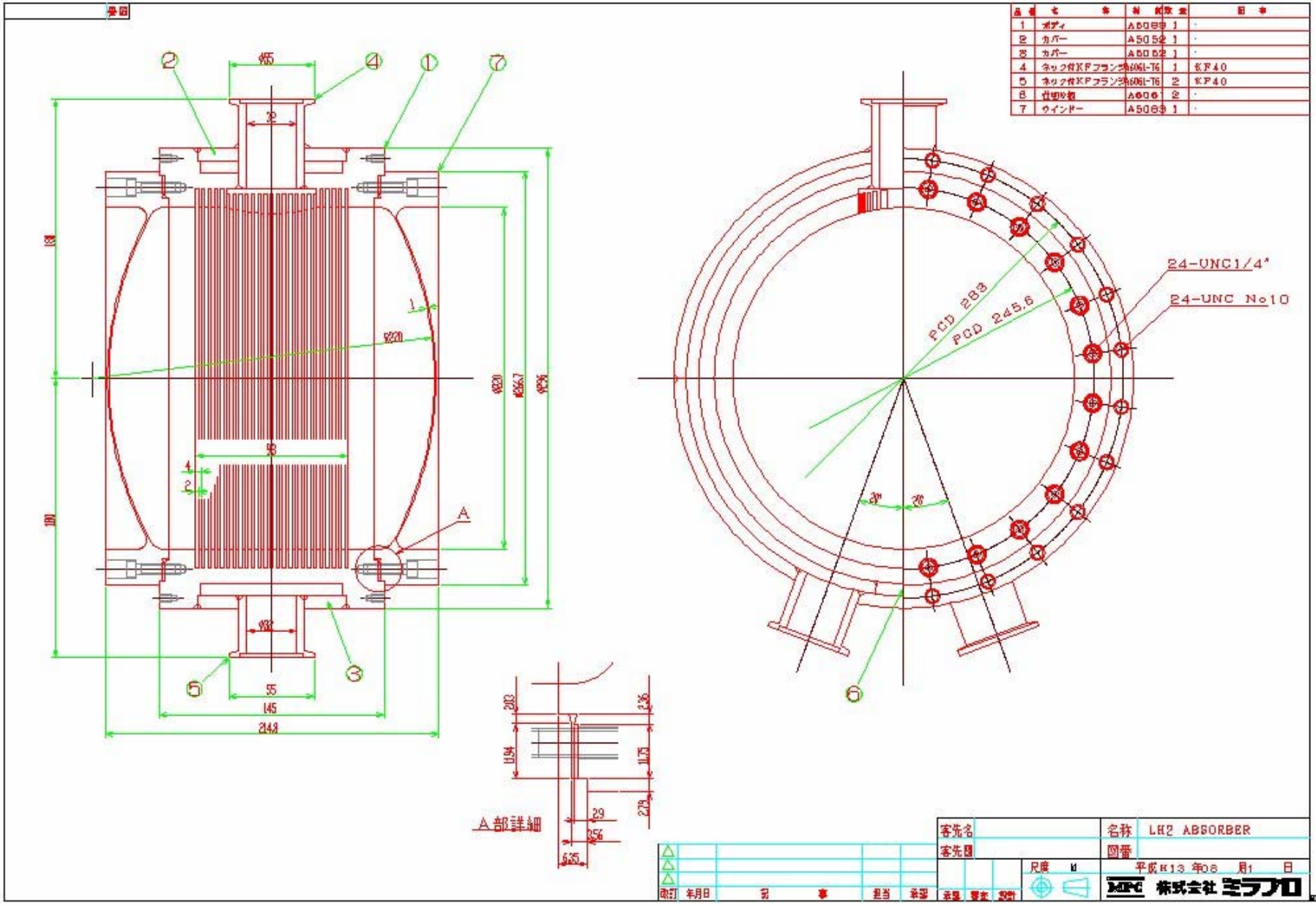
24-UNC1/4"
24-UNC No10
PCD 283
PCD 245.6
A部詳細
LH2 ABSORBER
株式会社 ミラプロ

Dummy Heater

Stainless Steel Wire

d = 0.34 mm

Resistance;

r = 7.5 Ohm/m at R.T.

~ 6 Ohm/m at 27 K

Total;

2 wires of 15 m length parallel

R = 56 Ohm at R.T.

~ 45 Ohm at 27 K

DC-PS (I_{max};2A,V_{max};100V)

P < 180 W

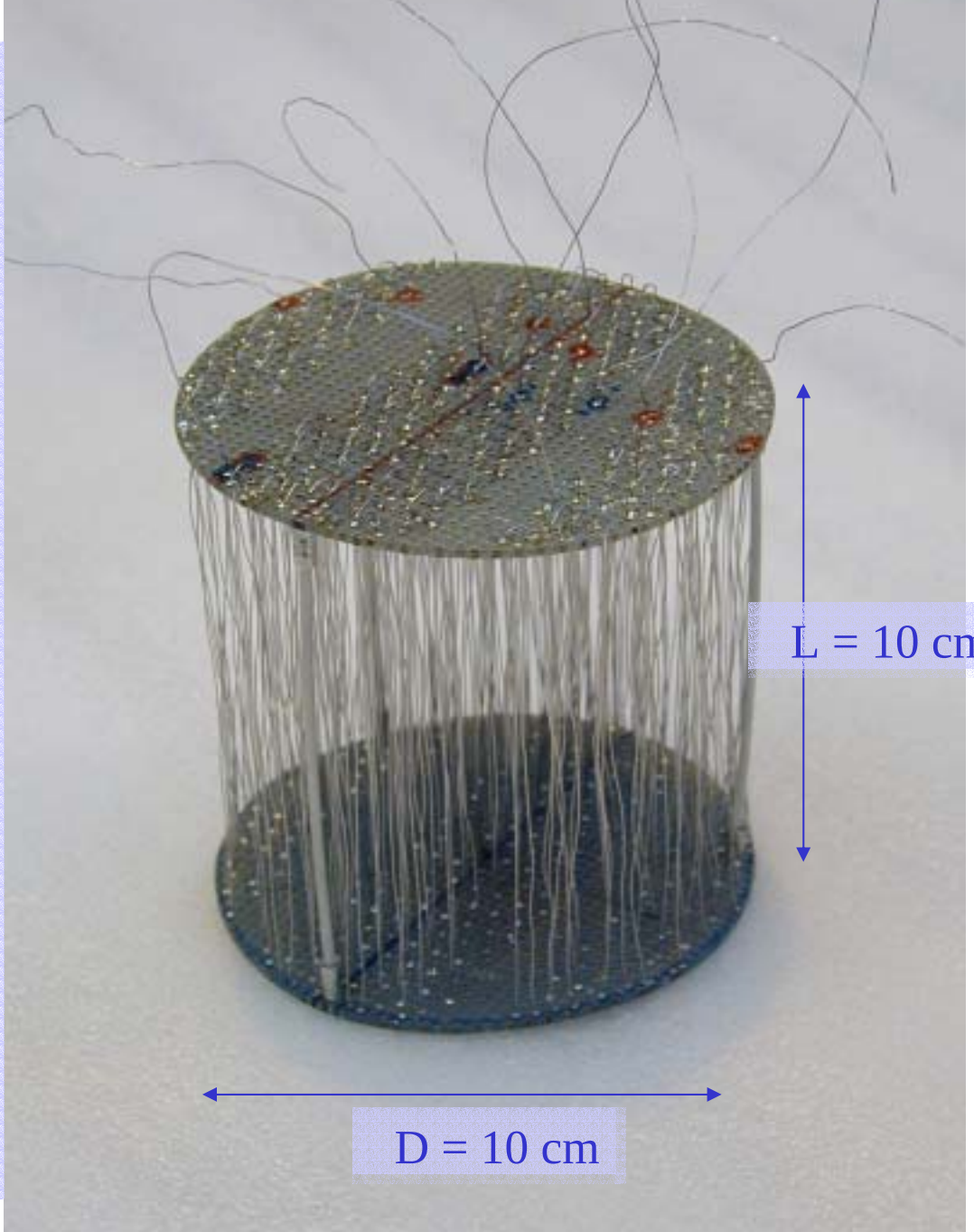

ABSORBER I

with

view ports

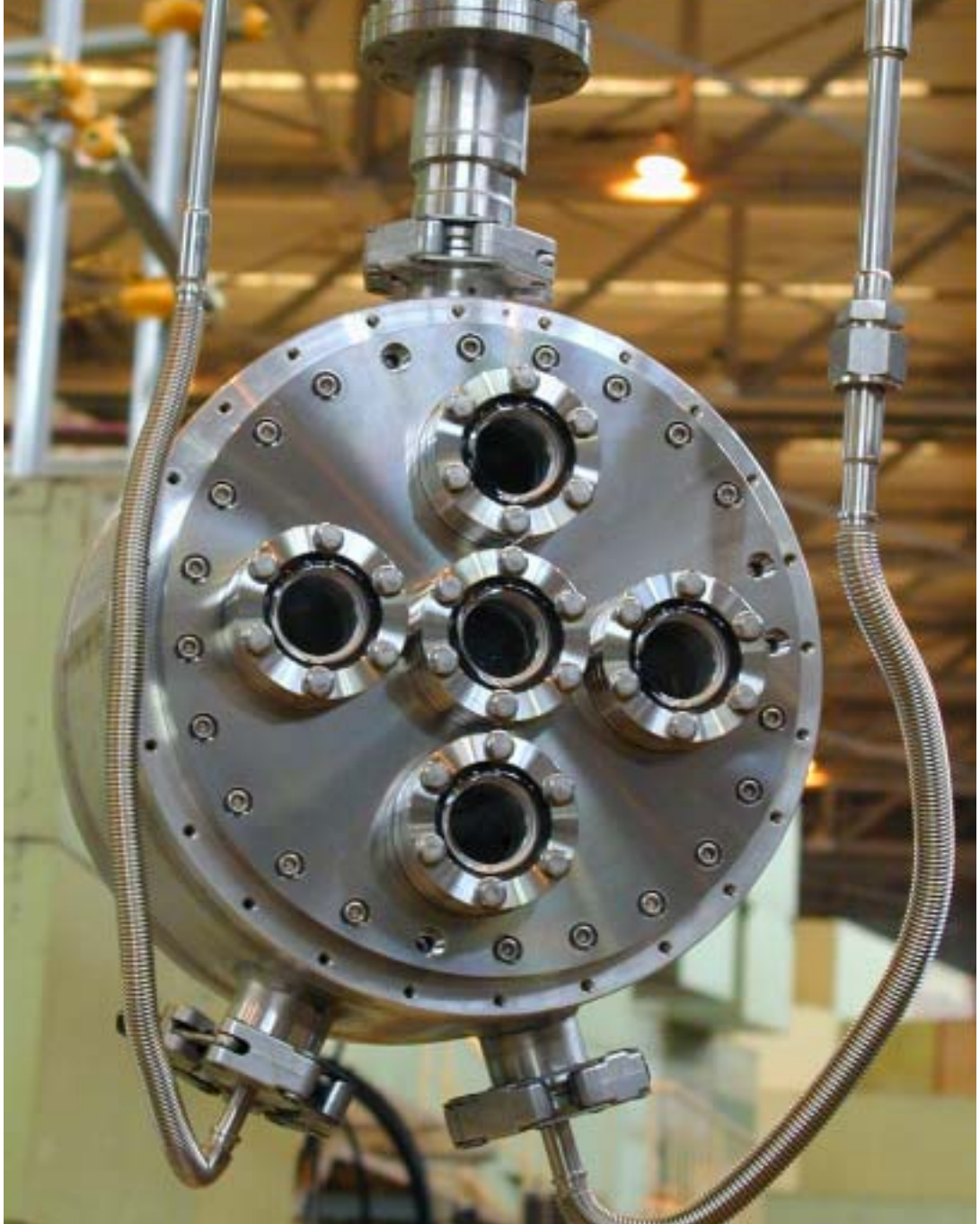

ABSORBER I

LNe bobbles

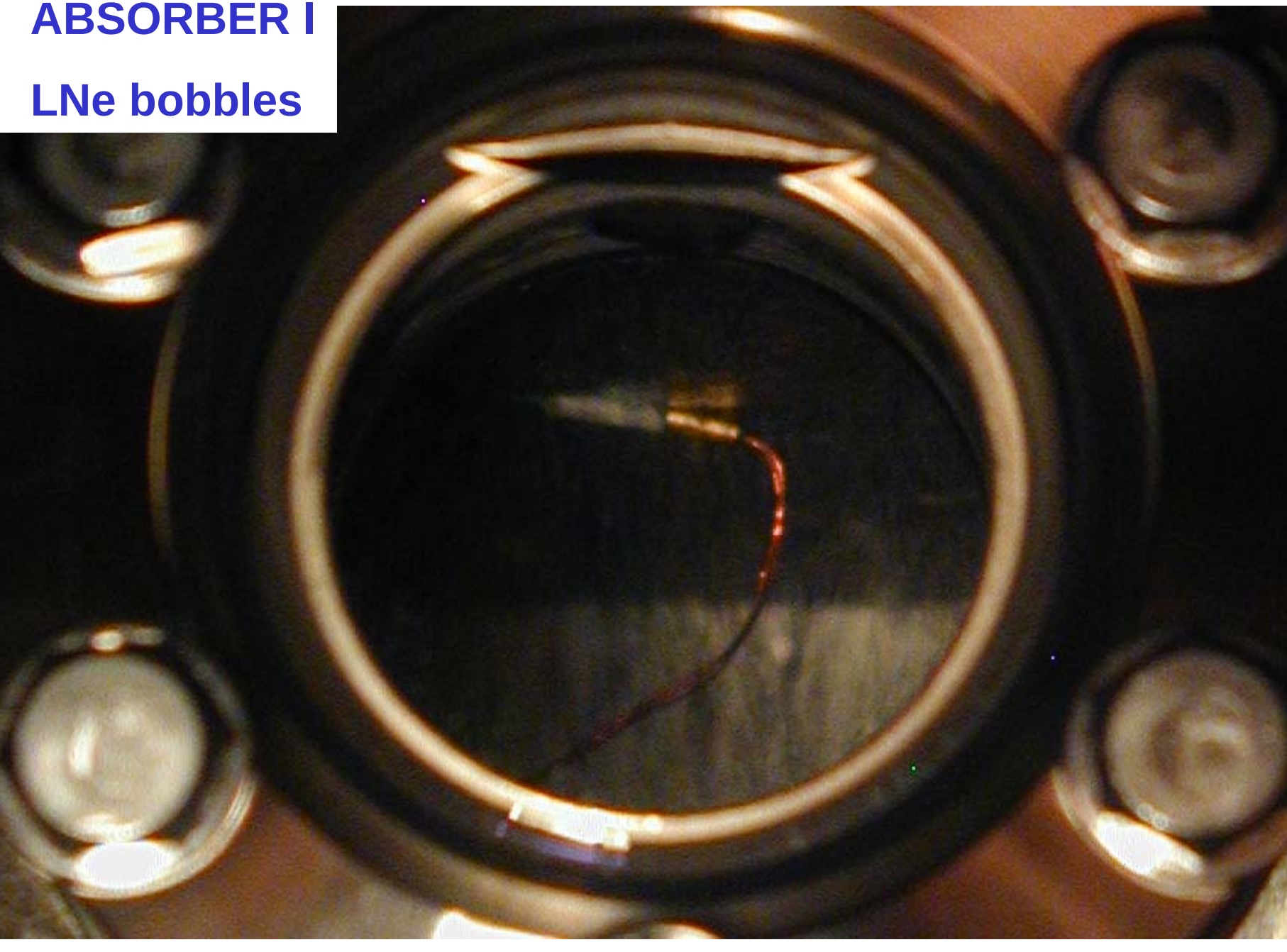

ABSORBER I

Solid Neon

ABSORBER I

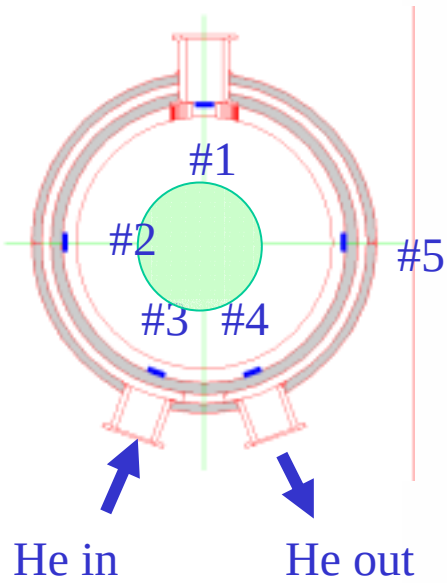
#1
#2
#3
#4
#5
He in
He out

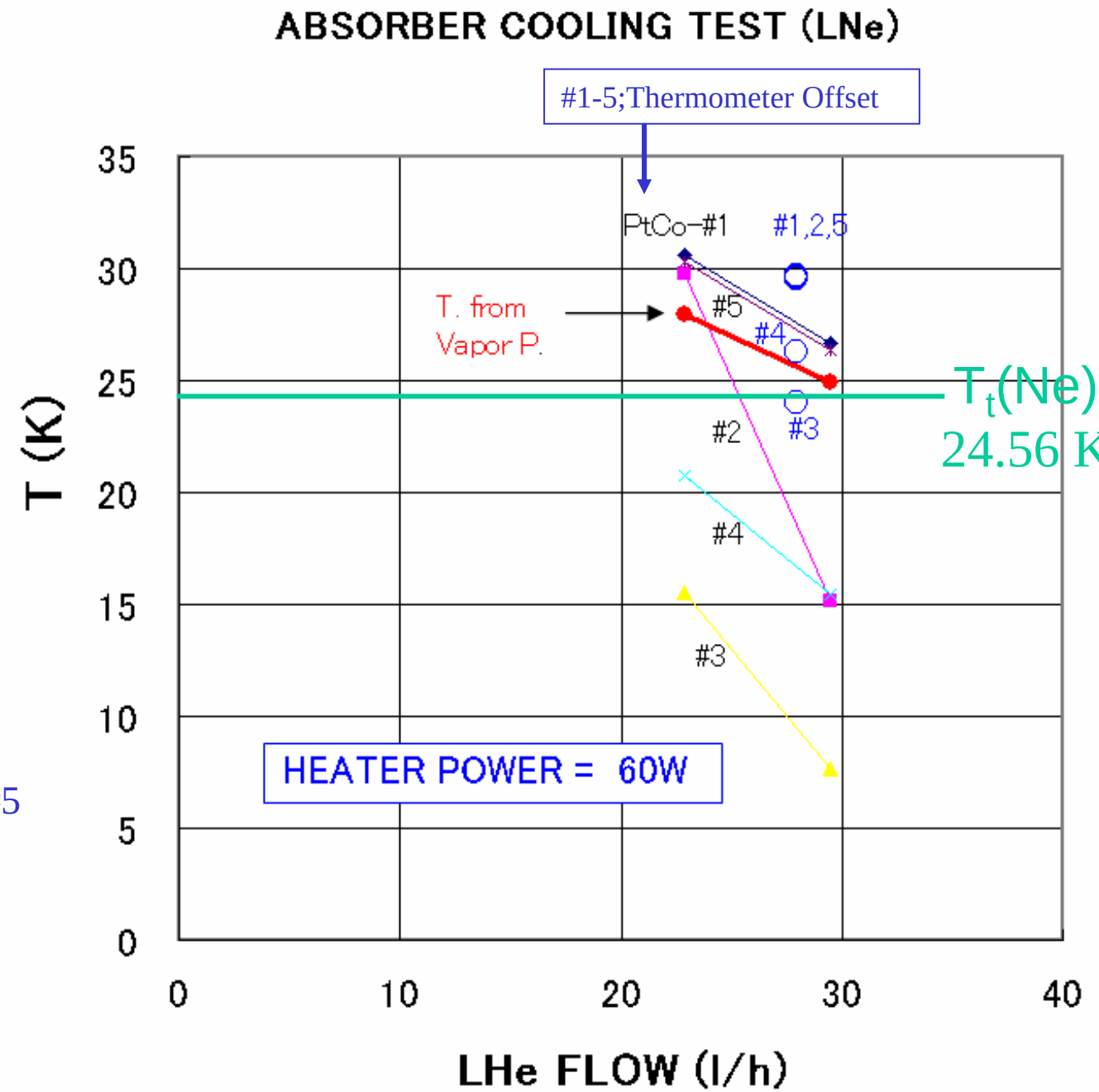
ABSORBER COOLING TEST (LNe)
#1-5;Thermometer Offset
PtCo-#1
#1,2,5
T. from
Vapor P.
#5
#4
#2
#3
#4
#3
T_t(Ne)
24.56 K
HEATER POWER = 60W
T (K)
LHe FLOW (l/h)
0
5
10
15
20
25
30
35
0
10
20
30
40

ABSORBER II

(2-way flow from top)

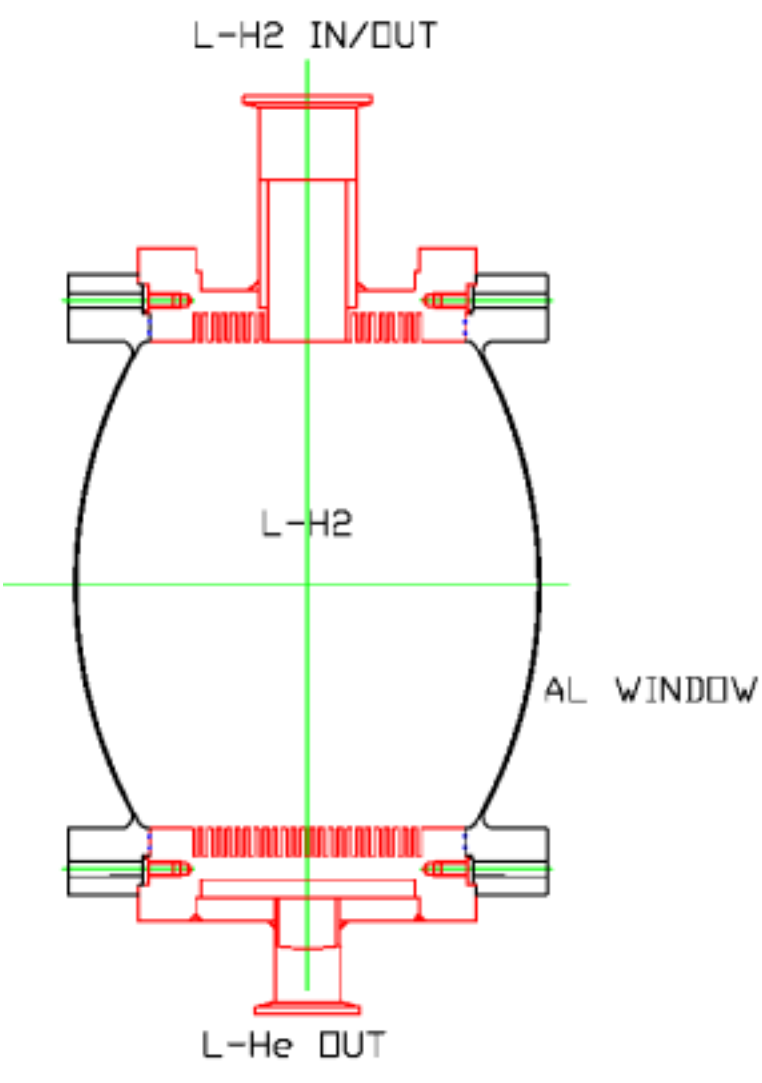

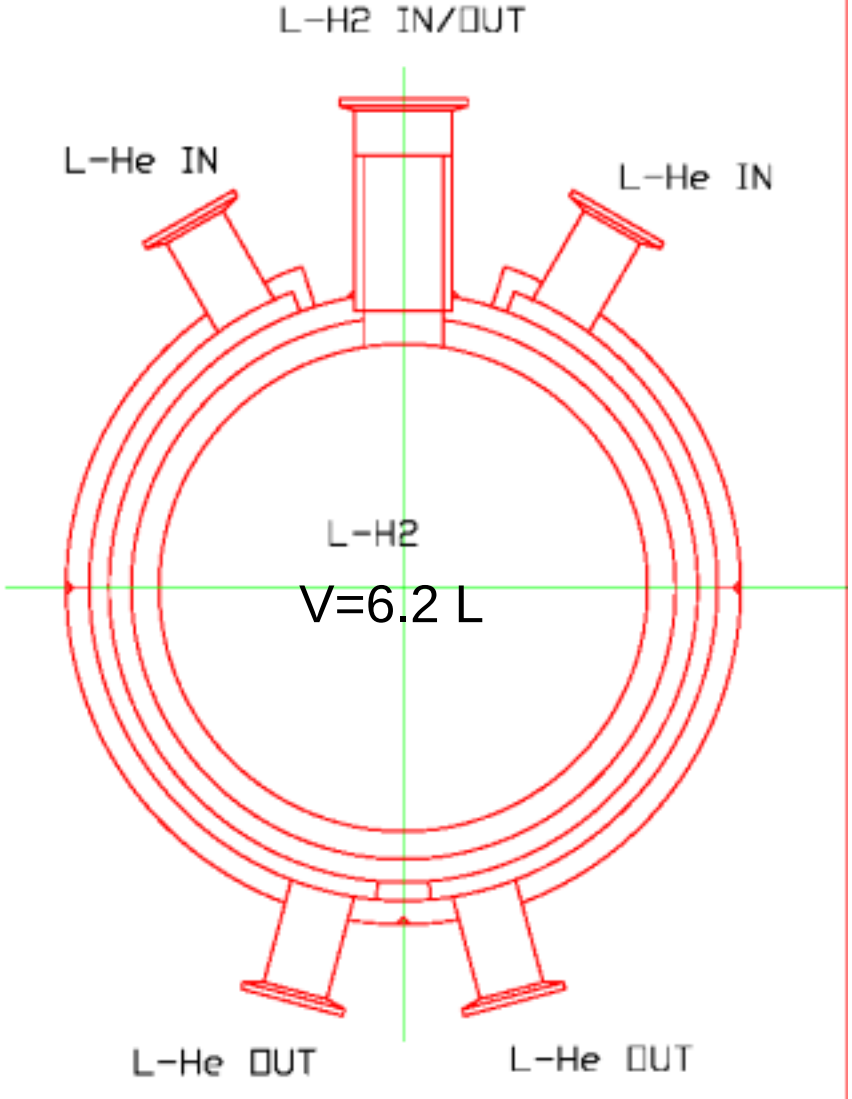

ABSORBER II -- SHEATH HEATER

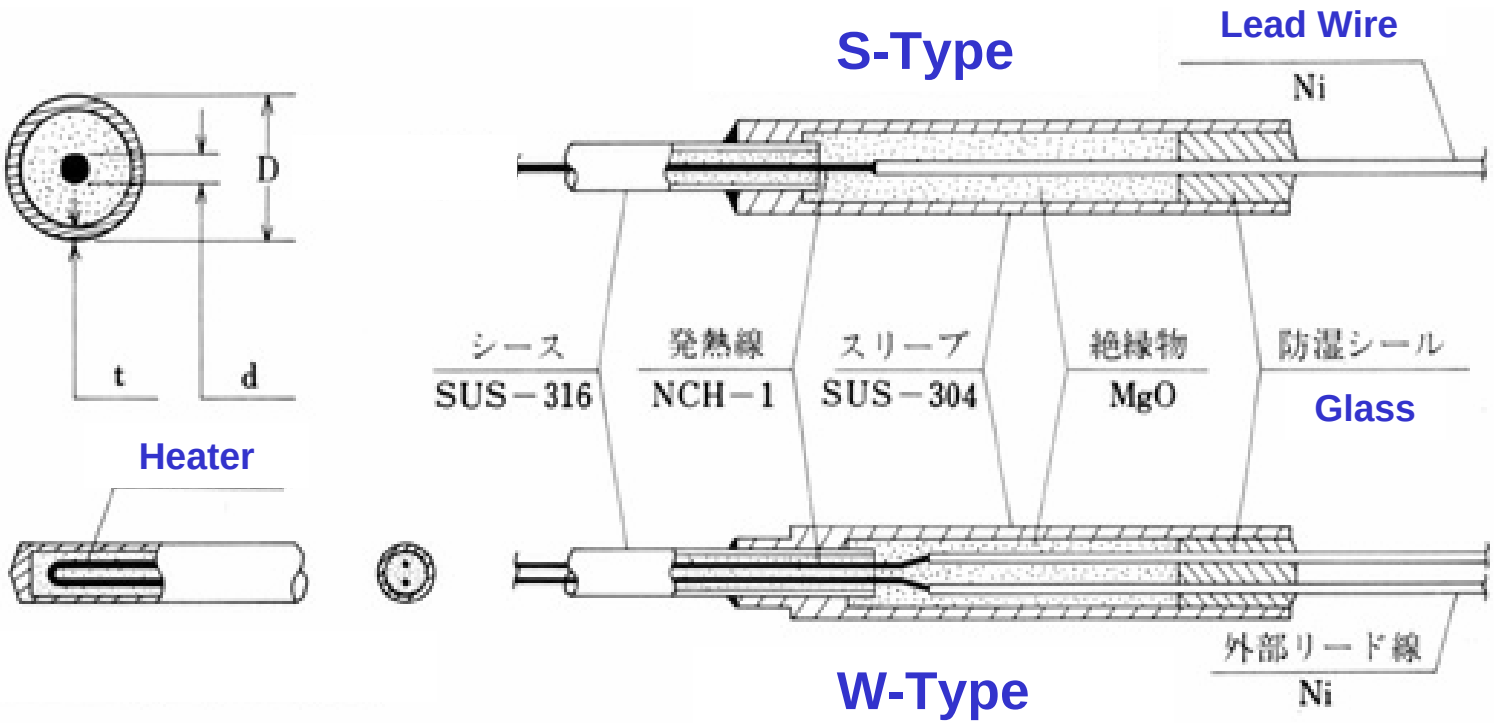

シース外径 D φmm	電　圧 (V)	容　量 (W)	シース長さ L mm	電力密度 W／cm²	抵 抗 値 Ω／m	耐電圧 (V)	d	規格型式
1.6	100	100	1050	1.89	90	500	6.4	WA－1
		150	1100	2.71	60	〃	〃	WA－2
		200	1700	2.34	29	〃	〃	WA－3
		250	1350	3.68	29	〃	〃	WA－4
	200	200	1960	2.03	100	500	6.4	WA－5
		300	2180	2.73	60	〃	〃	WA－6
		400	2400	3.33	42	〃	〃	WA－7
		500	2700	3.69	29	〃	〃	WA－8
		100	900	1.47	110	600	8.0	WA－9

ABSORBER II

OCT-15, 2002

ABSORBER II

OCT-15, 2002

ABSORBER II

OCT-15, 2002

ABSORBER II

OCT-15, 2002

ABSORBER II

OCT-15, 2002

ABSORBER II TEST WINDOWS

OCT-15, 2002

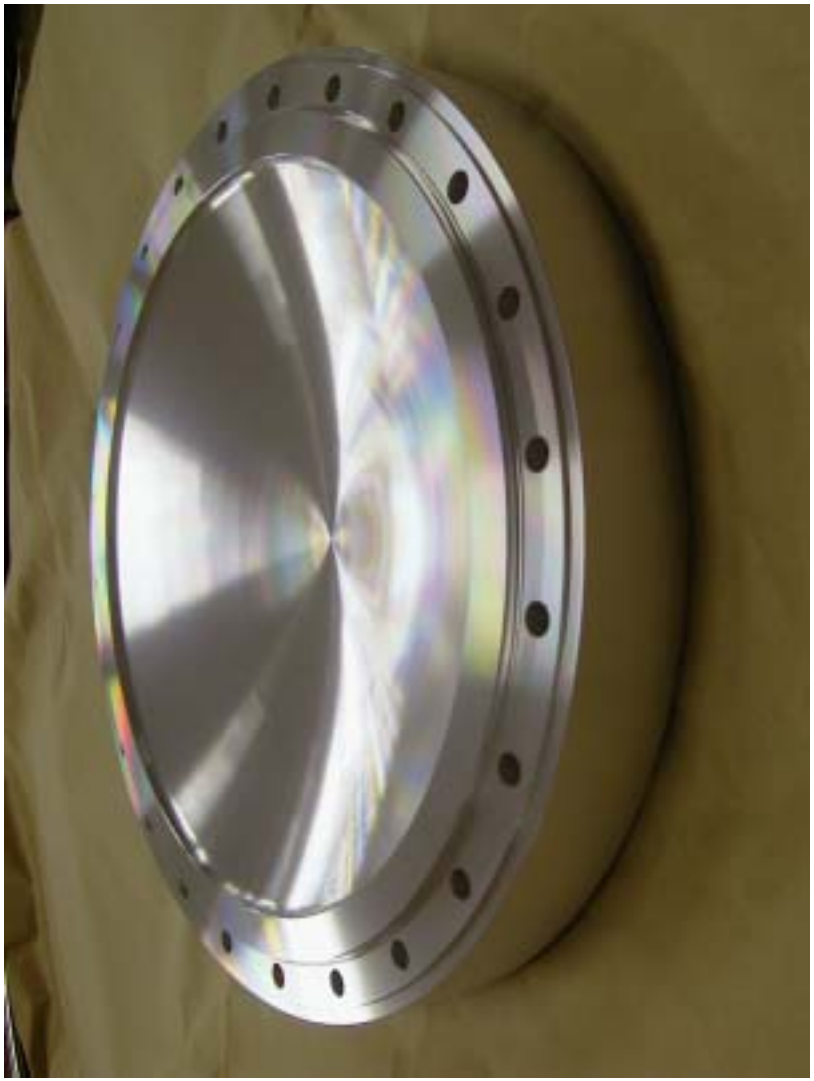

ABSORBER II

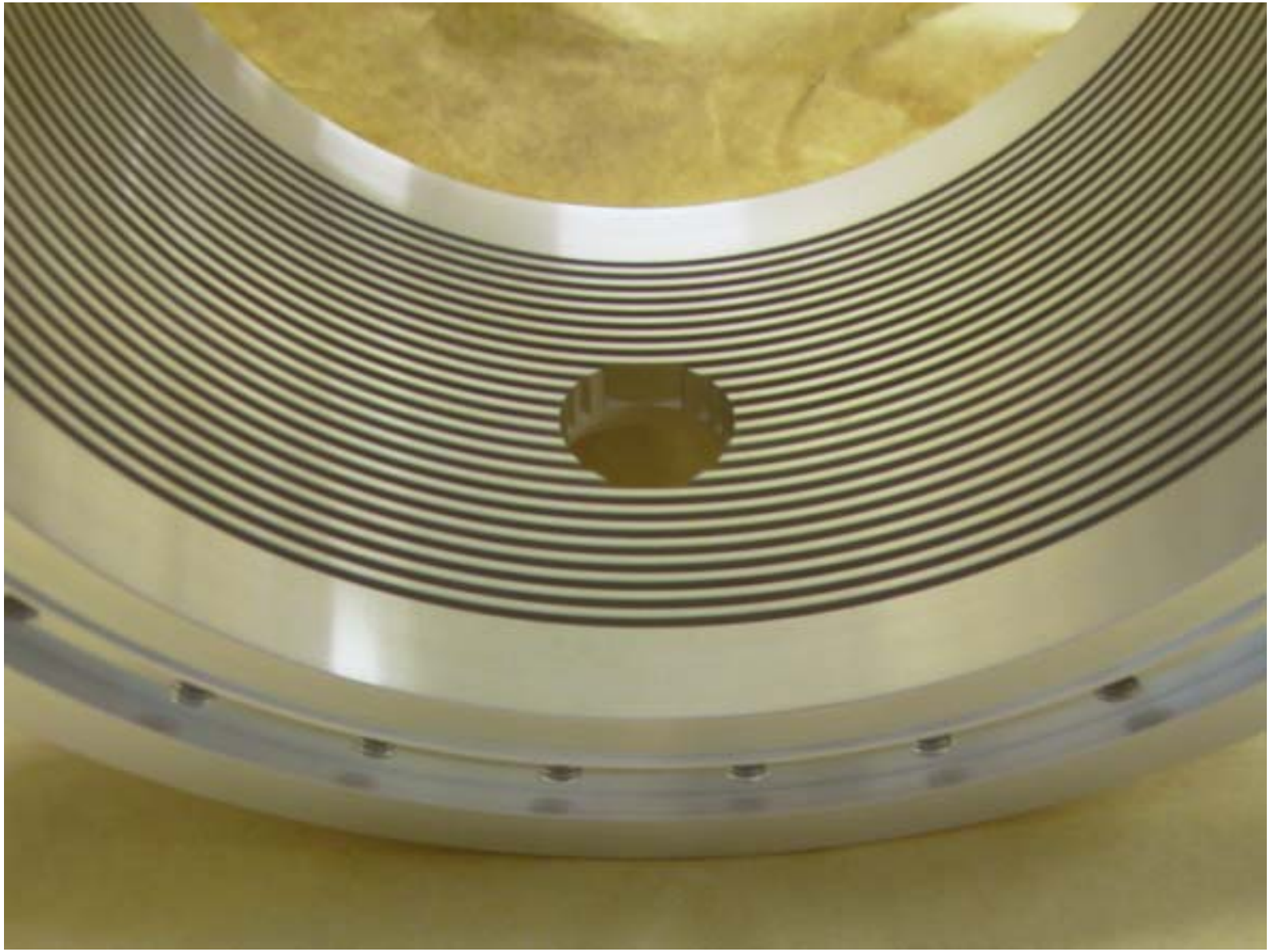

TEST CRYOSTAT

SAFTY VOLUME

V_{H2} = 6.2 L

V_{vac} = 386 L

V_{H2} / V_{vac} = 62.3

> 52

(FNAL required)

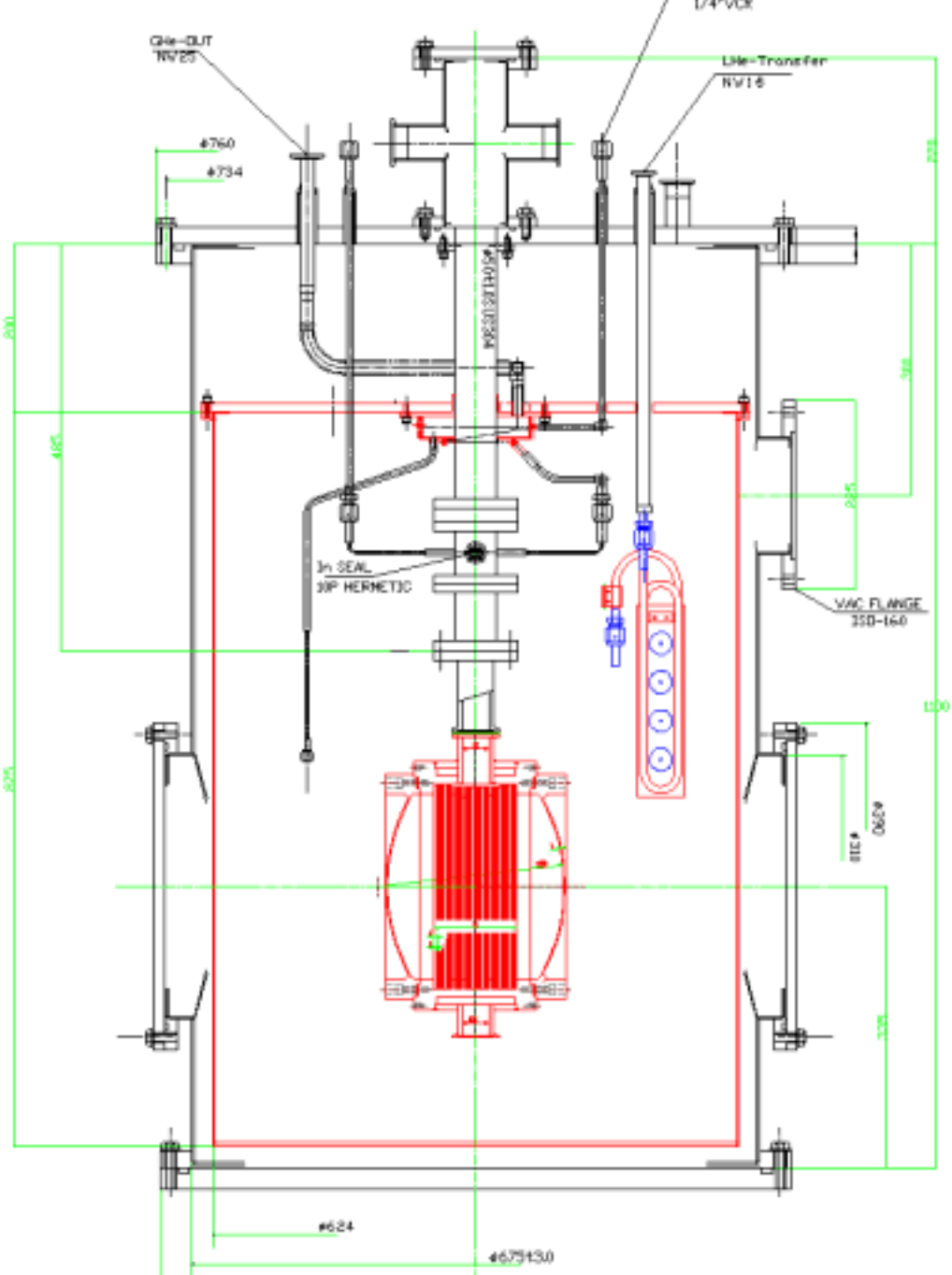

LHe HEATER for HIGH TEMP. TEST

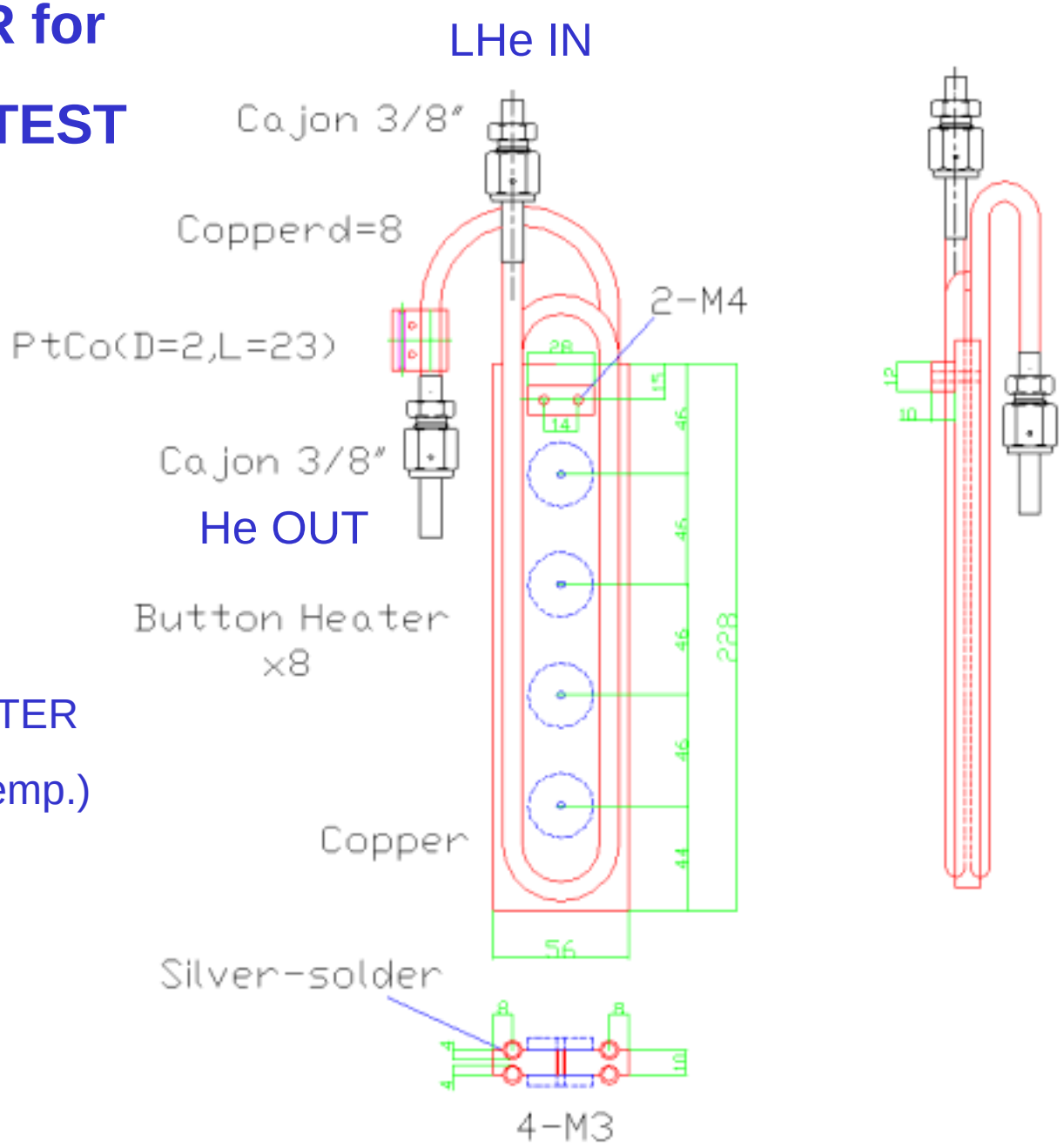

BUTTON HEATER

20 W (Room Temp.)

x 8

LHe HEATER

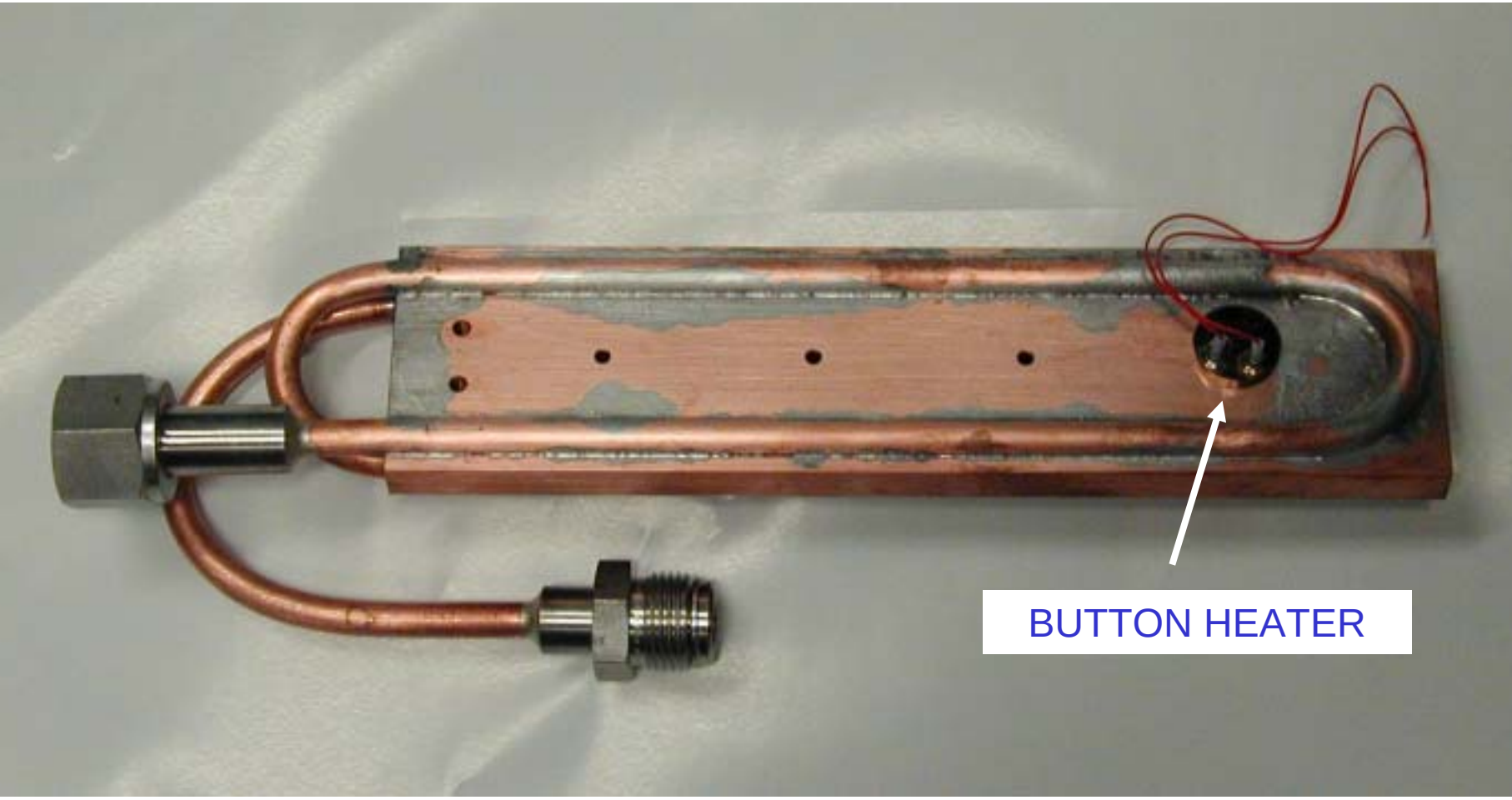

MUCOOL/MICE TIME LINE

2002-Oct-22

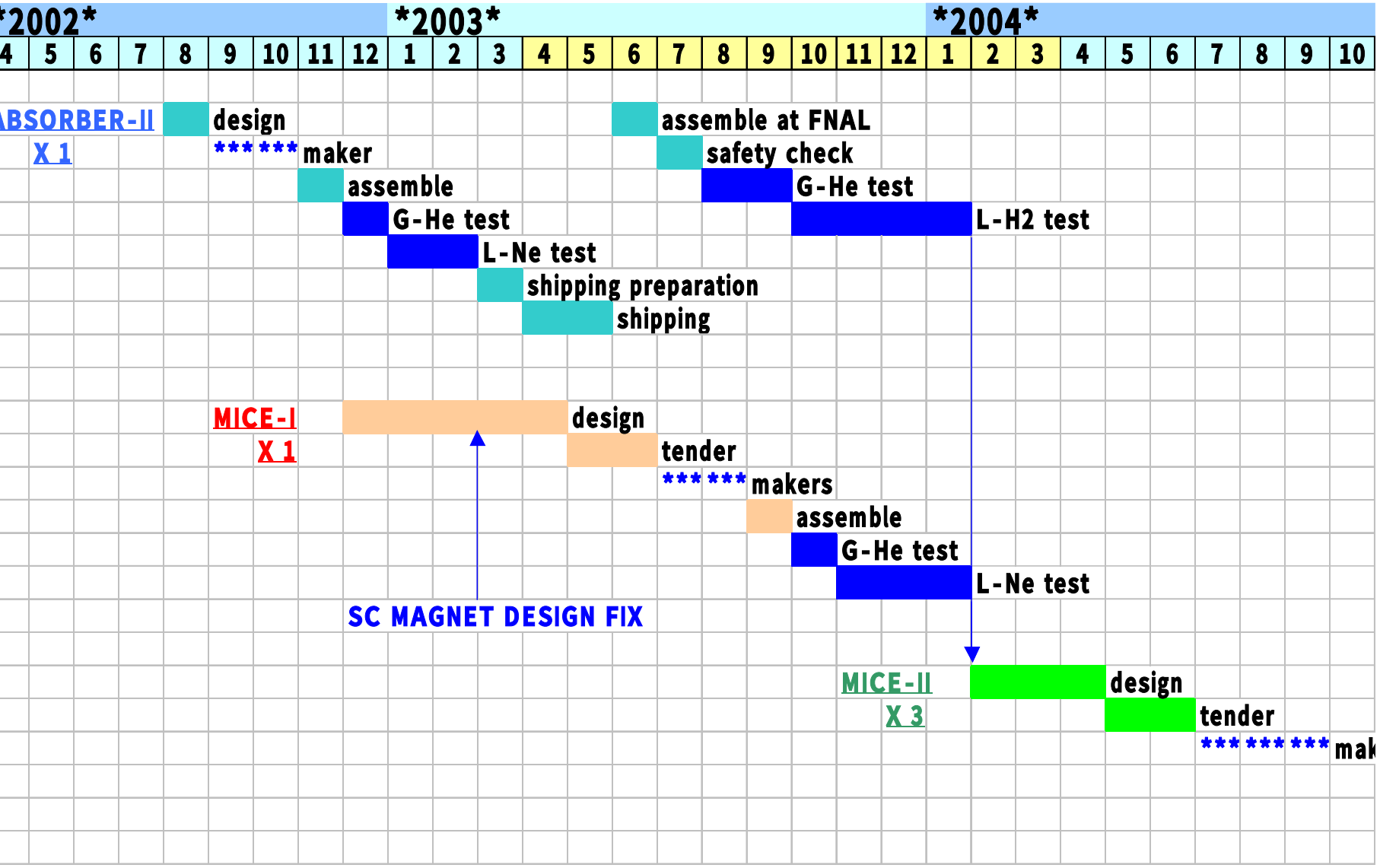

CONCLUSION

(1) ABSORBER II (2-way flow) ; will come soon (~ Nov-1)

with new dummy heater and bottom heater.

(2) We will test ABSORBER II using LNe at KEK.

(3) LHe heater is ready to set.

(4) The shipping date from KEK to FNAL is April or May ’03.

- ABSORBER II, Cryostat, Pump, T.T., DC-PS, …

(5) Safety problems at FNAL

- Window thickness = 1mm → P_{max} > 5 bar.
- Volume ratio of LH2/Vac is 62 > 52.
- Sheath heaters will be used, it was bare S-S wire.