MICE DAQ, Controls and Monitoring Update

NFMCC Friday Meeting

March 10, 2006

A. Bross

DDAQ vs CM

- **Why separate Particle Detector DAQ and Control Sensor DAQ ?**

Detector DAQ

Synchronised with the beam

Very fast reaction time (~μs)

High transfer rate (~50 MB/s)

Read and Store,
no time for on-line processing

Limited User Interface
Run Control only

(Slow) Control and Monitoring

Continuous and permanent

Very reliable (Safety issue)
No software

Deal with a lot of ≠ hardware

Read and Check
Calibration, manage alarms at ≠ levels, soft interlocks, take actions, log history, etc.

Extended UI
Set many parameters, manage complicate initialisation procedures, etc.

MICE DAQ Workshops

- The first MICE DAQ Workshop was held at Daresbury Lab in September of 05
  - Focus was to give an overview of requirements of the experiment and discuss possible hardware and software implementations.
  - Included Front-end, monitoring and controls
- The second DAQ Workshop was held last month at Fermilab
  - Focus was the front-end electronics for the experiment

Conclusions Coming out of Daresbury

- Made Decisions!:
  - EPICS for controls and monitoring
    - Experimental Physics and Industrial Control System
  - Linux
  - VME/PC
    - Ethernet backbone
  - Event Bus (maybe)
- The Start of a Specifications document
  - Has had one iteration

Conclusions Coming Out of Fermilab WS

- Front-end electronics needs to be specified as soon as possible
  - There are a number of options for the ADC needs for MICE, but convergence on a solution will not happen until after the TB at Frascati
    - This is critical
- Chose the ALICE online system
  - Needs to be negotiated with the ALICE collaboration
- Unfortunately, no work on controls and monitoring was done between First and Second DAQ workshops
  - Or at this workshop

Action Items

- Specify/evaluate as much of the hardware as possible
  - Front-end electronics needs to be fully specified since it can effect many aspects of the DAQ
  - Crate specs
    - PCs
    - Various interface cards
- Assemble Test System
  - Core system
    - ALICE-like TB system
  - VME backbone
  - Trigger architecture
  - Front-end electronics
    - Multiple option implemented
  - EPICS interface
    - Need experts to be involved

Overall System Architecture

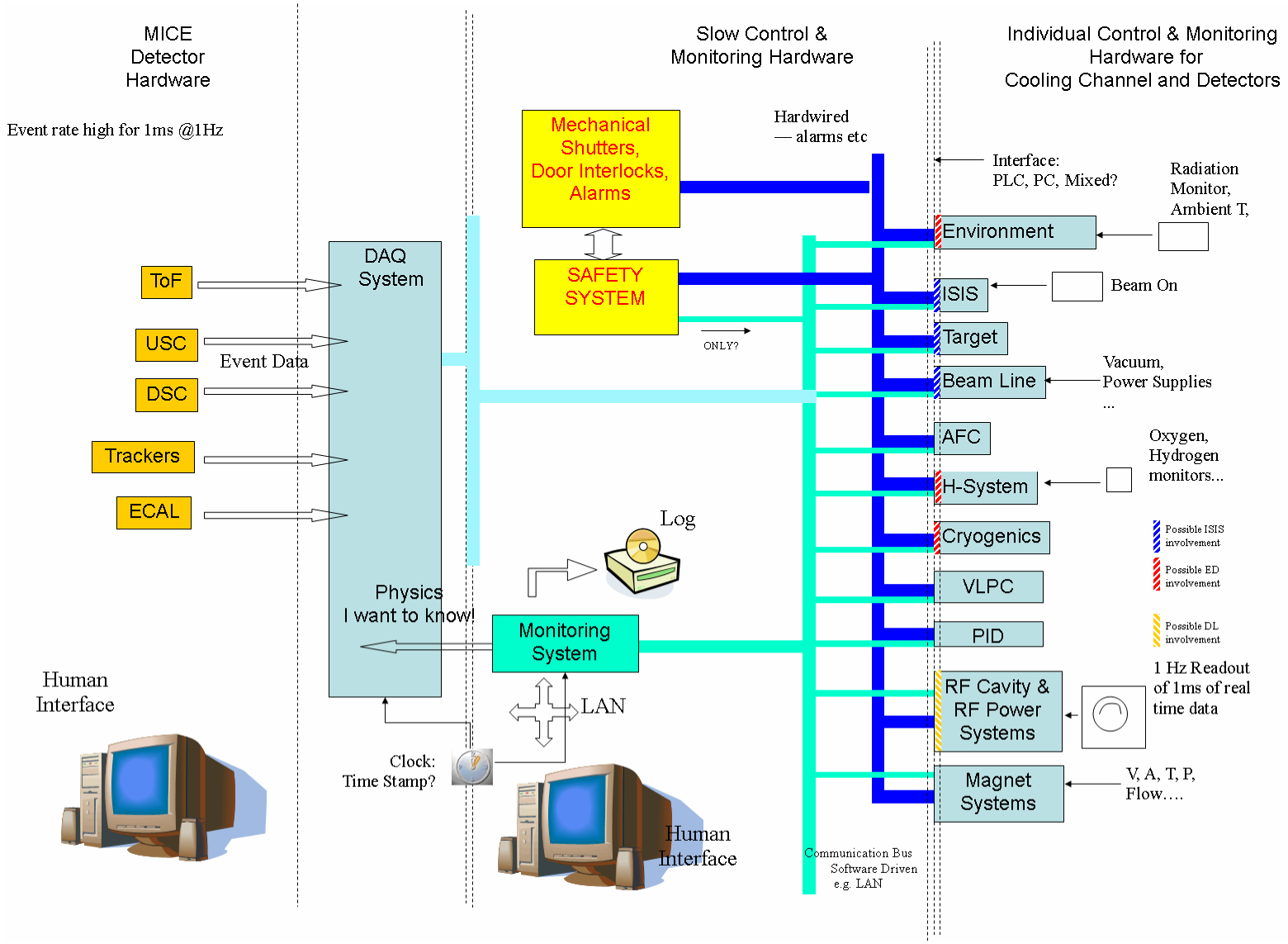

DDAQ Hardware Architecture

Jean-Sebastien Graulich, Geneva

- General Architecture
- Tracker Baseline
- TOF Baseline & Options
- EmCal Baseline & Options
- Trigger Baseline
- Summary

DAQ Architecture

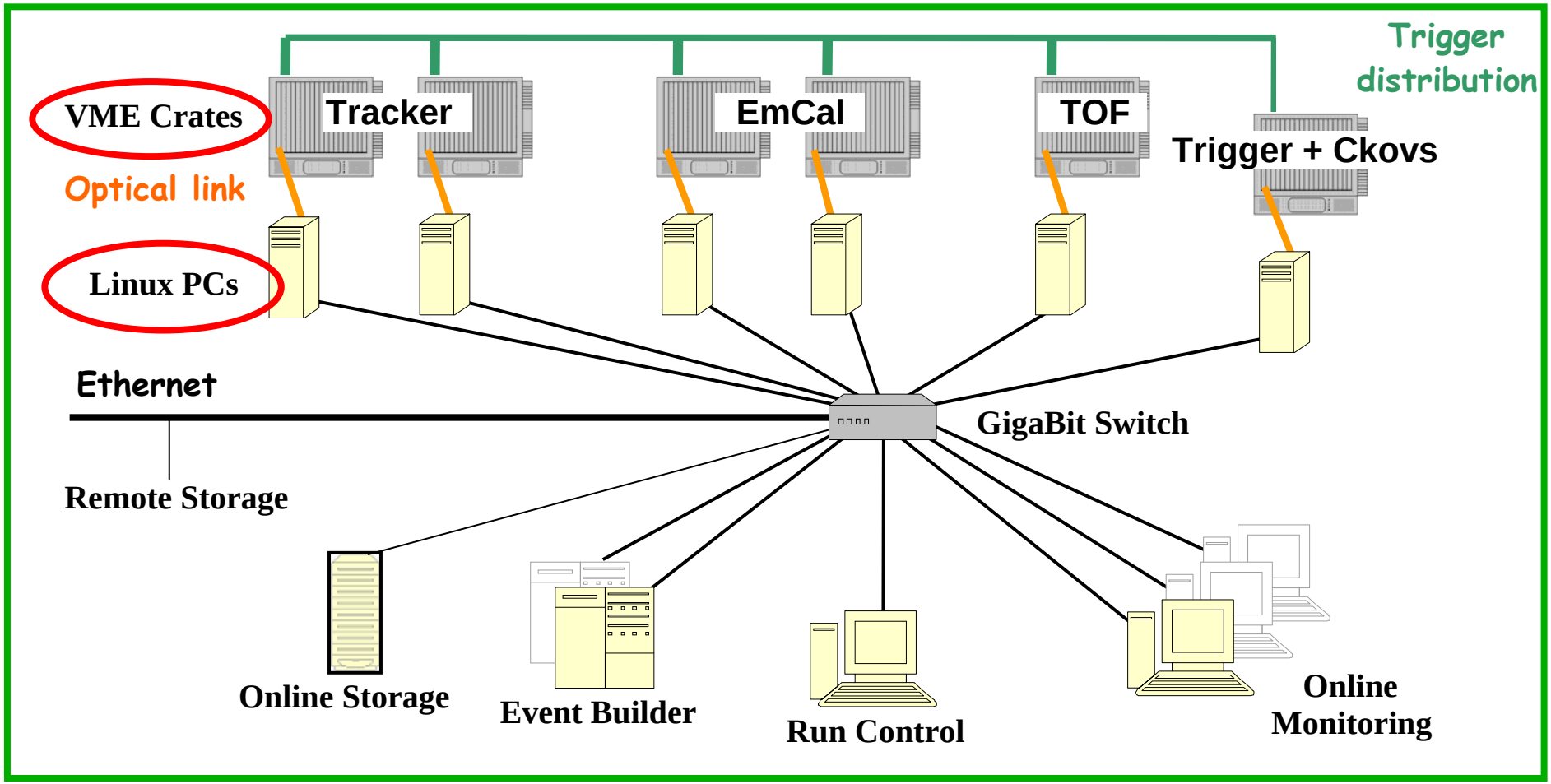

Tracker

- Sensors: VLPC
- Front End Electronics:
  - Analog to Digital (Pulse Ht + Time stamp: AFE IIt boards sitting in the VLPC cassettes
  - Digital Data Buffer: VLSB (512 ch/module, 4 modules/cryo-cooler)
- Number of Channels
  - 2 x 4096 ADC
- Fully specified in hardware
  - Firmware development needed

TOF Baseline

- **Sensors:**

  TOF0: Hamamatsu R4998

  TOF1 and TOF2: R4998 or R7761 (depending on Magnetic field shielding)

CHARACTERISTICS (at 25°C) R4998

Parameter		Min.	Typ.	Max.	Unit
Cathode Sensitivity	Luminous (2856K)	60	70	—	μA/lm
	Radiant at 420nm	—	72	—	mA/W
	Blue (CS-5-58 filter)	—	9.0	—	μA/lm-b
Anode Sensitivity	Luminous (2856K)	100	400	—	A/lm
	Radiant at 420nm	—	4.1×10^5	—	A/W
Gain		—	5.7×10^6	—	—
Anode Dark Current (after 30min. storage in darkness)		—	100	800	nA
Time Response	Anode Pulse Rise Time	—	0.7	—	ns
	Electron Transit Time	—	10	—	ns

Parameter		Description/Value	Unit
Spectral Response		300 to 650	nm
Wavelength of Maximum Response		420	nm
Photocathode	Material	Bialkali	—
	Minimum Effective Area	20	mm dia.
Window Material		Borosilicate glass	—
Dynode	Structure	Linear-focused	—
	Number of Stages	10	—

TOF Options

- **Timing is affected by the signal amplitude**

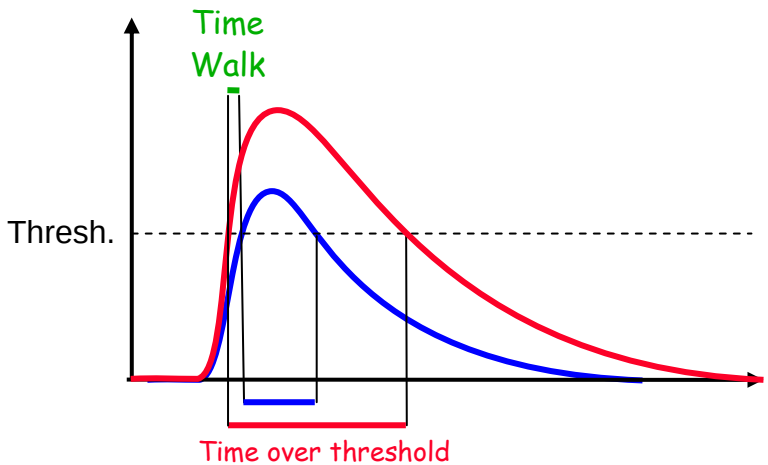

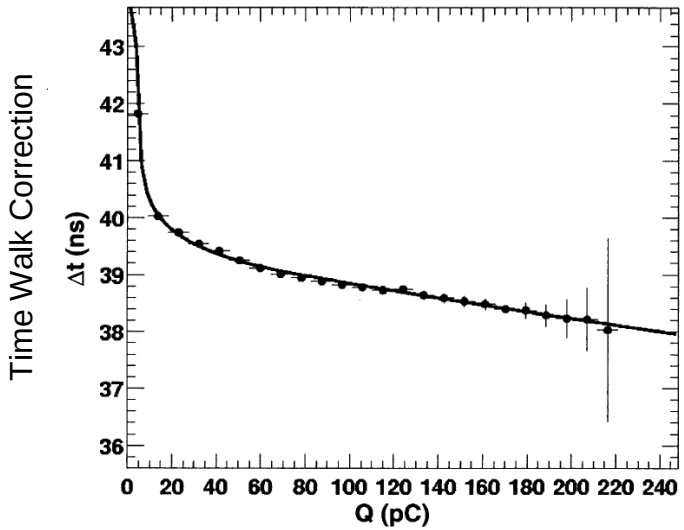

Example from Harp

- **2 Usual Solutions:**
  - **Use Constant Fraction Discriminator (CFD)**
  - **Measure amplitude and correct**

TOF Options

Option 1. Constant Fraction Discriminator (CFD)

The time walk is corrected automatically in the discriminator

Threshold value depends on the amplitude

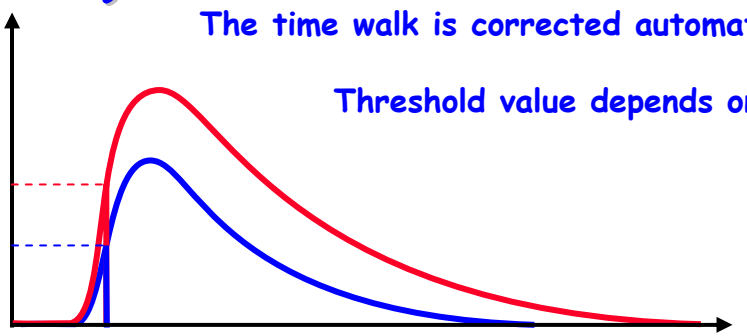

- **Advantage: Easy Cabling and No ADC**

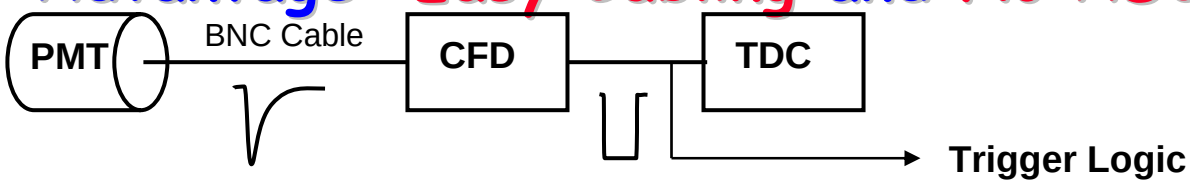

- **Drawback**
  - No information at all on the charge (Energy Deposit)
- **Cost: TDC + ~ 125 EUR/ch (CFD)**

TOF Options

Option 2. Measure the Charge with a QDC

- Advantage: More Precise and Good Charge Measurement
- Drawback
  - General MICE ADC problem (No suitable QDC exists yet!)
  - Requires Splitters
  - More cabling

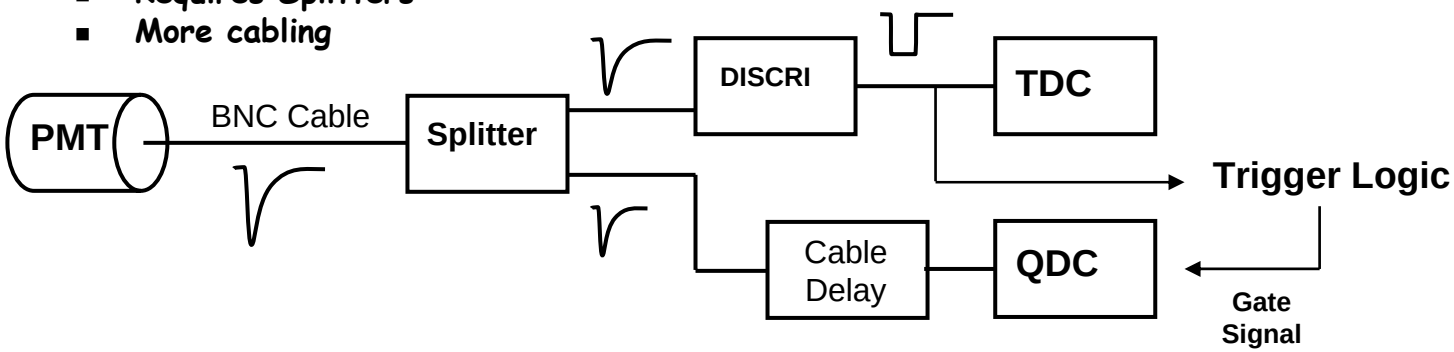

- Cost: TDC + ~ 125 EUR/ch (DISC)
  ~ 200 EUR/ch (QDC)
  ~ Delay Cables (~20 m/ch)

(Assuming free splitters)

TOF Options

Option 3. Measure the Charge with any available Solution

- Same Advantages and Drawbacks as 2.
- Cost: TDC +~ 125 EUR/ch (DISC)
  ~ ??? EUR/ch (ADC)
  ~ Delay Cables (~20 m/ch)

(Assuming free splitters)

TOF Options

Option 4. Measure the Charge with Time Over Threshold Principle

- Advantage: Easy Cabling and
  Charge Measurement (not linear though)
  Good Precision for Time Walk Correction

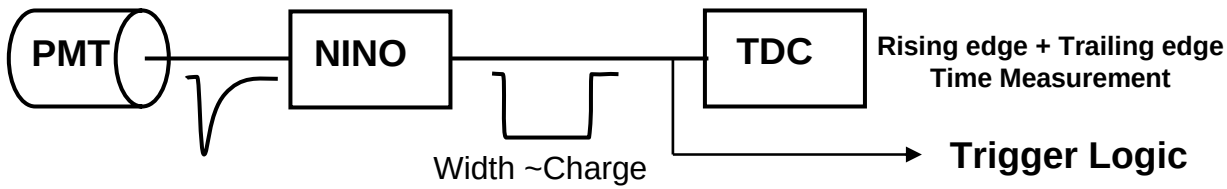

- NINO = ASIC developed by CERN/MIC for Alice TOF
  Discriminator with ToT "proportional" to the Charge (at low amplitude)
  Proven technique, providing 50 ps resolution (IEE TNS Vol 51-5 (2004) 1974-1978)
  Very Cheap: 2 EUR/ch

- Drawback
  - Requires Board development !
- Cost: TDC + Discri. board production (~50 EUR/ch)

EmCal Baseline

- **Sensors:**

  Hamamatsu R1355 (100 in hand, Ludovico is trying to find the other 140…)

  Modified for differential output (100 Ohms)

Tube Diameter	Type No.	❶ Spectral Response Range (nm) / Curve Code	❷ Outline No.	❸ Socket	❹ Dynode Structure / No. of Stages	Cathode Sensitivity ❺ Luminous Typ. (μA/lm)	❻ Blue Typ. (μA/lm-b)	❼ Q.E. at Peak Typ. (%)	Anode Sensitivity ❽ Anode to Cathode Voltage (Vdc)	❾ Current Amplification Typ.	❿ Luminous Typ. (A/lm)	⓫ Dark Current (nA) Typ.	Max.	Maximum Rating ⓬ Anode to Cathode Voltage (Vdc)	Average Anode Current (mA)
	R1398	185 to 650/B-D	⑰	E678-14C*	LINE/ 10	95	11.0	27	1500 ㊱	2.1×10^6	200	10	200	1900	0.2

Typical Time Response ⓭ Rise Time Typ. (ns)	Transit Time Typ. (ns)	T.T.S. Typ. FWHM (ns)	Coincident Resolving Time (ns) / Scintillator	⓮ Typical Pulse Height Resolution (%) / Scintillator	Stability ⓯ Long Term (%)	Short Term (%)	Pulse Linearity ⓰ ±2% Deviation Typ. (mA)	±5% Deviation Typ. (mA)	Notes	Type No.
2.0	23	0.65	0.43/BaF_2	7.8	0.2	2.0	10	15	BOROSILICATE type (R1355) is available.	R1398

EmCAl Baseline

- **Front End Electronics:**
  - Splitters
  - Discriminators
  - TDC: CAEN V1190 (128 ch, ECL or LVDS input)
  - ADC: No Baseline defined yet
- **Number of Channels**
  - 240 ADC
  - 120 TDC in the Baseline

  Time information is useful for
    - Hit Position information in the direction // to the slab
    - Suppression of muon decay background (the muons are stopped in the EmCal and ready to decay when the next muon arrives, disturbing PID)

  -> My personal feeling: TDC needed for all the channels

EmCal Baseline

- EmCal Connection Scheme (Half EmCal)

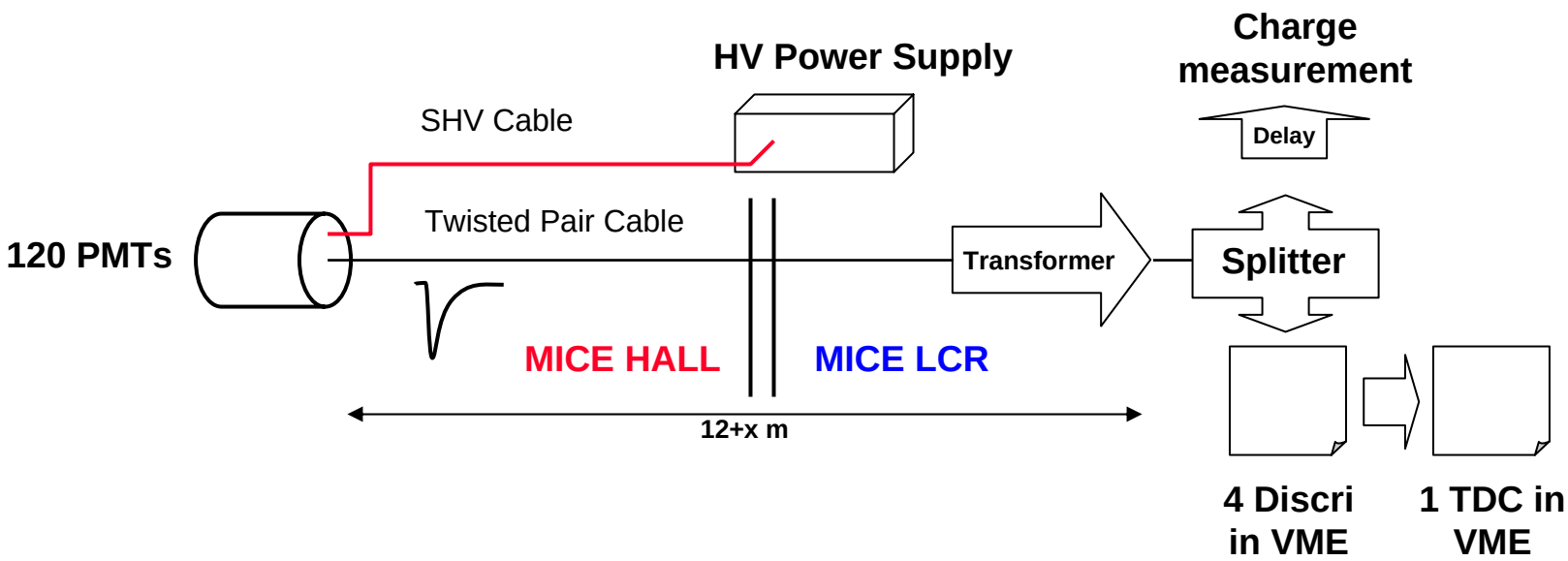

EmCal Charge Measurement Options

Option 1. Conventional gated QDC

- **Advantages**
  - Familiar, proven design
  - Standard VME board, well documented
  - Support from the company (CAEN), the equipment have a long live after MICE
- **Drawbacks**
  - The module does NOT exist yet, prototype could be delivered at the end of the year
  - Deadtime
    - IN REALITY – ELIMINATES THIS OPTION MOST LIKELY
- **Cost**
  - Transformers
    + Discriminators (125 EUR/Ch)
    + TDC (60 EUR/ch)
    + QDC (200 EUR/ch)
    + Delay Cables

EmCal Charge Measurement Options

Option 2. QIE (TeV IPM)

- **Advantages**
  - Probably no need for delay cable
  - The transformer can probably be included in the front end board (if we re-layout the board…)
  - Could be used for TOF (or CKOV) charge measurement
- **Drawbacks**
  - Development Risk
  - Not VME readout, makes the DAQ more tricky. Probably OK but who knows…
- **Cost**
  - + QIE FEB (??? EUR/ch)
    + PC BC (??? EUR/ch)
    + Discriminators (125 EUR/Ch)
    + TDC (60 EUR/ch)

About $200/ch

EmCal Charge Measurement Options

Option 3. 200 MHz Flash ADCs

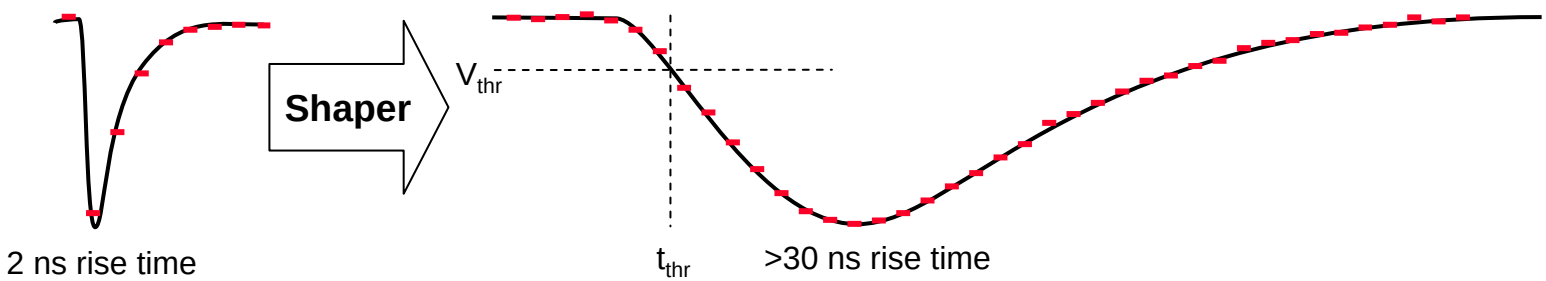

If we can fit the rising edge, time resolution can be much higher than the 5 ns of the sampling rate.

- **Advantages**
  - No Splitter, no delay, no discri, no TDC !
  - Cabling very easy
  - Equipment has a long after MICE life
- **Drawbacks**
  - Transformer -> Shaper
  - Time resolution ?
- **Cost**
  - Flash ADC (450 EUR/ch)
    + Shaper (??? EUR/ch)
    + VME Crate (6 kEUR)

DAQ Front End - Summary

- Tracker Baseline is defined
- TOF Baseline is well defined and several options will be tested
  - But we need to coverage on exact implementation as soon as possible
    - Frascati TB?
  - ADC solution not in hand
- EmCal Baseline is not clear (Charge measurement)
  - TB at Frascati will define direction

Controls and Monitoring Architecture

What is EPICS?

- Experimental Physics and Industrial Control System
  - Collaboration
  - Control System Architecture
  - Software Toolkit
- Integrated set of software building blocks for implementing a distributed control system
- www.aps.anl.gov/epics

Why EPICS?

- Availability of device interfaces that match or are similar to our hardware
- Ease with which the system can be extended to include our experiment-specific devices
- Existence of a large and enthusiastic user community that understands our problems and are willing to offer advice and guidance.

EPICS Architecture

Operator Interface (OPI)

OPI – a workstation running EPICS tools.
Operating Systems: Linux and Windows XP.

LAN – communication path for Channel Access (CA), the EPICS communication protocol.

Local Area Network (LAN)

Input Output Controller (IOC)

IOC – platform supporting EPICS run-time database.
Example: VME based PPC processor running vxWorks, Linux workstation.

MIL-STD-1553B Bus

- Restricted detector access while running
- Provides a robust and highly reliable connection to electronics in the remote collision hall
- Developed a queuing driver, device support, and a generic record
- 12 IOCs with ~70 1553 busses from the counting house to the detector and ~10 busses within the counting house

Online System

ALICE approach

- HLT embedded in the DAQ
- More than one hardware trigger → not straightforward to change trigger
  - But DAQ can be very flexible with standard technology. Easy to partition down to the level of the single front-end
- HLT / Monitoring

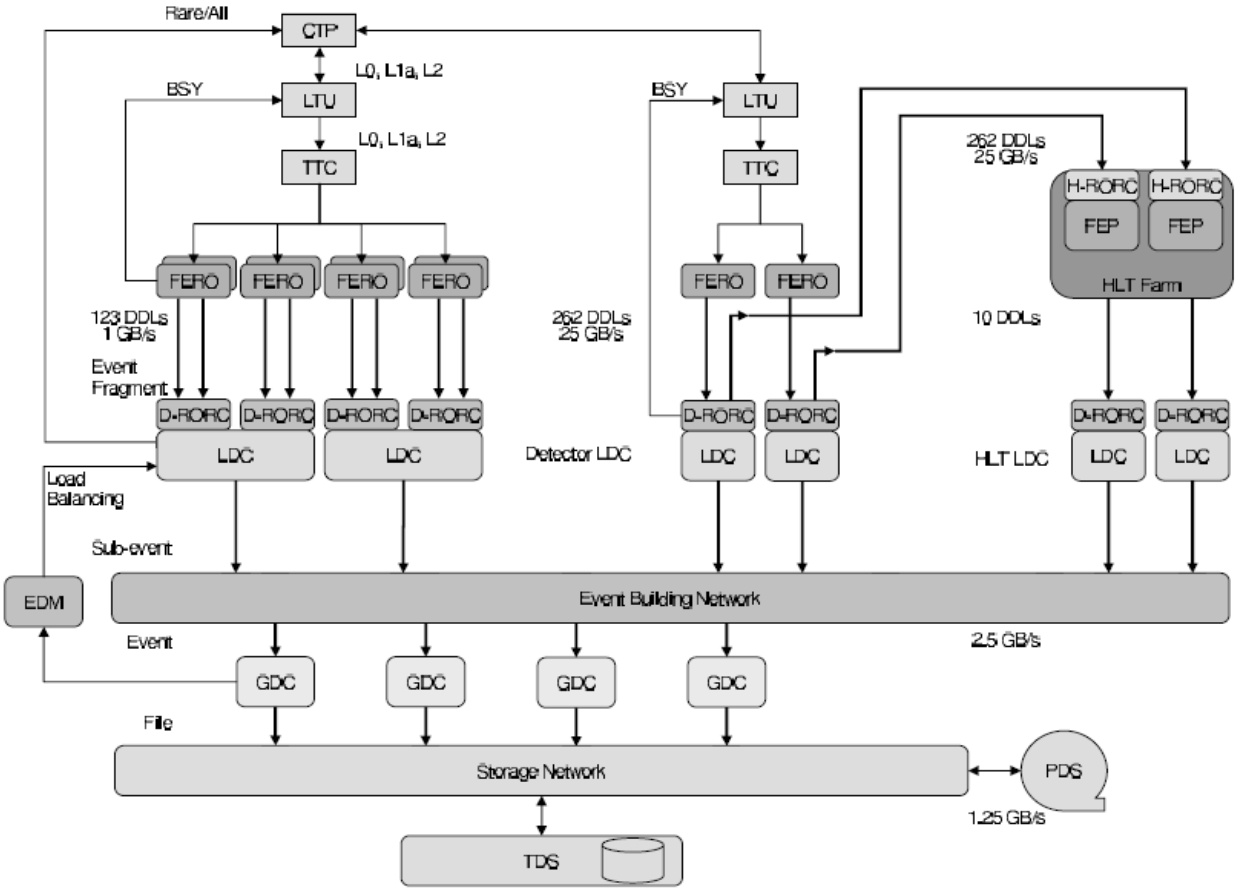

Alice HLT

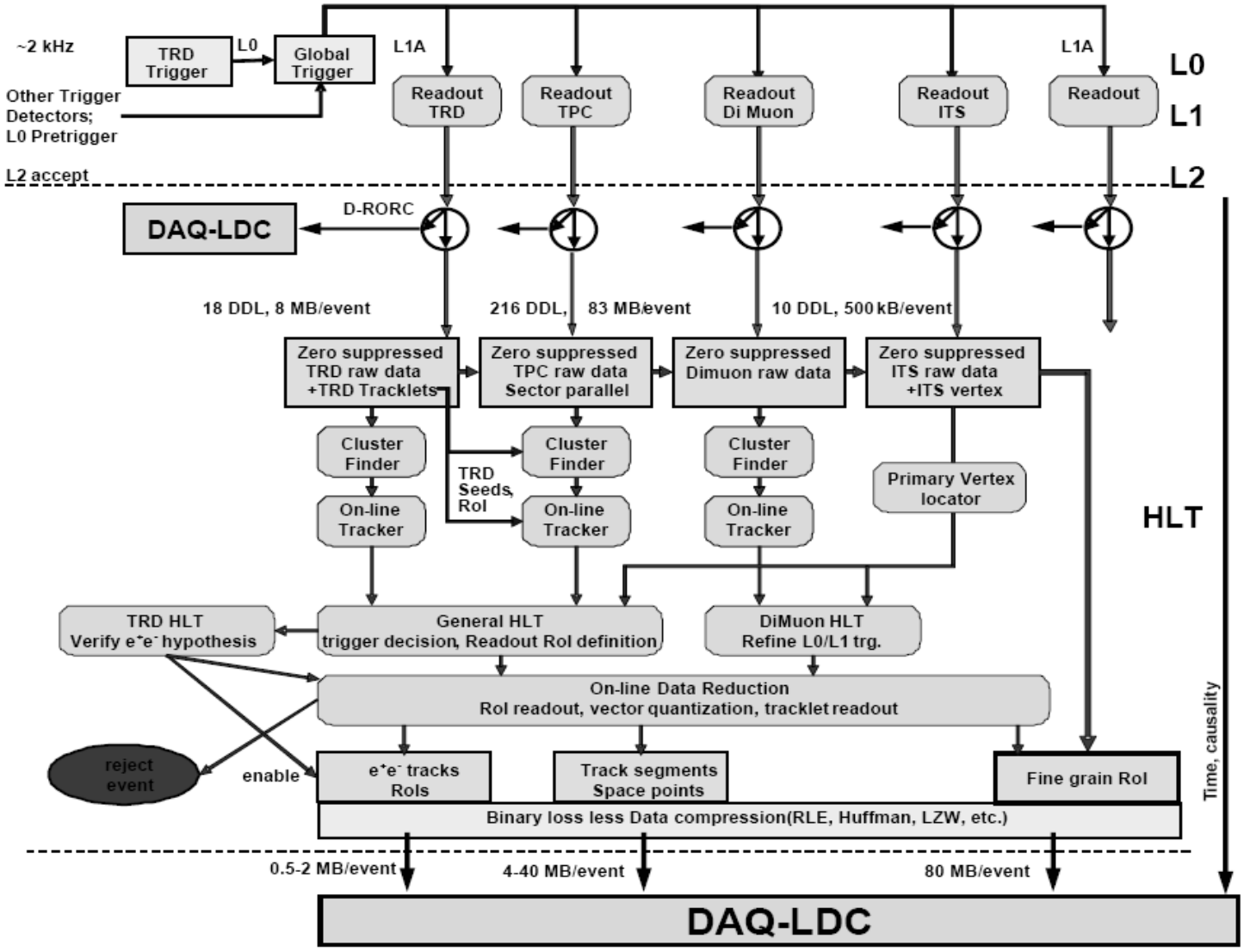
~2 kHz
TRD Trigger
L0
Global Trigger
L1A
L1A
L0
L1
L2
Other Trigger Detectors; L0 Pretrigger
L2 accept
Readout TRD
Readout TPC
Readout Di Muon
Readout ITS
Readout
DAQ-LDC
D-RORC
18 DDL, 8 MB/event
216 DDL, 83 MB/event
10 DDL, 500 kB/event
Zero suppressed TRD raw data +TRD Tracklets
Zero suppressed TPC raw data Sector parallel
Zero suppressed Dimuon raw data
Zero suppressed ITS raw data +ITS vertex
Cluster Finder
Cluster Finder
Cluster Finder
TRD Seeds, RoI
Primary Vertex locator
On-line Tracker
On-line Tracker
On-line Tracker
HLT
TRD HLT Verify e+e- hypothesis
General HLT trigger decision, Readout RoI definition
DiMuon HLT Refine L0/L1 trg.
On-line Data Reduction RoI readout, vector quantization, tracklet readout
reject event
enable
e+e- tracks RoIs
Track segments Space points
Fine grain RoI
Binary loss less Data compression(RLE, Huffman, LZW, etc.)
Time, causality
0.5-2 MB/event
4-40 MB/event
80 MB/event
DAQ-LDC

Ready-to-use GUIs

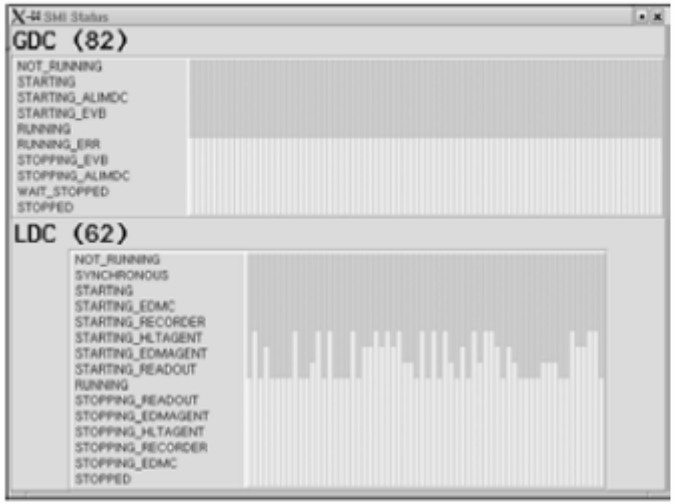

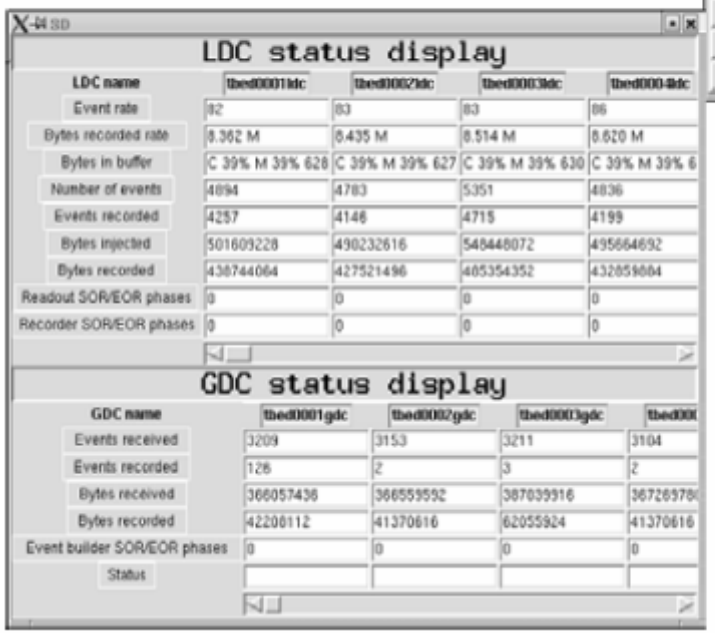

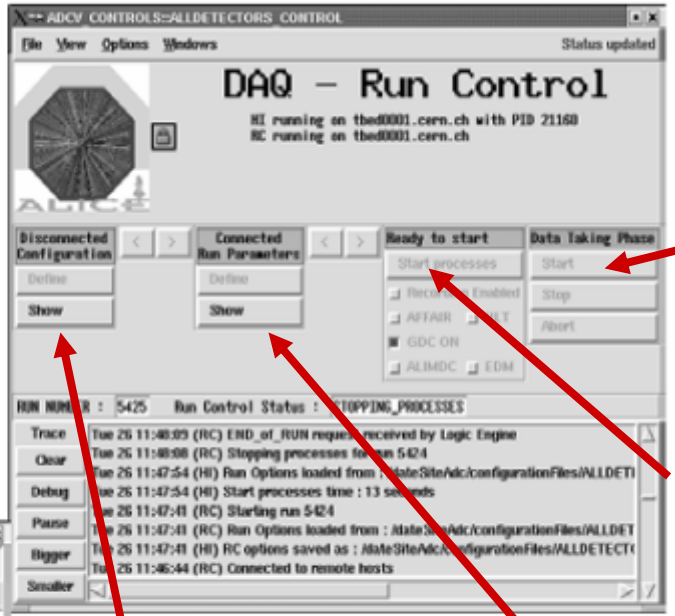

Start/stop

Select active processes and start them

Configure and partition

Set run parameters and connect

Run control should be implemented as a state machine for proper handling of state change

Ready-to-use GUIs

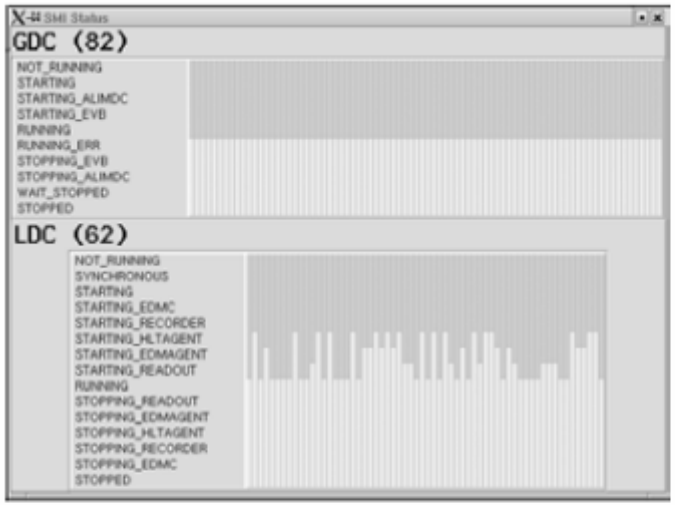

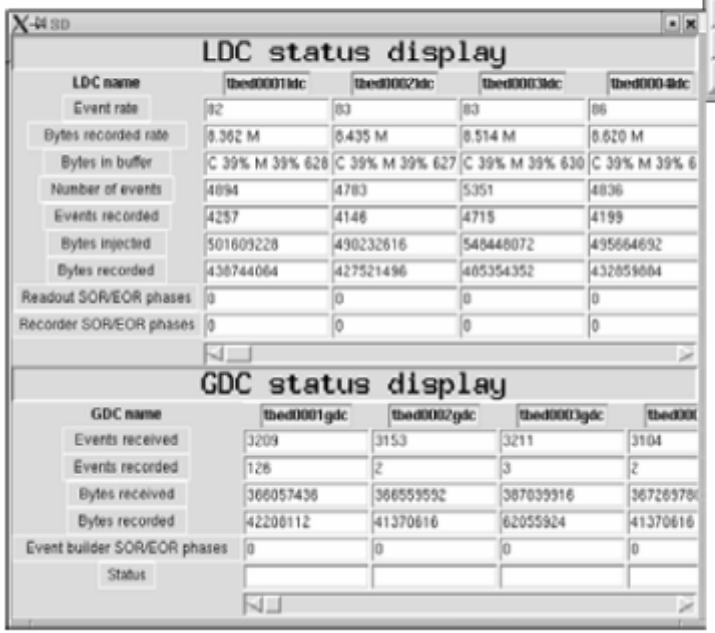

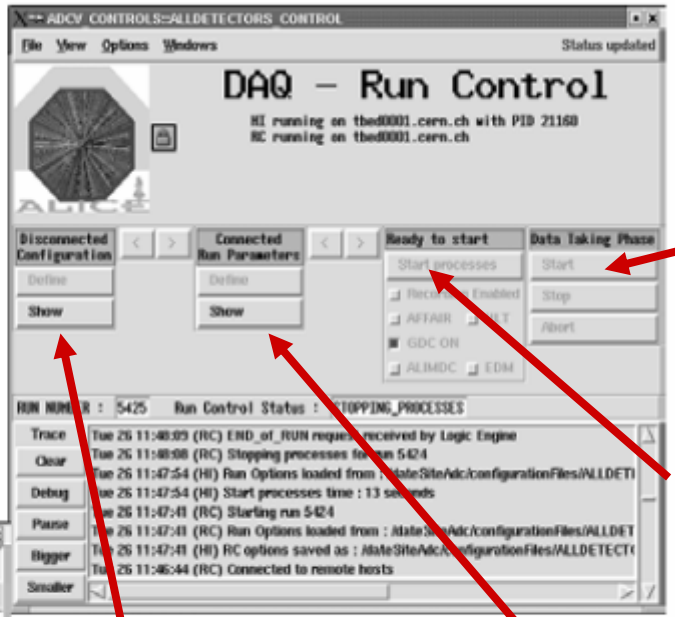

Start/stop

Select active processes and start them

Configure and partition

Set run parameters and connect

Run control should be implemented as a state machine for proper handling of state change

Conclusions

- DAQ – Data
  - Front end
    - Tracker – Specified
    - TOF – Partially specified
    - EmCal – Not specified
  - Backbone (Computers, interface, VME, etc)
    - Specified
  - Online system
    - Chosen – ALICE (needs to be confirmed)
    - MUCH WORK TO BE DONE
- Controls and monitoring
  - Architecture specified
    - EPICS
  - MUCH WORK NEEDS TO BE DONE
    - EPICS experts need to get going
- Online
  - Alice system chosen
  - MUCH WORK NEEDS TO BE DONE