MTA RF TEST PROGRAM

Yağmur Torun
Illinois Institute of Technology

Muon Collaboration Weekly Meeting
Apr. 15, 2005 - Fermilab

NCRF Issues for Muon Collaboration

- Neutrino Factory cooling channel has high gradient (16MV/m) 201MHz pillbox cavities with thin windows in strong non-uniform magnetic field (2.5T). We have to
  - demonstrate adequate performance in this previously unexplored regime
  - find ways to mitigate any problems
  - identify useful diagnostics
- MICE has detectors close to rf
  - We need reliable estimates of background levels

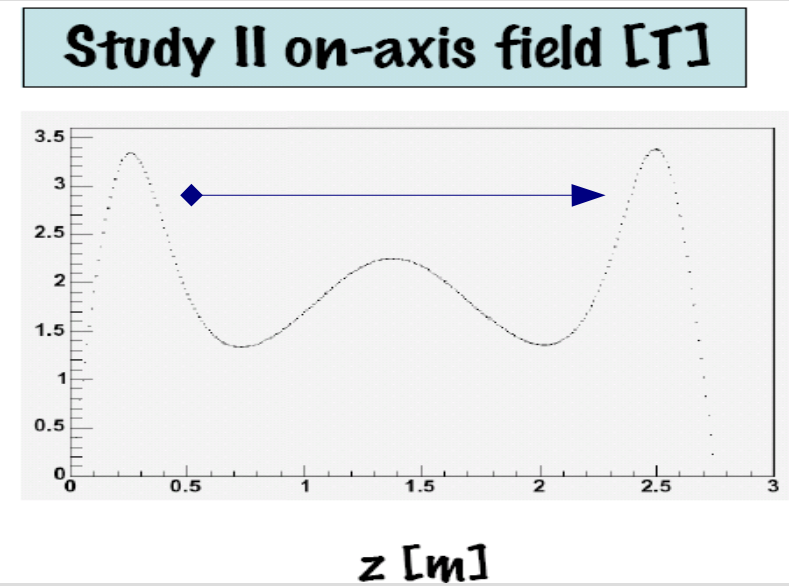

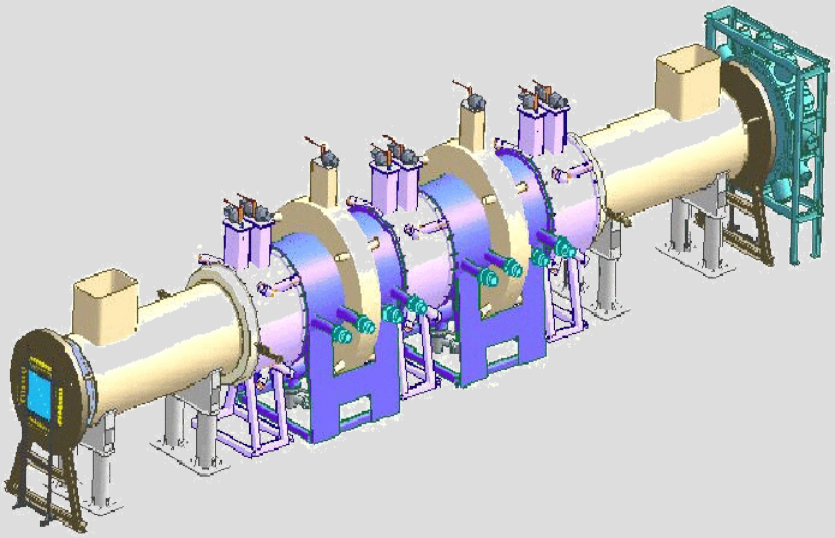

Lab-G Program

- Worked with ¼ scale models (805MHz) to explore the underlying physics and gain experience with practical problems
  - Measured dark currents over 14 orders of magnitude using 6-cell open-iris cavity
  - Discovered onset of breakdown at low magnetic fields ("Moretti effect") -- potential problem for NuFact/MICE
  - Established Cu as the weak link for high gradient
    - Mitigated locally with TiN coating on Be windows
  - Operated with thin windows, some tuning/stability issues at high power
  - Norem et al. Phys. Rev. STAB 6, 072001 (Jul 03), another one just submitted
  - Operation stopped at the end of 2003 as Fermilab reclaimed spare tube due to shortage at Linac

MTA Program

- Will continue to operate 805MHz pillbox as a testbed to study
  - Breakdown properties of different materials using buttons
  - Grid terminations
  - Different window materials and coatings
  - Conditioning and performance in high magnetic field in solenoidal and gradient configurations
- Full-size 201MHz prototype cavity to explore
  - High power conditioning/operation
  - Background rates
  - Some magnetic field
- Muons Inc. high pressure GH2 pillbox cavity tests
- Also, LH2 absorber tests + future beam

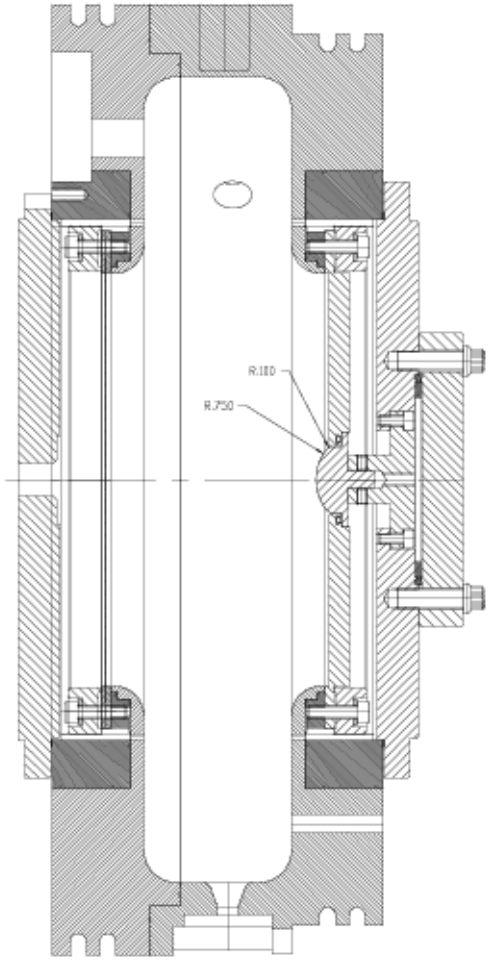

Detectors

- Simple radiation meters to track conditioning progress
- Scintillator+PMT counters for small rates
- Scintillating fibers for small rates
- Cryogenic Ge diode counter for x-ray energy spectrum at low rate
- NaI+PMT counter for x-ray energy spectrum at low rate
- Polaroid film to check emitters in cavity
- Black and white film to record dark current trajectories in magnetic field and x-ray flux
- Temperature probes to monitor cavity parts
- Microphones for spark detection

Data Acquisition

- PC based auxiliary system was built for the Lab-G program
- Lab-G went down before full commissioning
- System has
  - several channels of ADC
  - GPIB and CAMAC controllers
  - access to ACNET data on the network from rf control racks
  - 8mm tape storage
- Requires OS upgrade and some control software

Simulation

- A simple GEANT4 simulation of the Lab-G setup exists
- Lots of work in progress within G4MICE to evaluate detector performance in the presence of rf-induced background for MICE (R. Sandström, Geneva, M. Ellis, Imperial)
- G4MICE has features to handle
  - Generation of electrons from emitters on cavity windows with realistic distributions
  - Tracking in magnetic field
- Most of this can be carried over to simulation of the MTA
  - Need to implement the geometry/materials in detail (magnet, cavity, supports)

Current Status

- Magnet, power supply at MTA, 805MHz cavity will be moved soon, 201MHz cavity to be shipped later this summer
- Electronics moved from Lab-G to Linac
- All trays and cables installed at the MTA, connectors being installed
- Setting up detectors
- DAQ requires some work once cables are ready and some tuning when rf is turned on
- Safety and access details under negotiation
  - Muons Inc. almost ready to go
- Will need to take shifts over summer
  - Access to high power at 201MHz is limited
  - Hope to schedule visit by R. Sandstrom
- Details under http://mice.iit.edu/mta/