Magnetic field in lithium ring

R.C. Fernow
BNL

MC Friday Meeting

3 November 2006

Introduction

- use bent lithium rod for emittance exchange and 6D cooling (Skrinsky 1996)
- use “closed” ring with small acceleration gaps (Fukui 2005)
- had to use approximate field from dipole + straight rod
- Juan and I tried to find analytic solution to problem
- new improved numerical field model in ICOOL (3.01,β3.02)
- get field from set of current sheets
- matches circular cross section of the rod

Layout of current sheets

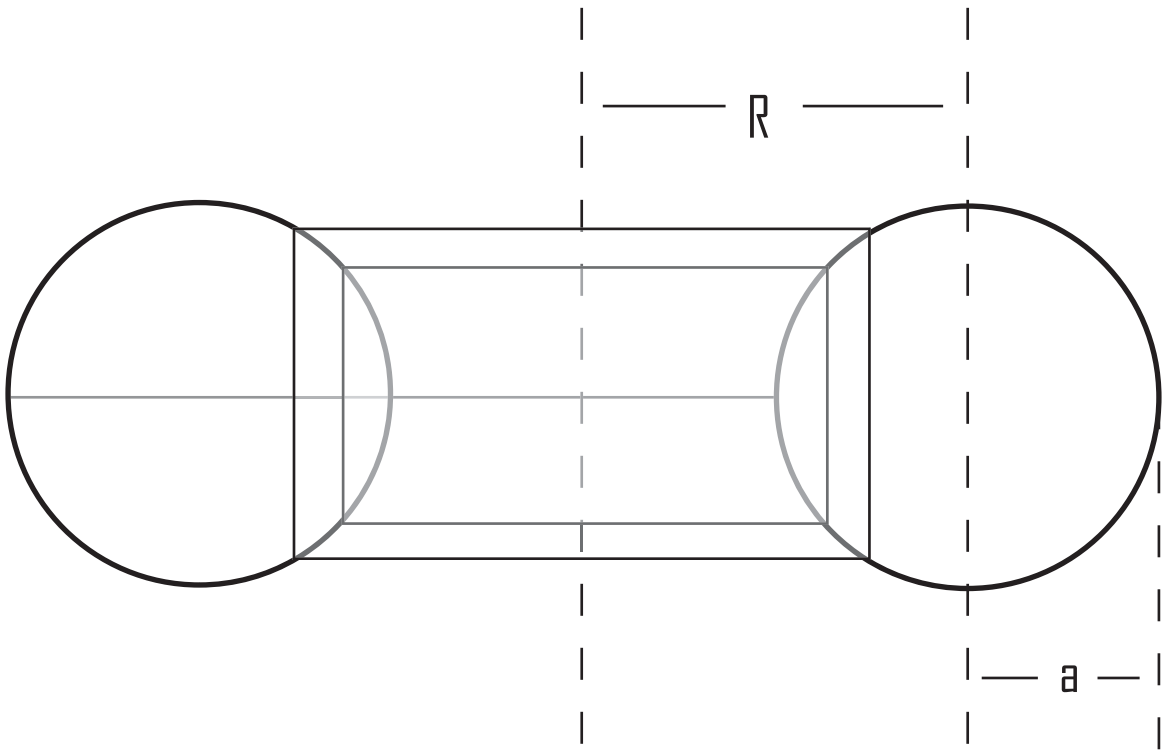

Field lines inside the rod

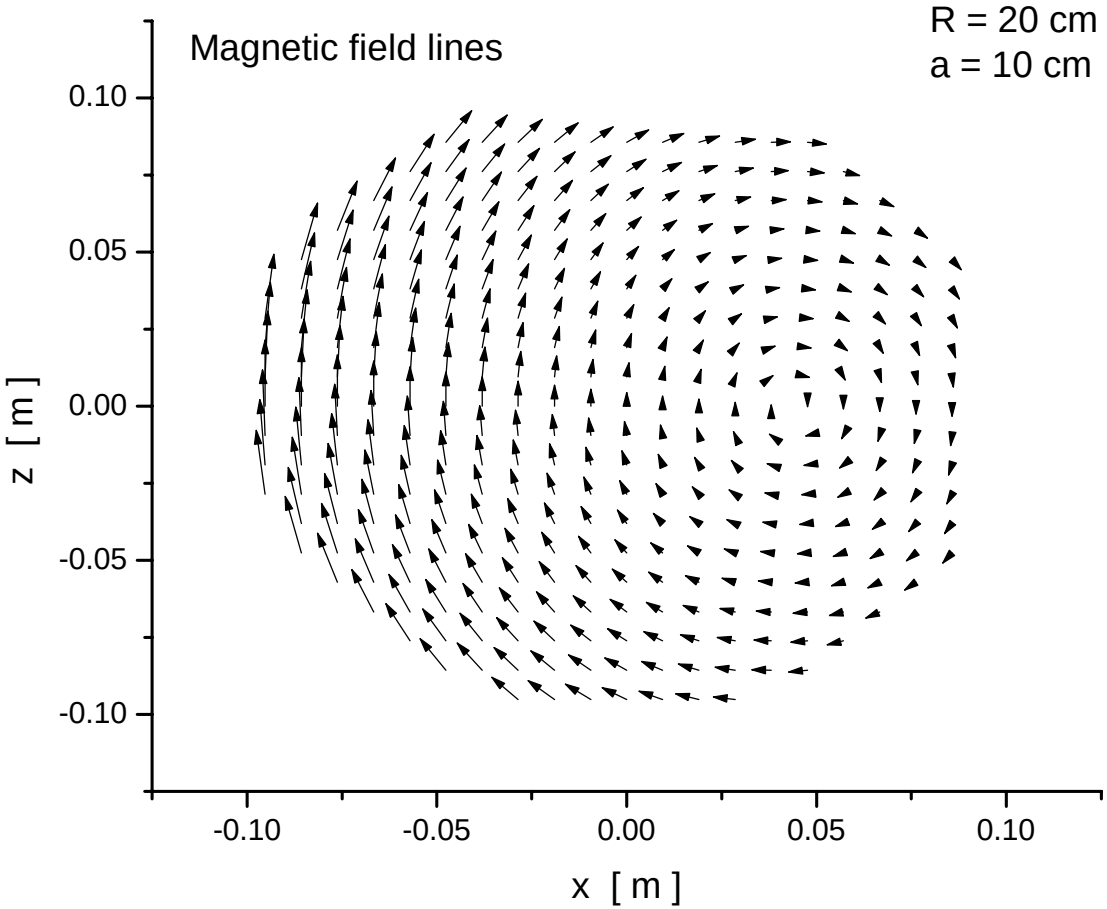

- B for straight rod is symmetric
- B stronger on inside
- center of circulation moves out

Center of circulation

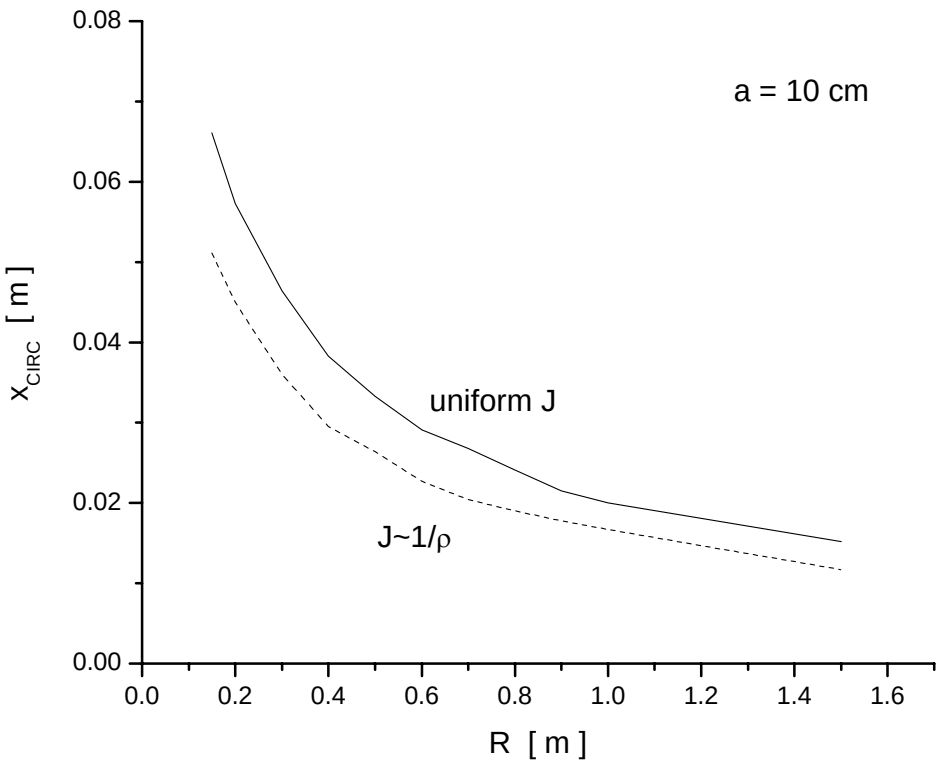
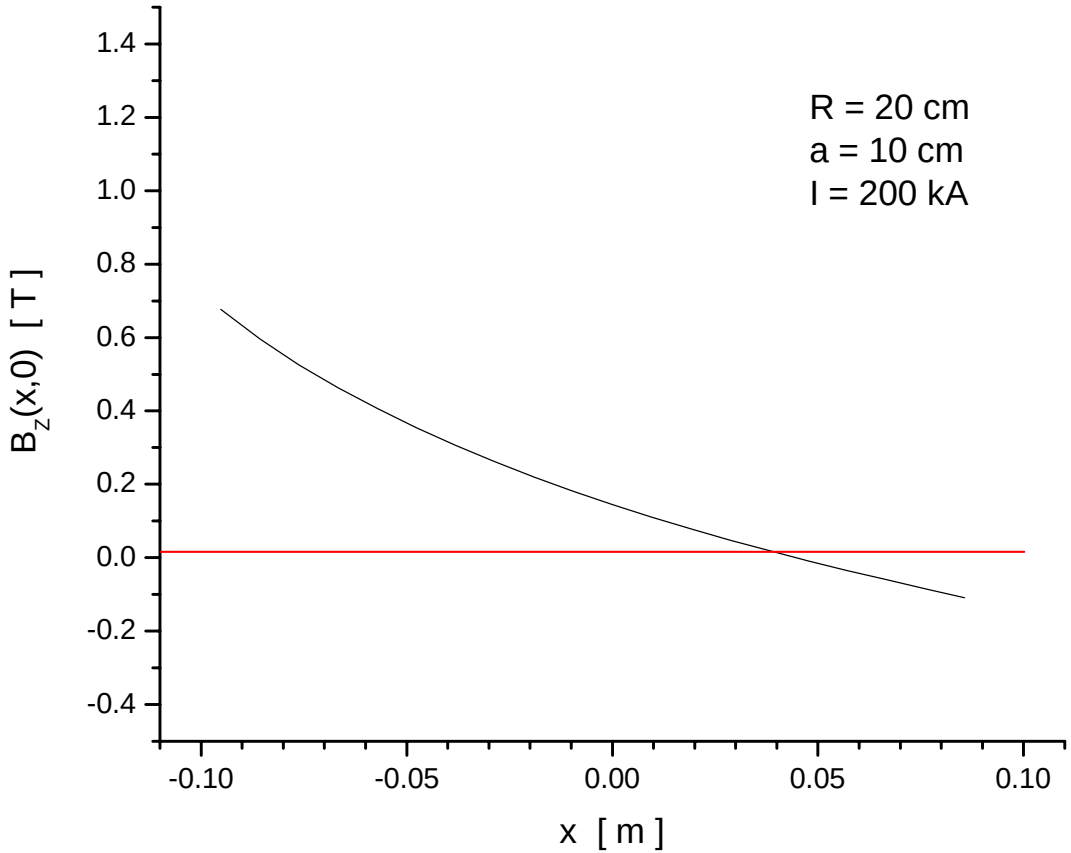
Vertical field across midplane in the rod