Beam Interaction Veto System

I
N
R
RUSSIAN ACADEMY OF SCIENCES
INSTITUTE
FOR NUCLEAR
RESEARCH

BIVS

Bolotov V., Lebedev V., Mazurova E.

STUD

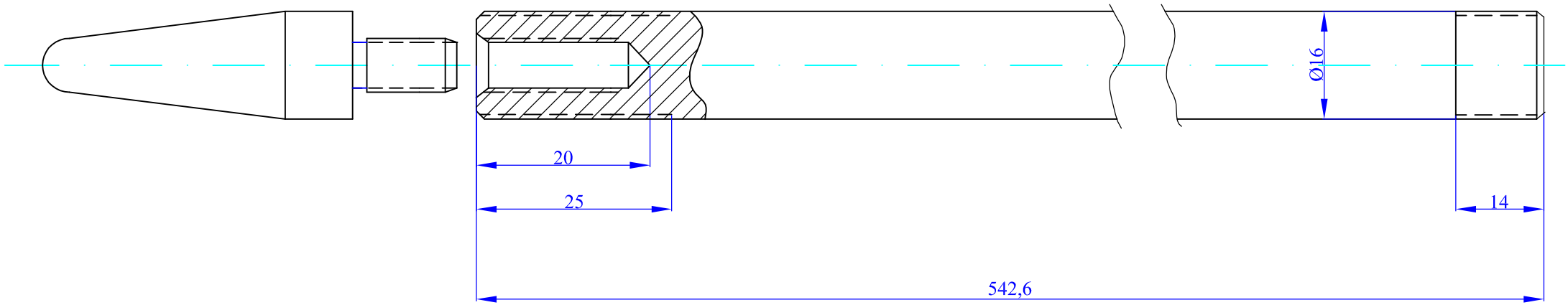

Fig.6d