Operations of MINOS Detector in Soudan

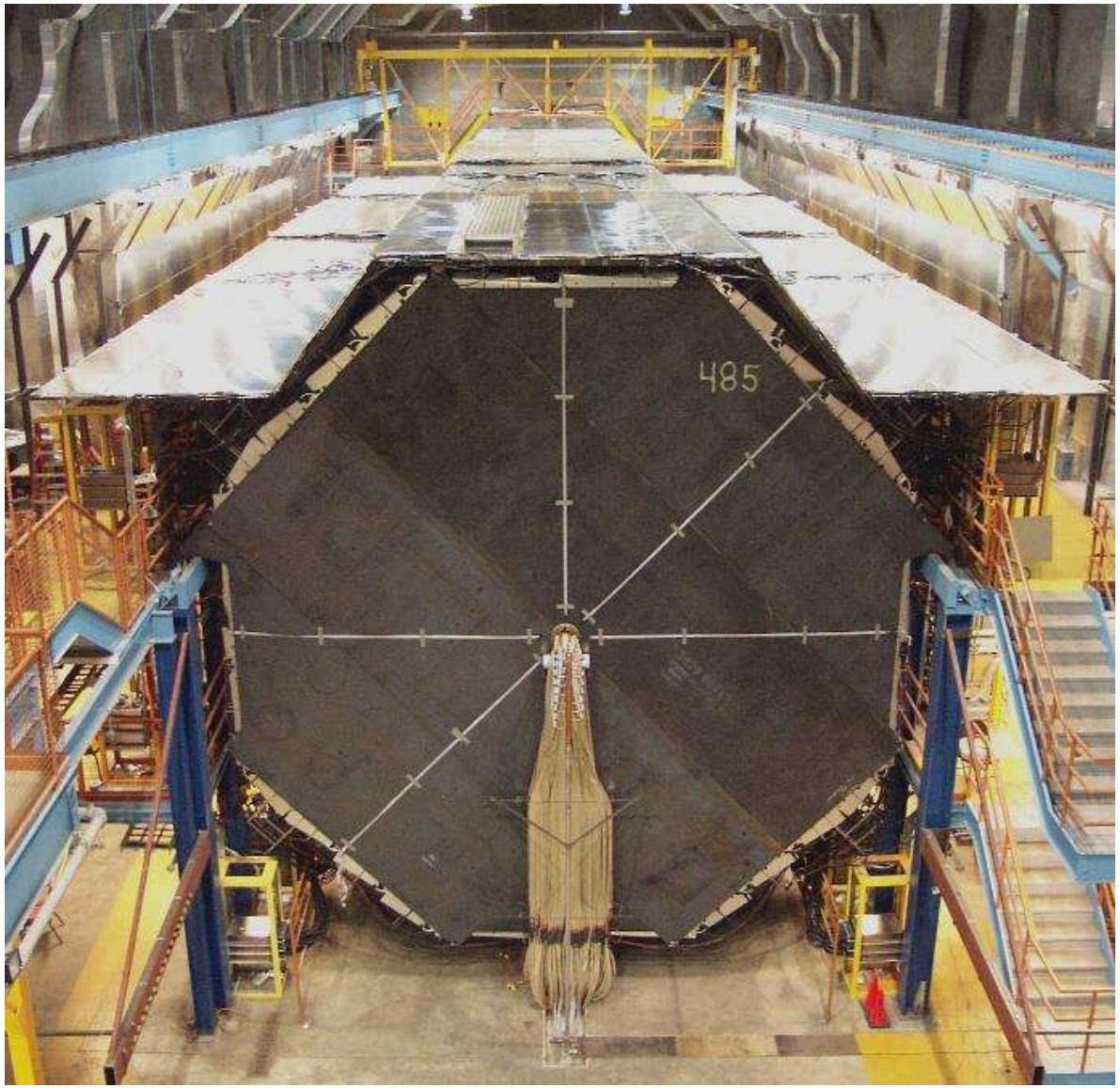

- Sergei Avvakumov

- November 3, 2003

Overview

- Status of MINOS Far Detector
- Detector subsystems performance
- Running the detector
- Operations – plans
- Summary

Status

- Detector construction completed June 2003 (plane 485 raised June 5th) on time and under budget
- Coil installation finished in July 2003
- Soudan lab staffing reduced – minecrew from 40 to 5, physicists from ~4-5 to 1-2
- Starting early August 2003 MINOS far detector started taking data with both supermodules enabled and magnetised, uptime ~80% (downtime due to detector maintenance)
- Remote operation of the Far Detector from Fermilab is in testing stage since September

Detector readout

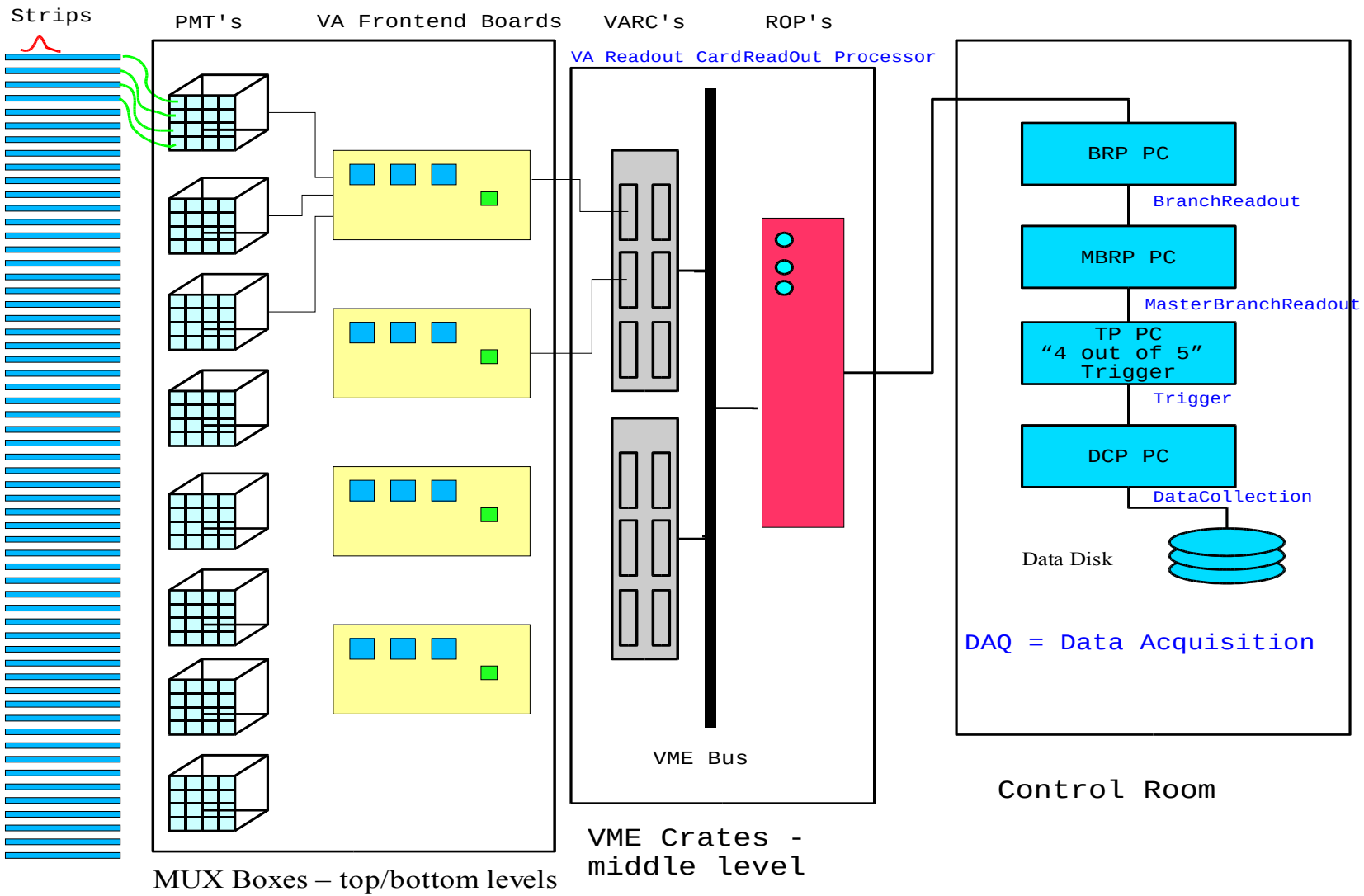

Detector Subsystems

- Scintillator + readout electronics – 1536 PMTs, readout channels. On average only ~2-3 channels not functional at any time.
- Magnetic field – both coils running smoothly since early August
- Data Acquisition – very stable (<1 crash per week). Single runs and automatic run sequences. User friendly interface – physicists are trained to use it in ~1 hour.
- Detector Control System – controls HV, magnet settings, rack protection systems, records environmental parameters - temperature, pressure, radon

Life before Neutrino Beam

- Collect cosmic data (calibration, astrophysics)
- Collect atmospheric neutrino data
- Fix all the teething problems
- Learn to run the detector with very high uptime (>90%)
- Remote detector operation

Cosmic Data

Cosmic muon event – calibration, astrophysics analyses – collected with rate ~ 1 Hz

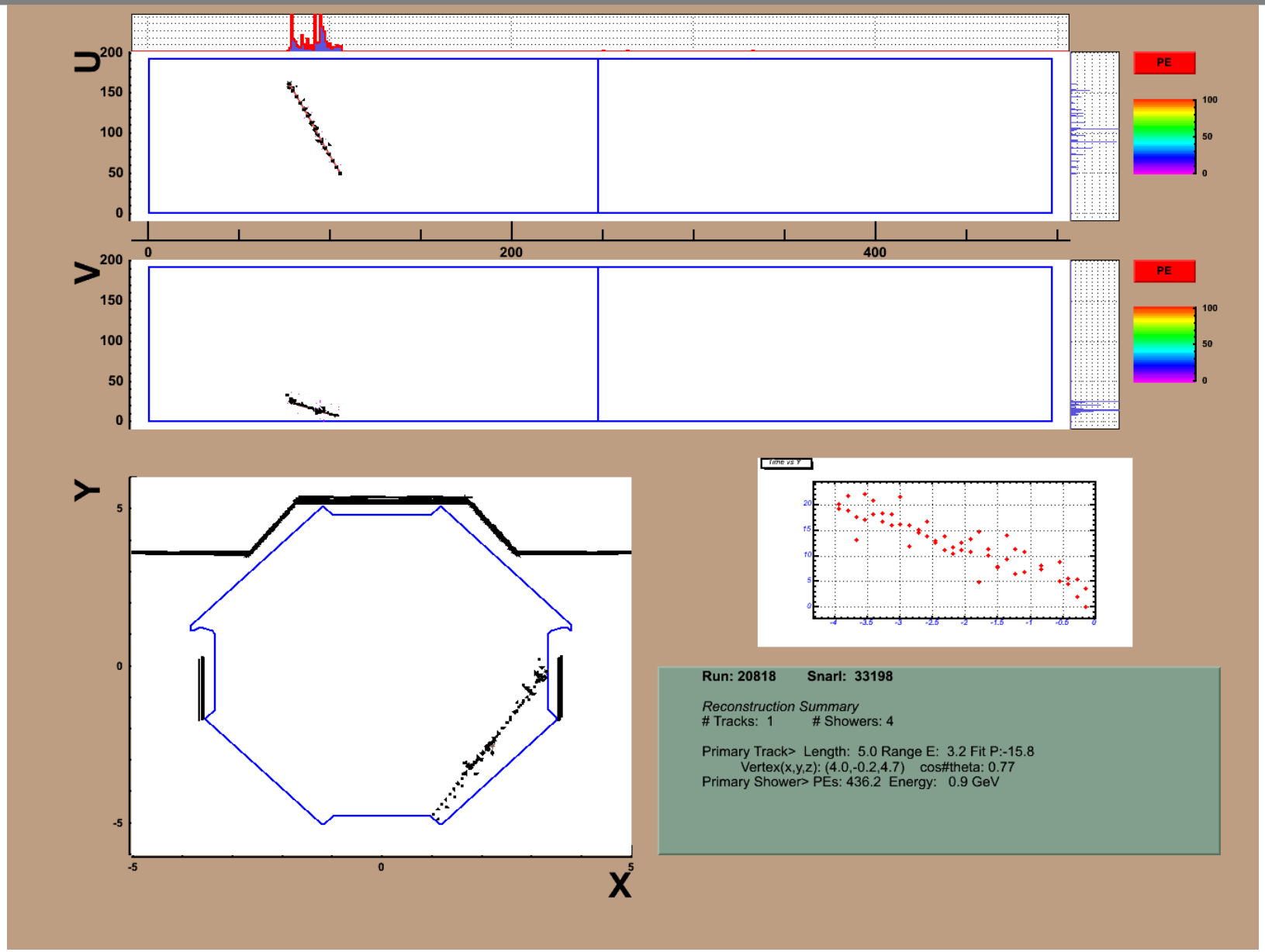

Atmospheric Neutrinos I - Contained event candidate

Contained neutrino event candidate - ~100 events expected before neutrino beam

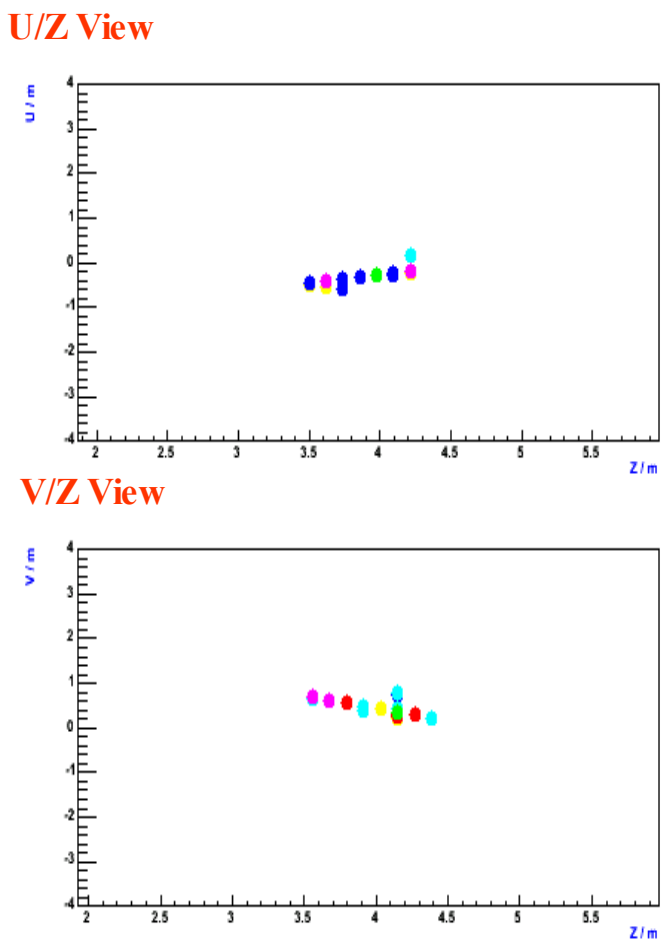

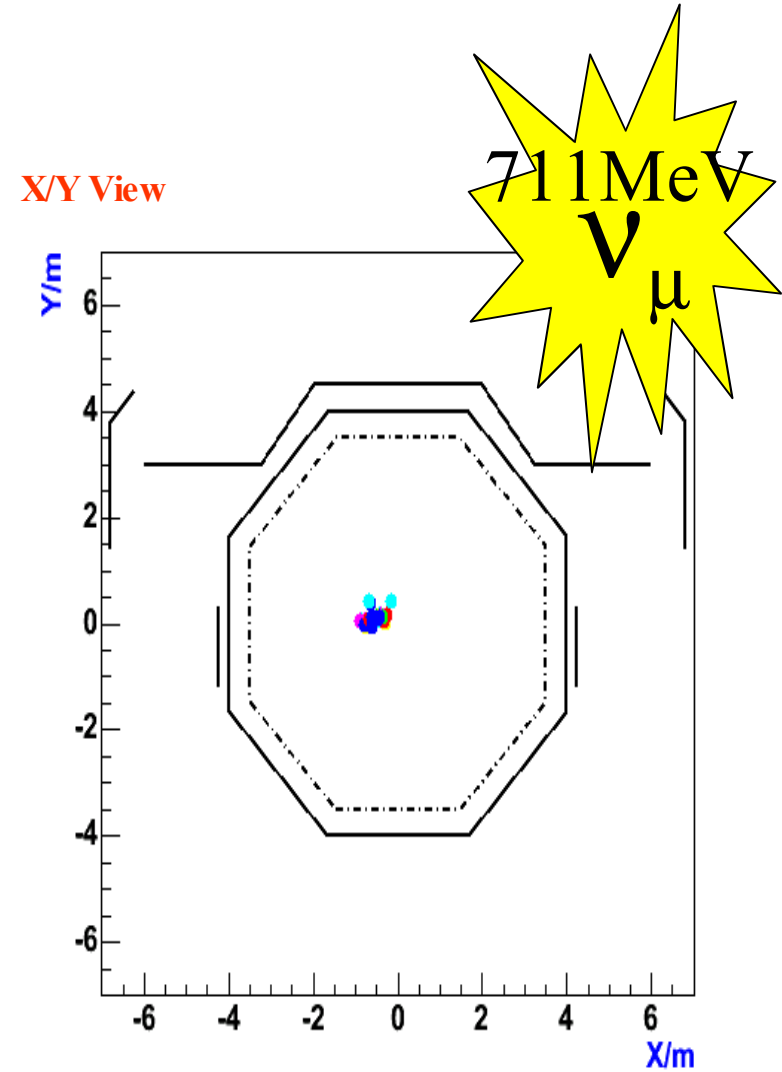

Atmosheric Neutrinos II – Upward going muons

Upward going stopping muon (May 2003 data)

Q = -1

P = 5.2 GeV

~140 upward μ events expected before neutrino beam

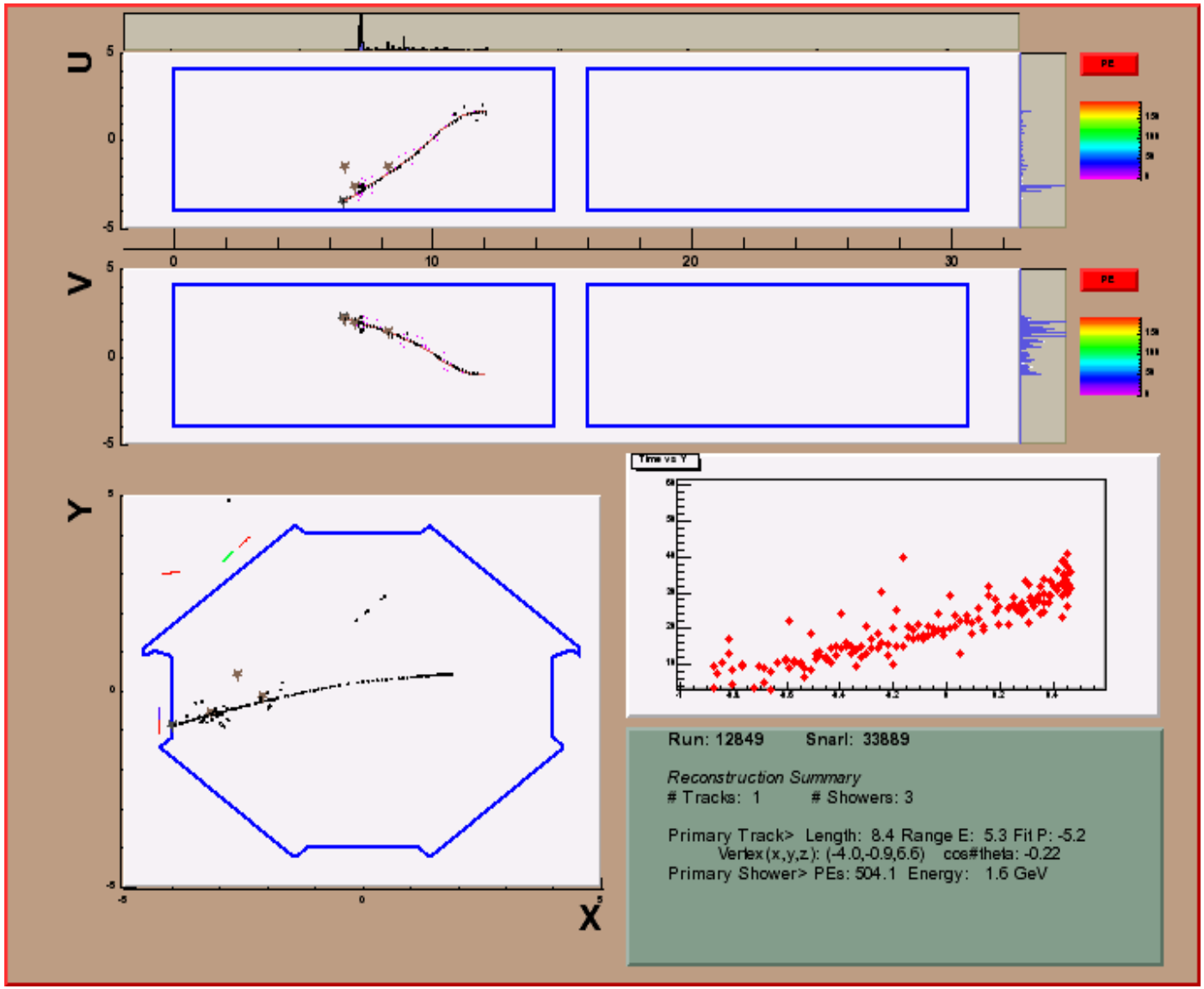

Remote detector operation

- Until now detector controlled from Soudan
- Plan to start remote detector operation from Minos Control Room at Fermilab (12NW) and (possibly) from control room in UK
  - Provide off shift coverage (5:30pm - 7:30am)
  - Additional data validation
  - Coordinate near and far detectors

Summary

- Collect atmospheric neutrino, cosmic data
- Improve uptime to >90%
- Switch to remote detector operation