Superconducting RF Module & Test Facility (SMTF)

Goal: Develop U.S. Capabilities in high gradient and high Q superconducting accelerating structure in support of the International Linear Collider, Proton Driver, RIA, 4th Generation Light Source and other accelerator projects of interest to U.S and the world physics community.

1.3 GHz ILC Cryomodule

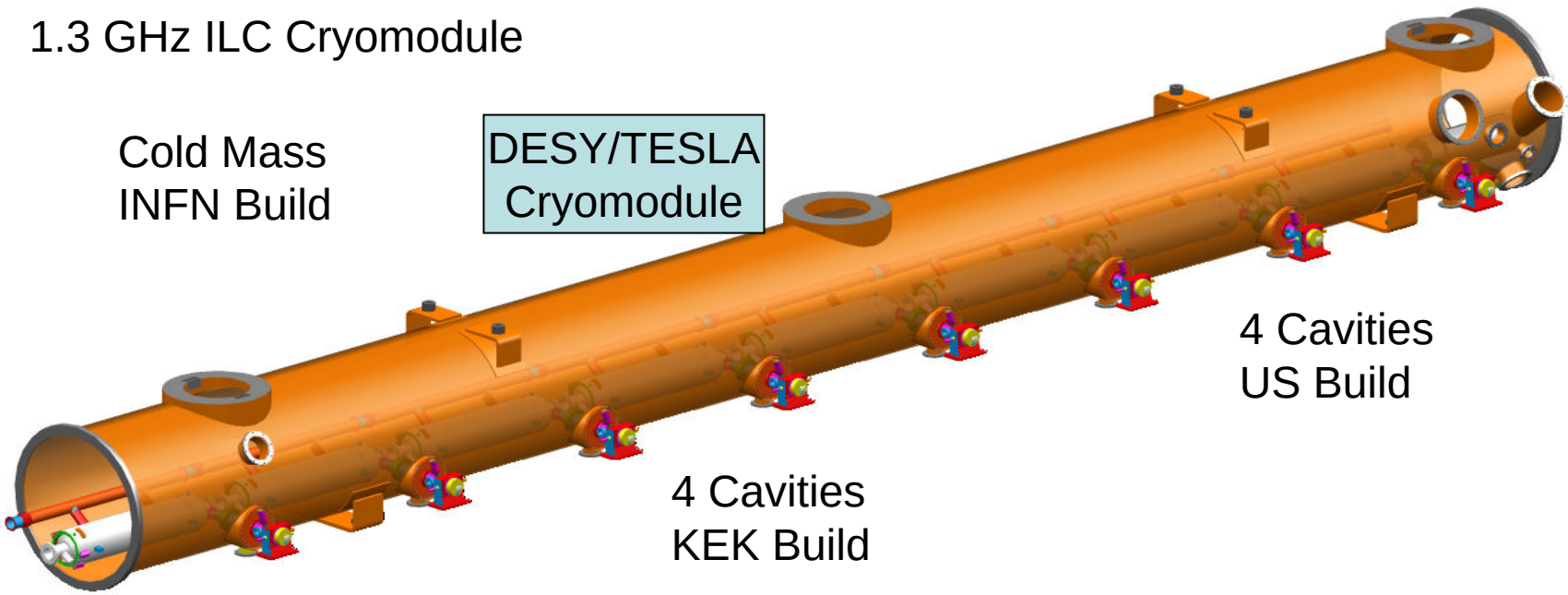

Talk at AEM Fermilab 2/14/05

SMTF Collaboration

Collaborating Institutions and their representative

- Argonne National Laboratory: *Kwang-Je Kim*
- Brookhaven National Laboratory: *Ilan Ben-Zvi*
- Center of Advanced Technology, India: *Vinod Sahni*
- Cornell University: *Hasan Padamsee*
- DESY: *Deiter Trines*
- Fermi National Accelerator Laboratory: *Robert Kephart*
- INFN, Pisa : *Giorgio Belletini*
- INFN, Frascati: *Sergio Bertolucci*
- INFN, Milano: *Carlo Pagani*
- Illinois Institute of Technology: *Chris White*
- KEK: *Nobu Toge*
- Lawrence Berkeley National Laboratory: *John Byrd*
- Los Alamos National Laboratory: J. *Patrick Kelley*
- Massachusetts Institute of Technology: *Townsend Zwart*
- Michigan State University: *Terry Grimm*
- Northern Illinois University: *Court Bohn*
- Oak Ridge National Laboratory: *Stuart Henderson*
- Stanford Linear Accelerator Center: *Chris Adolphsen*
- Thomas Jefferson National Accelerator Facility: *Swapan Chattopadhaya*
- University of Pennsylvania: *Nigel Lockyer*
- University of Rochester: Adrian Melissions

Proposal is being prepared to be submitted to Fermilab by Feb. 18th 2005.

Fermilab Perspective on SMTF

- Fermilab position as stated to ITRP is "Fermilab is ready to provide the leadership in forming a U.S. collaboration to develop scrf high gradient technology in coordination with the international community."

- The international high energy physics community is relying on Fermilab to take the lead in SRF R&D for the North American region.

- Following the ITRP recommendation the first imperative is establishment of US-based capability in the fabrication of high gradient superconducting accelerating structures.

  – Expanding upon existing scrf expertise at: Argonne, Cornell, Fermilab Jefferson Lab, MSU

  – Provisional goal is to have three U.S. and one European 1.3 GHz ILC cryomodules under test, with beam, by the end of 2009.

  – Build Front end and $\beta < 1$ part for the Proton Driver.

$\Rightarrow$ **Fermilab is committed to providing the US leadership with close coordination with the ILC-Americas collaboration.**

- Fermilab point of view: SMTF is the primary mechanism for providing this leadership while allowing us to simultaneously integrate our ILC and PD R&D activities.

Jlab - Cryomodule Assembly and Test Areas

Cryomodule Test Facility (CMTF)

Cornell
Cavity
Test Pits

Engineering and designing

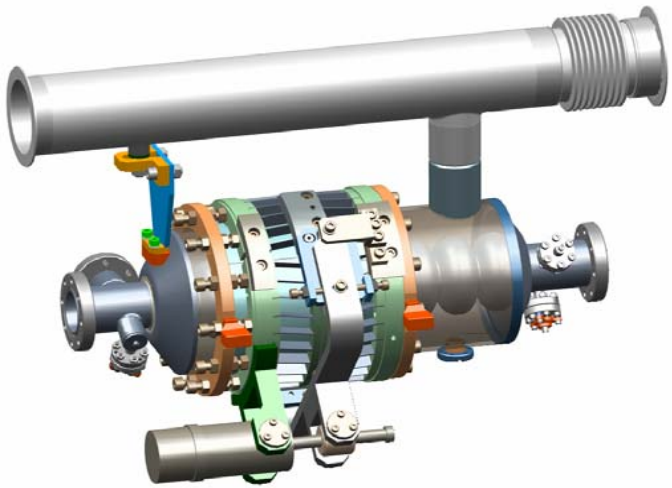

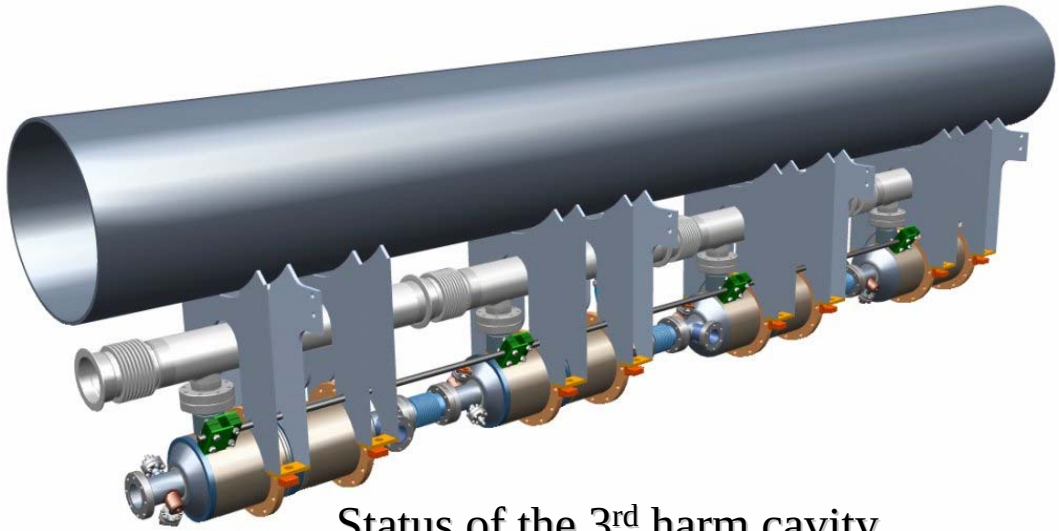

<u>Status of the 3rd harm cavity</u>

- Cavity design is finished
- <u>Built and tested two 9-cell copper models</u>
- <u>Built and tested one 3-cell Nb cavity</u>
- First 9-cell cavity in production (by the end 2004)
- Helium vessel in production (end 2004)
- Blade-tuner in production (end 2004)
- Main coupler under design
- Cryostat for 4 cavities under design
- A0 horizontal cryomodule for single CKM/ 3rd harm. cavities under design

Cold Test of the 3-cell 3.9 GHz cavity in the Vertical Dewar

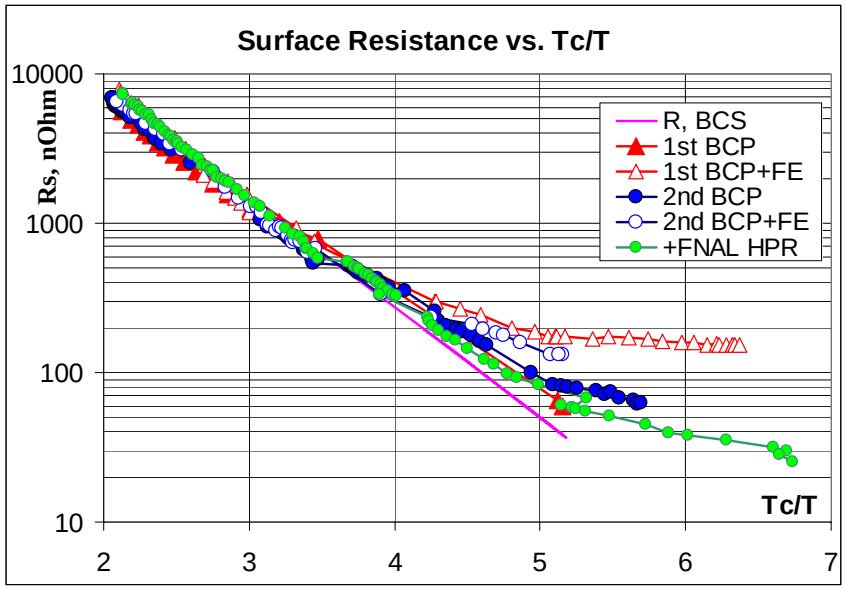

Q

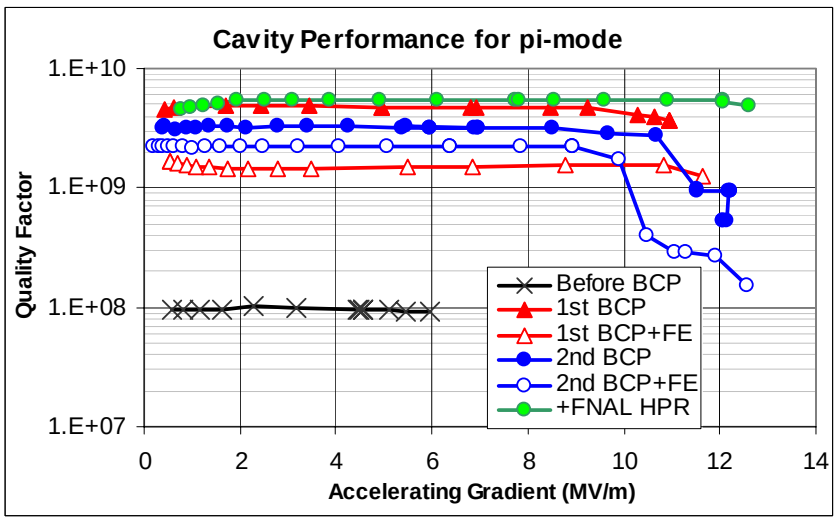

Gradient Mv/m

Test history

#1 – No BCP

#2-5 - After100 μm BCP, HT, HPR(15') -JLAB

#6,7 – Additional 20 μm BCP, HPR(30')-JLAB

Meson Area Fermilab

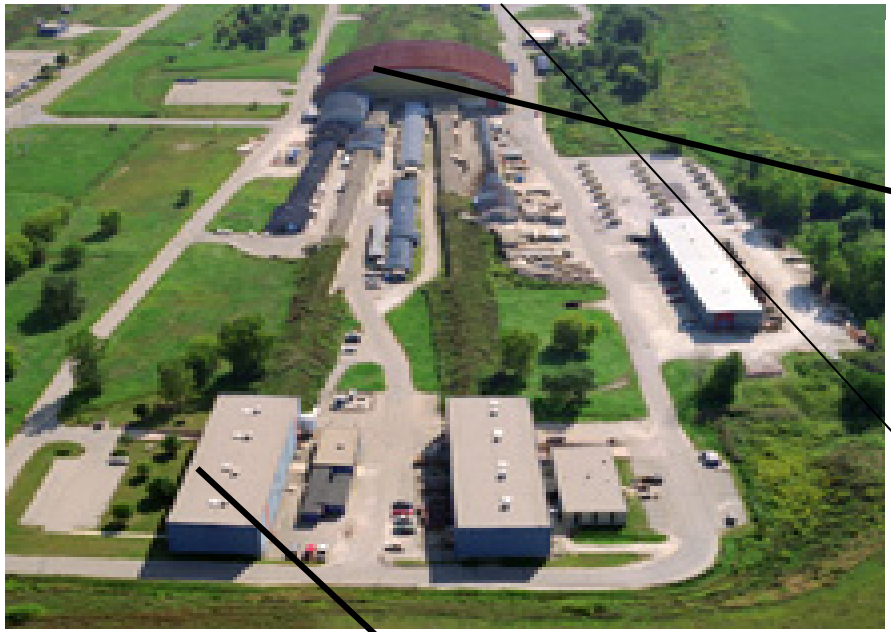

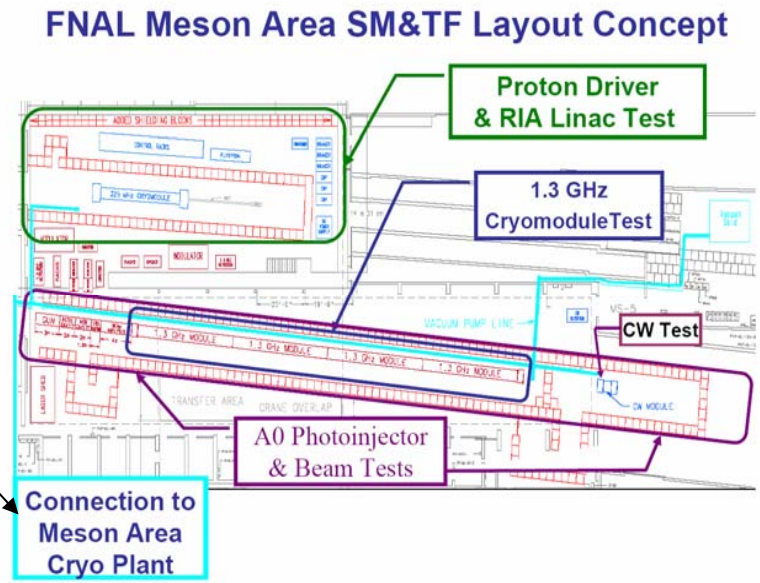

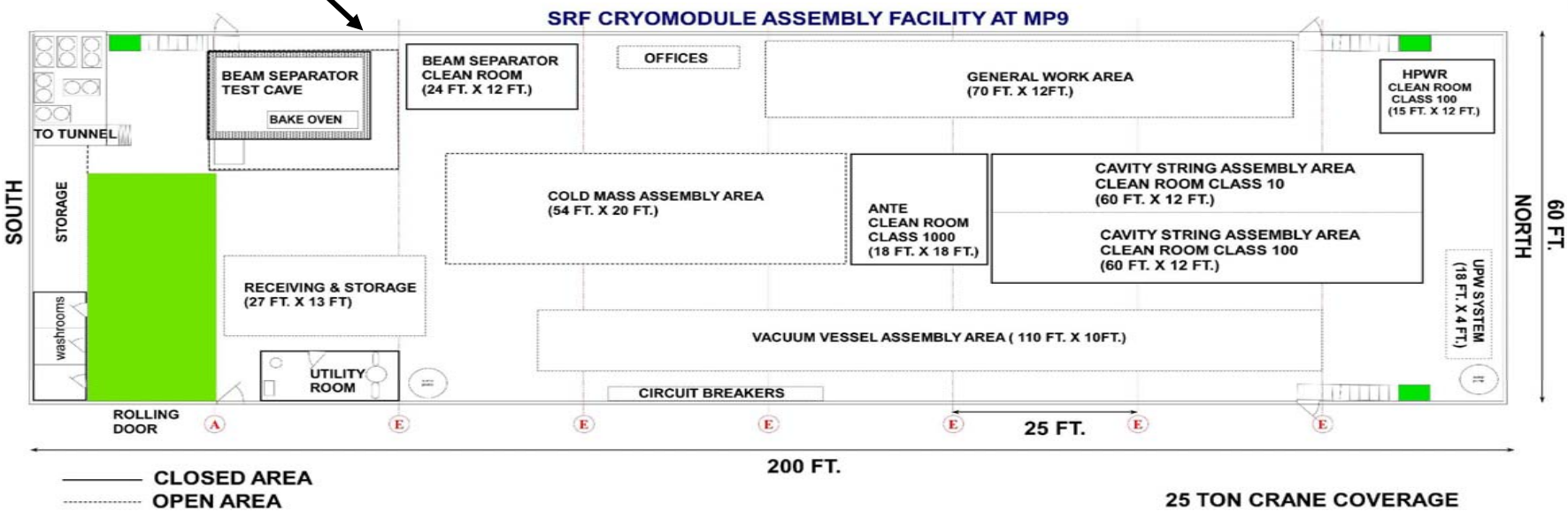

International Linear Collider

- Establish a high gradient, 1.3 GHz cryomodule test area at Fermilab with a high quality pulsed electron beam using an upgraded A0 photo-injector. The upgraded photo-injector is also an R&D prototype for development of an ILC injector.

- Establish a prototype factory with infrastructure for the assembly of cryomodules using cavities produced at collaborating institutions and industries.

- Fabricate 1.3 GHz high gradient cryomodules in collaboration with laboratories, universities and U.S. industrial partners. Test cryomodules and other RF components as fabrication and operational experience is acquired and designs are optimized.

- Demonstrate 1.3 GHz cavity operation at 35 MV/m with beam currents up to 10 mA at a ½ % duty factor. Higher currents or duty factors may be explored if the need arises, but are beyond the present scope of the proposal.

- Develop the capability to reliably fabricate high gradient and high-Q SCRF cavities in U.S. industry.

Phases of 1.3 GHz Test Facility

Phase 1 (FY06-08)

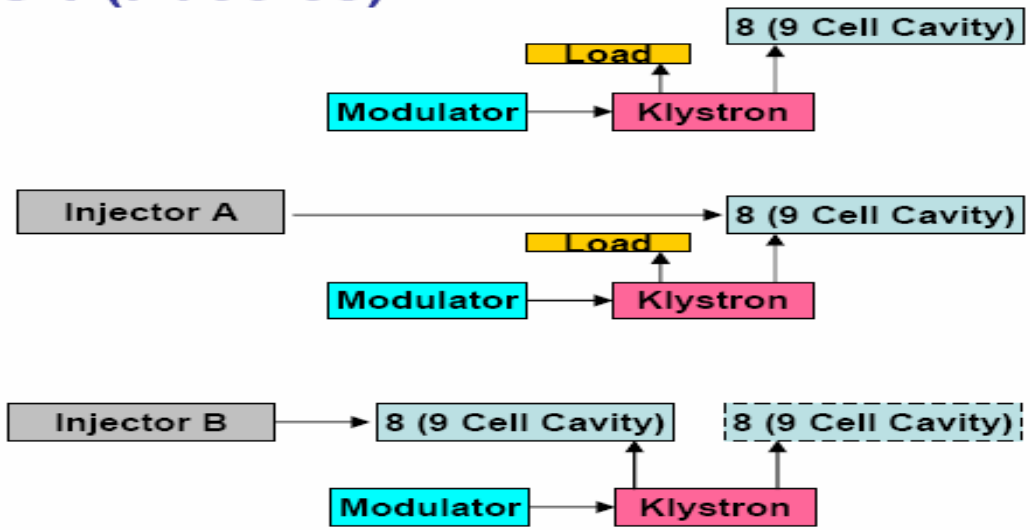

Phase 2 (08-09)

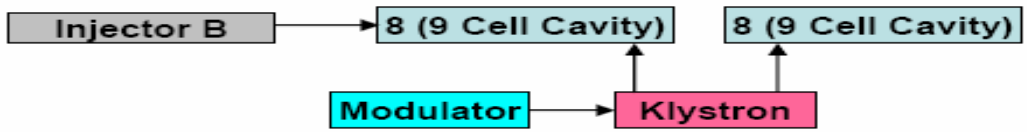

Phase 3 (FY09-...)

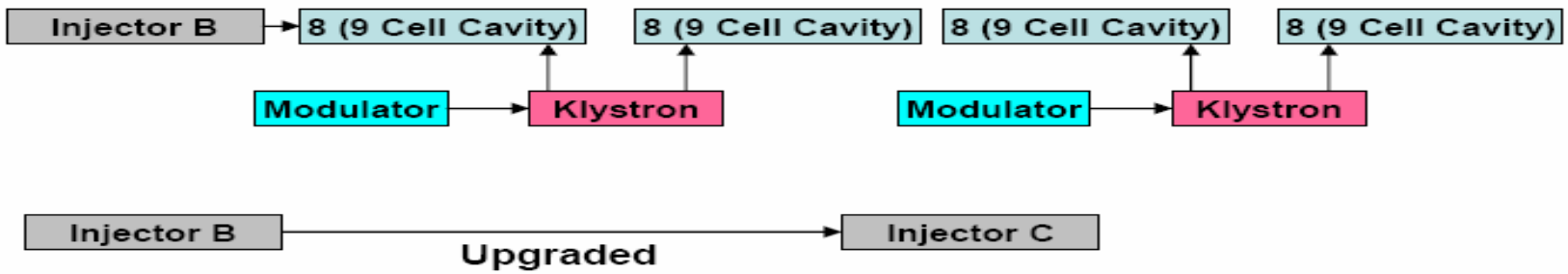

Proton Driver (PD) Low Beta ($\beta < 1$) Cavity Program

- Fabricate test structures and cryomodules for Proton Driver applications.
- Establish an area for high power, 325 MHz, rf testing of b < 1 accelerator structures in pulsed mode (~1% duty factor).
- Demonstrate for Proton Driver, operation at 27MV/m with beam currents up to 8 mA at ¾ % duty factor. Higher currents or duty factors may be explored if the need arises, but are beyond the present scope considered in this proposal.
- The Proton Driver also uses β=1, 1.3 GHz cavities cryomodules that would be nearly identical those for the ILC. There would be an significant overlap in ILC and PD R&D activities in this area.

Proton Driver - 0.5 MW with TESLA Frequencies & SCRF F.E.

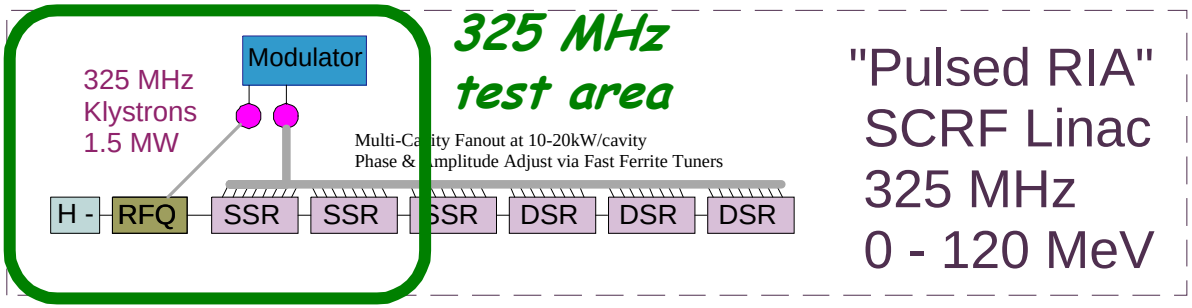

8 GeV 0.5 MW LINAC

- 12 Klystrons (2 types)
- 11 Modulators 20 MW ea.
- 1 Warm Linac Load
- 54 Cryomodules
- ~550 Superconducting Cavities

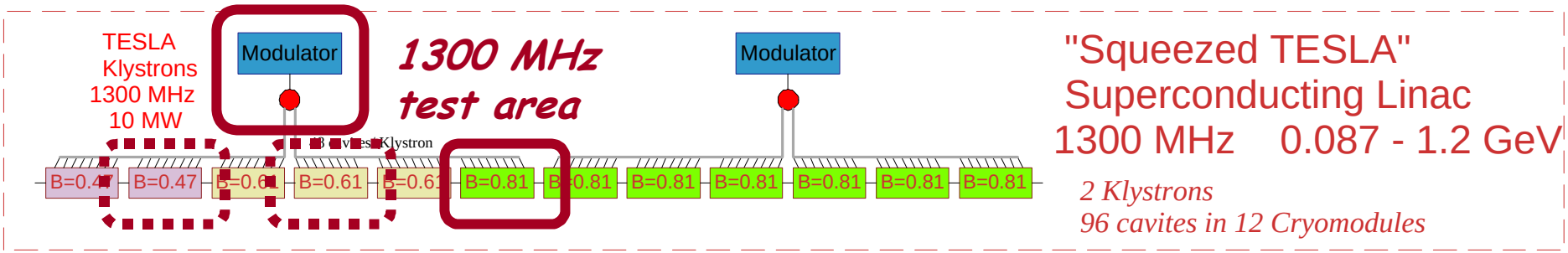

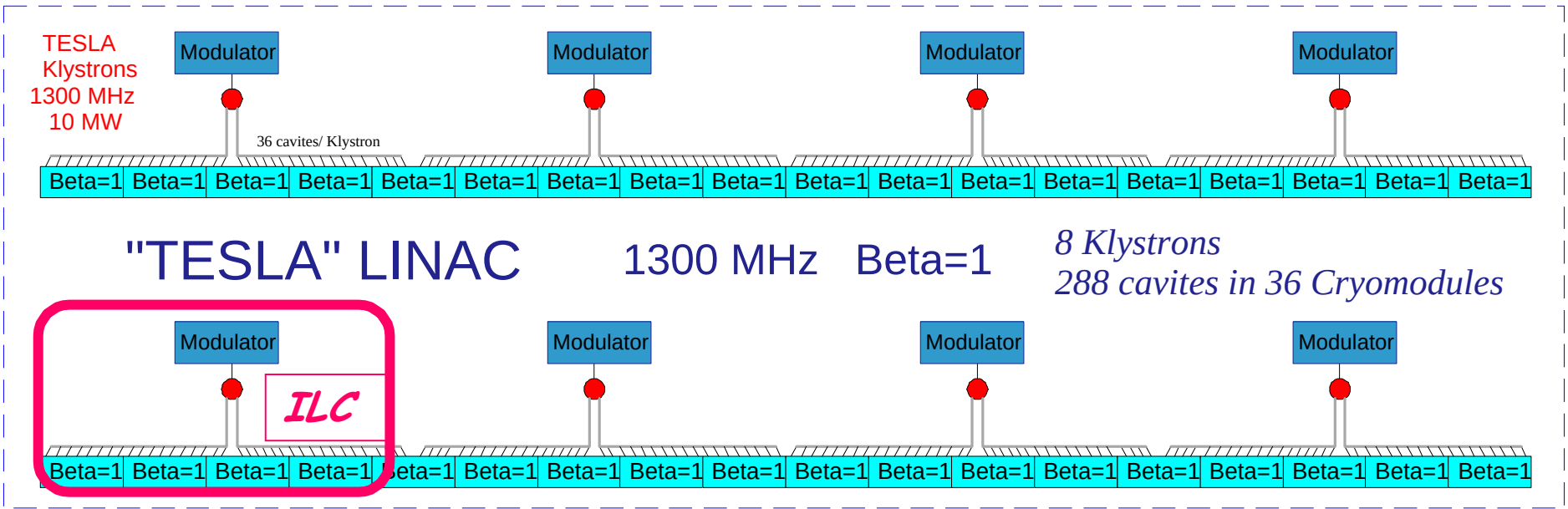

325 MHz Front-End Linac

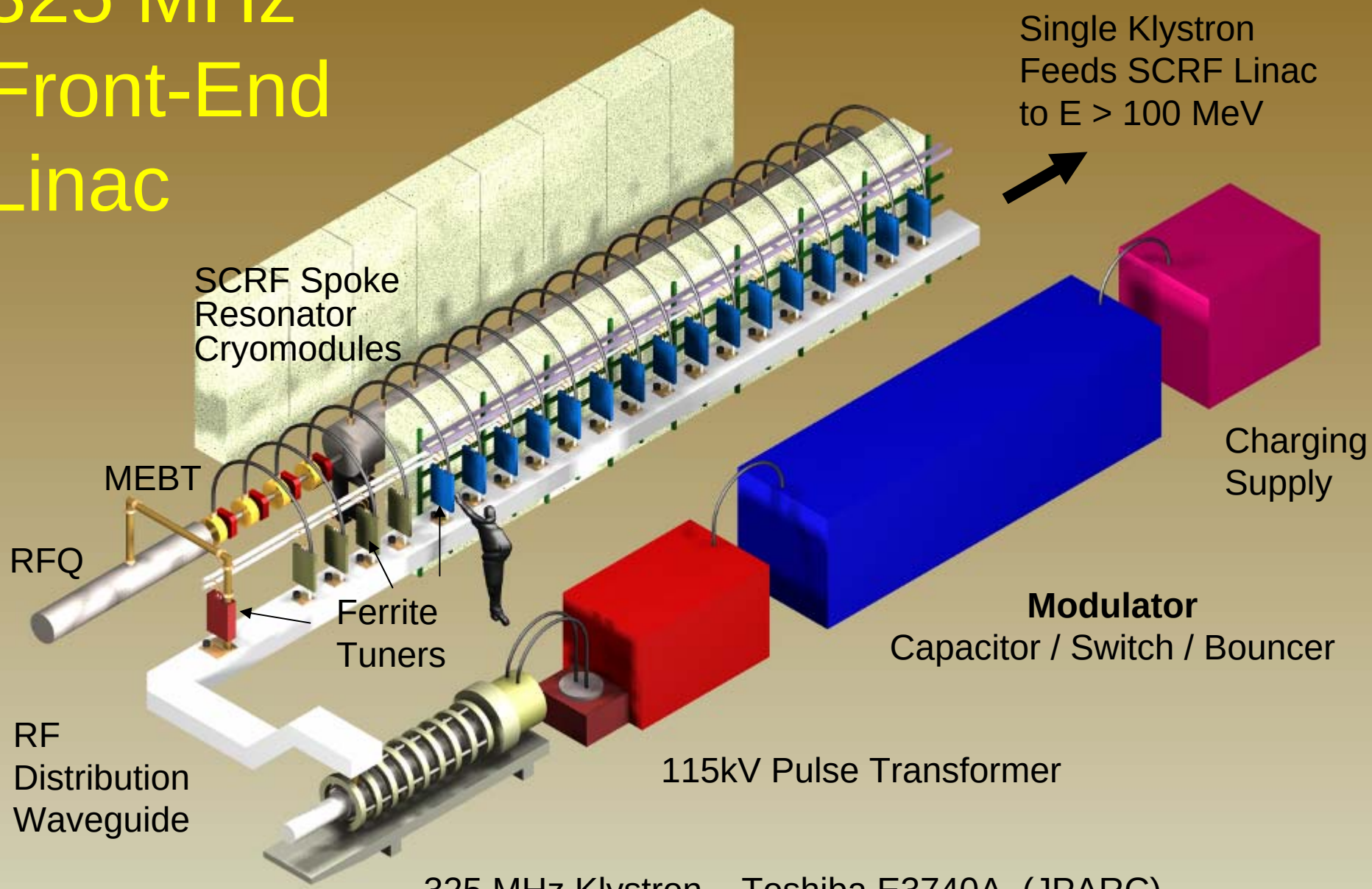

CW Area

- Fabricate the highest attainable Q-value cryomodules with emphasis on accelerator and deflecting cavities.

- Establish a test area with pulsed beam availability that will extend the reach of the present U.S. program in CW capabilities. This area will make use of the b=1 pulsed test beam. Possible low current CW beams may be considered in the future (high current CW beams are available elsewhere).

- Demonstrate 20 MV/m CW cavity operation with Q values of ~ $3x10^{10}$ for light source applications, with associated rf control at high level of precision.

Rare Isotope Accelerator (RIA)

- Clean and cold-test individual cavities after chemical processing.
- Clean and assemble cavities into cavity strings, forming a sealed unit including RF couplers, beam line valves, and vacuum manifold and valves.
- Assemble cryomodules incorporating the cavity strings.
- Cold test and high power test assembled cryomodules.

Summary

- A new U.S. initiative to establish a superconducting radio-frequency (SRF) accelerator facility at Fermilab
  - SMTF would provide the primary development and testing forum for major SRF-based projects in high energy physics
    - International Linear Collider
    - Fermilab Proton Driver,
    - Complement the existing and planned SRF facilities at other laboratories for nuclear physics and materials and life sciences.

- SMTF (Fermilab), TTF (DESY) and STF (KEK) are collaborating on these R&D.