Holometer Control System

Fermilab E990 at MP7 and MP8

Lee McCuller

July 1, 2013

Overview

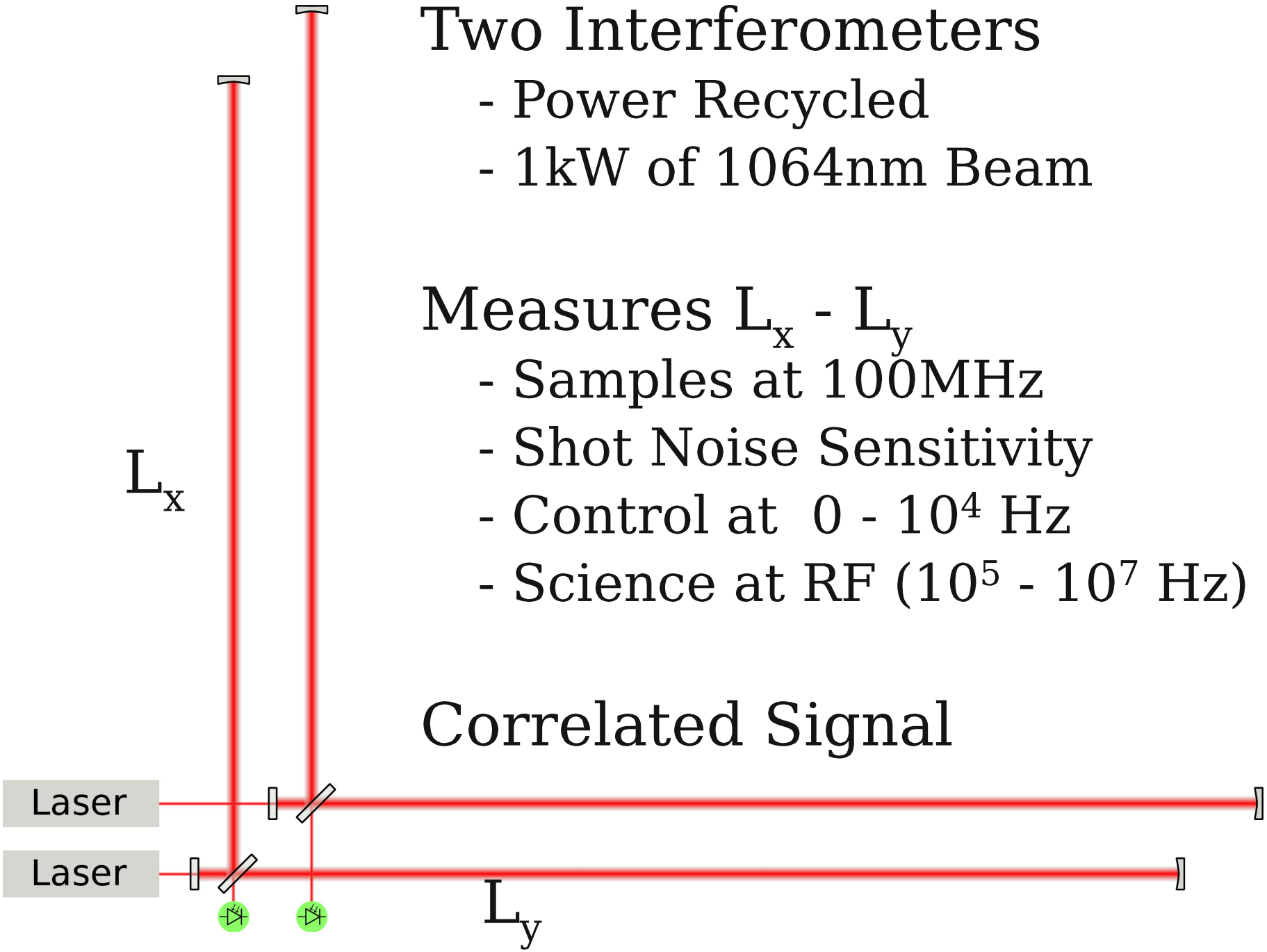

Two Interferometers

- Power Recycled
- 1kW of 1064nm Beam

Measures L_x - L_y

- Samples at 100MHz
- Shot Noise Sensitivity
- Control at 0 - 10^4 Hz
- Science at RF (10^5 - 10^7 Hz)

Correlated Signal

Seismic Noise

as measured by Differential Arm Length (across 40m)

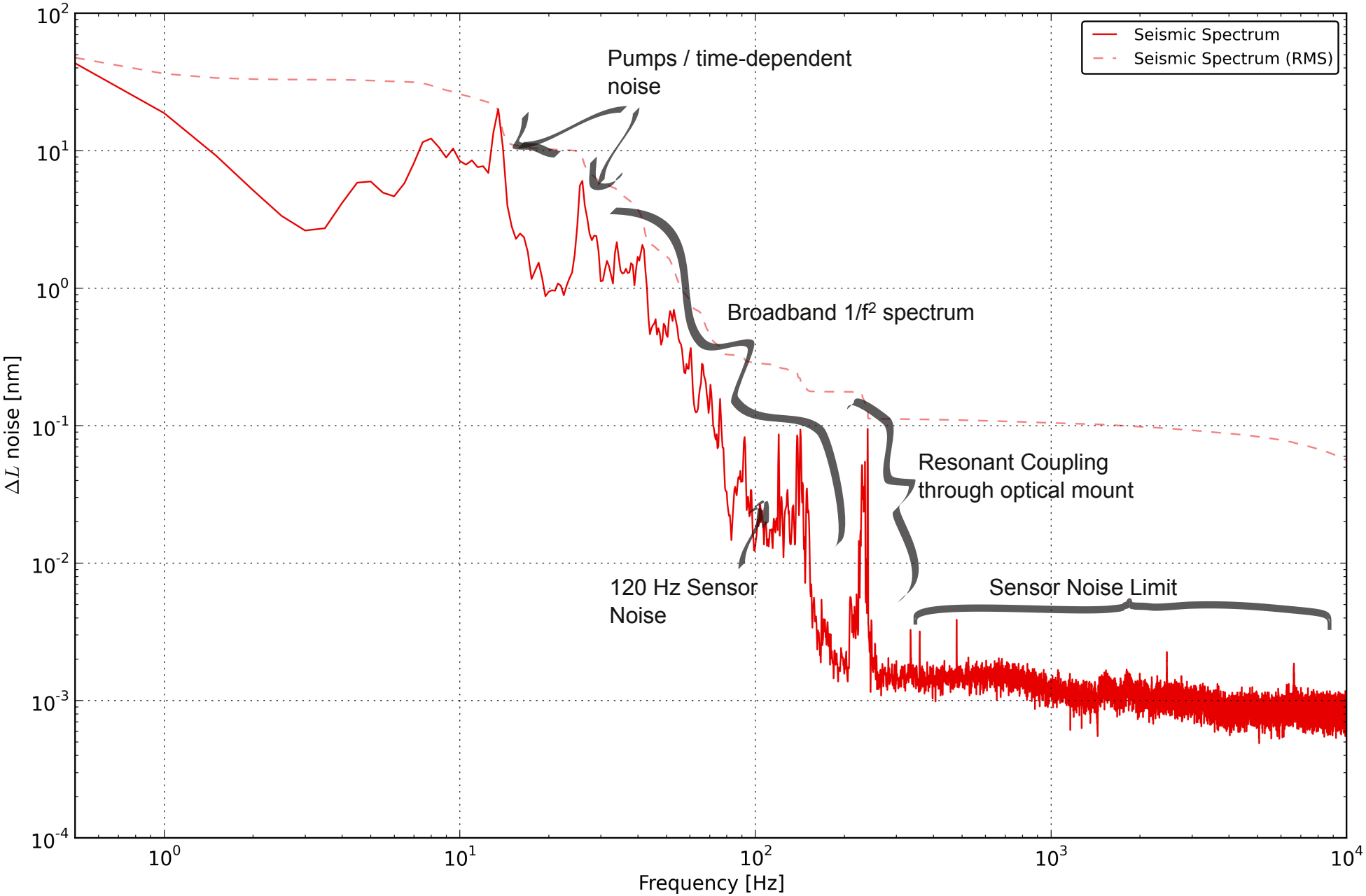

Controller Requirements

Nonlinear signals
- need dividers
- need modulators

6 Degrees of Freedom

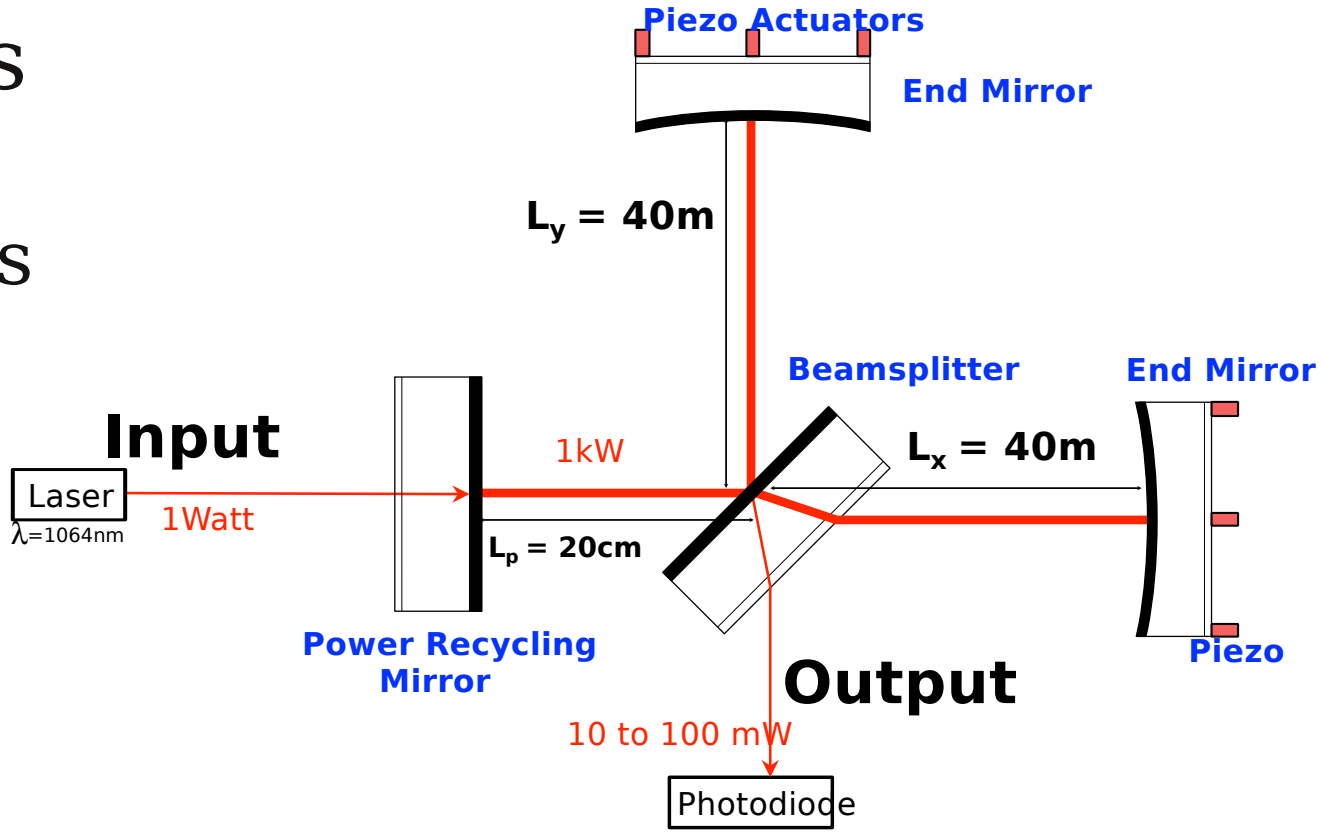

basis changes (MIMO controller)

Photodiode Sensing
↓
Cavity Control Basis
↓
Piezo Physical Basis

Optics

Destructive Interference fringe sets noise requirement:

$$1\text{kW} \cdot \sin^2(\mathbf{2nm} \cdot \frac{2\pi}{1064\text{nm}}) = \mathbf{140mW}$$

FPGA Implementation

Labview FPGA

- 8 analog in, 8 analog out
- 16-bit
- FNAL implemented front-end
- 100MHz pipeline

Microcode Architechture

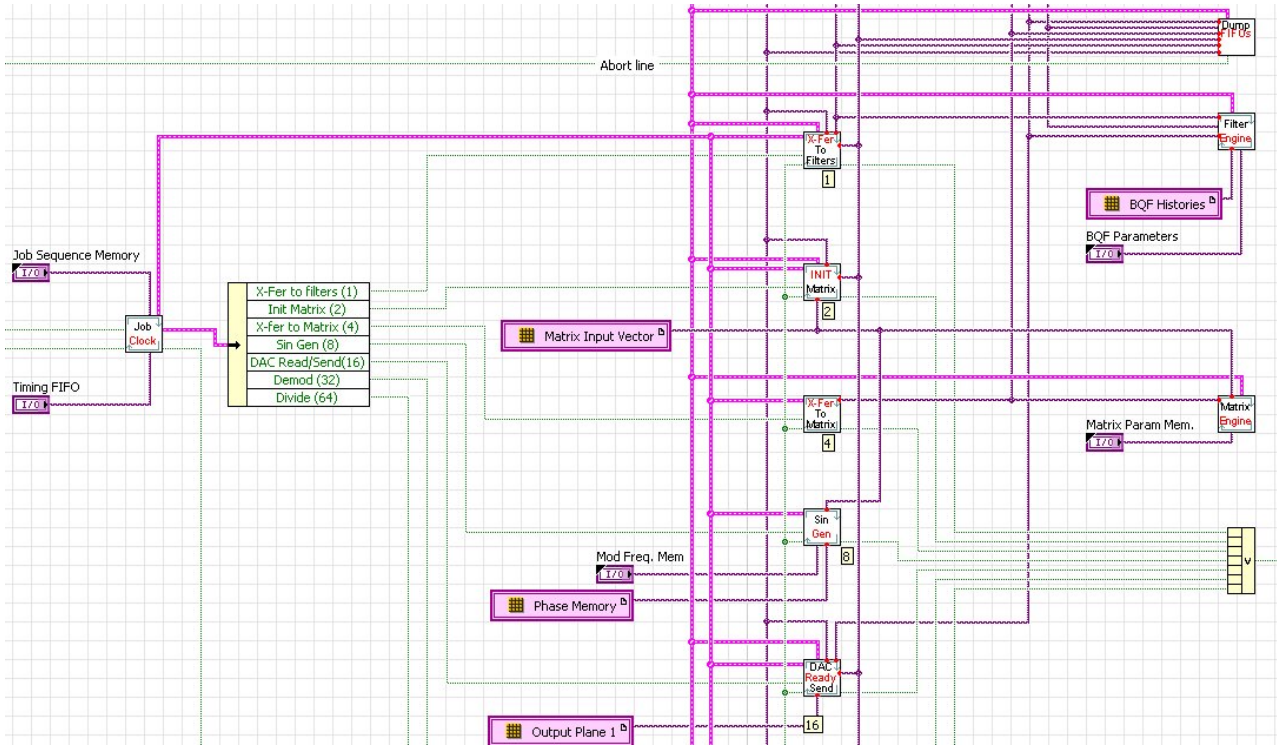

4 Basis Changes

- sensor
- control
- pzt x,y,z
- pzt physical

32kHz sampling

Digital Bi-Quadratic Filters

- 1400 Running
- 2 Poles, 2 Zeros
- cascaded

Interface

Control Interface

- modelled after LIGO
- EPICS (like ACNET)
- Scriptable

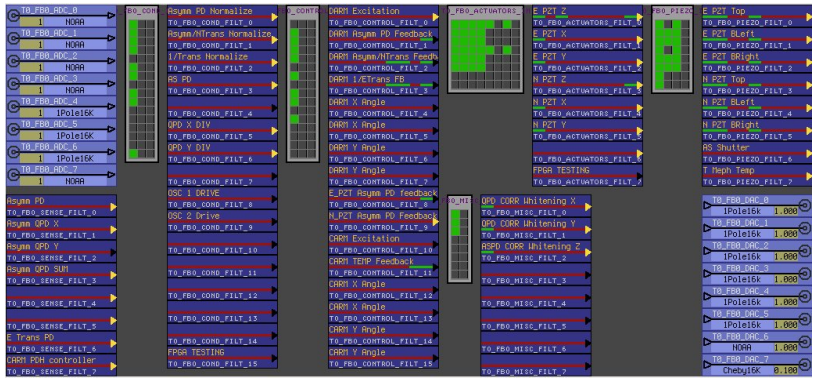

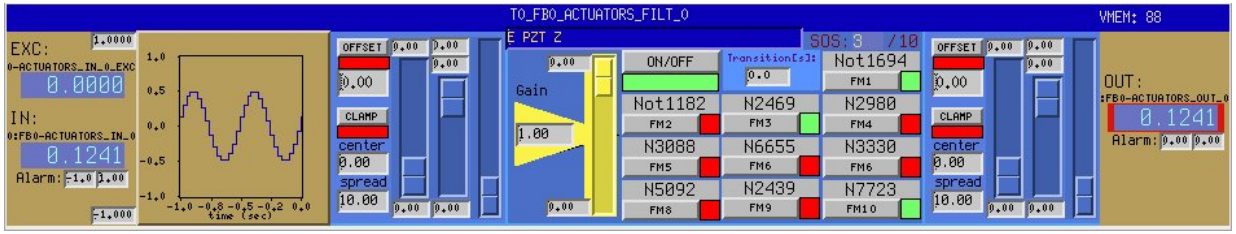

Data interface

- Interfaces LIGO, EPICS
- ~200 channels
- Server/Client
- Waveform generators
- Transfer functions

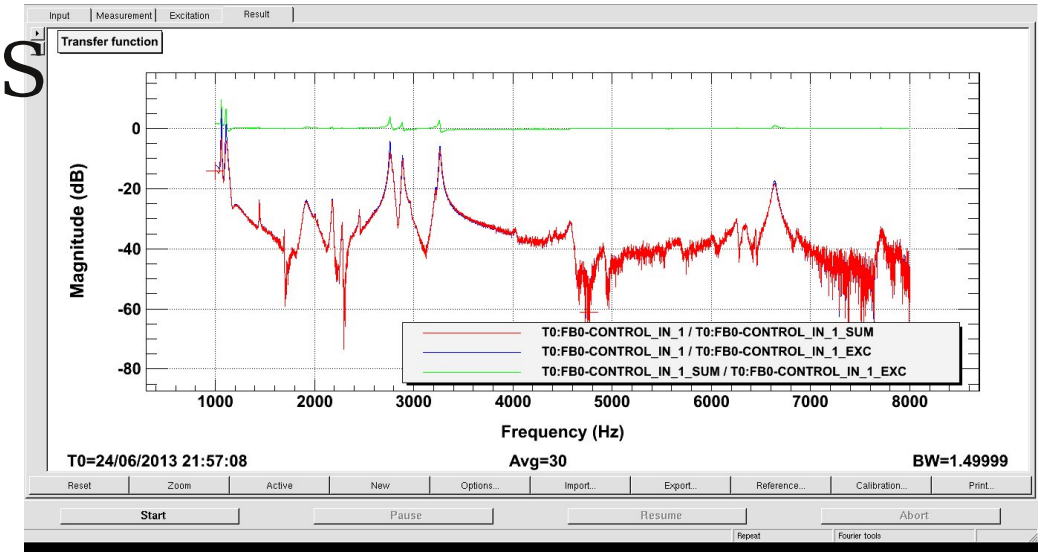

Active Seismic Compensation

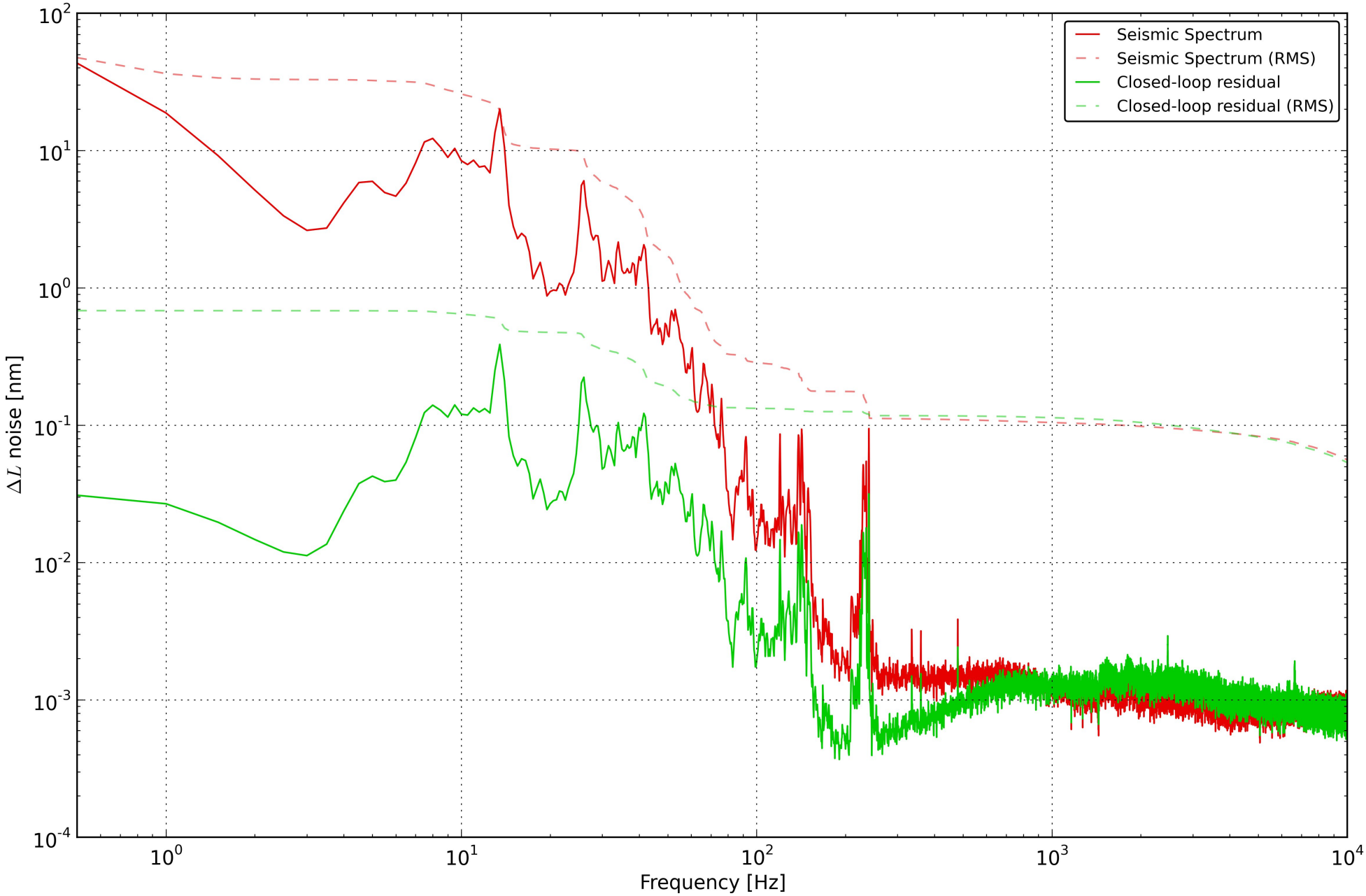

Conditional Shaping Filters

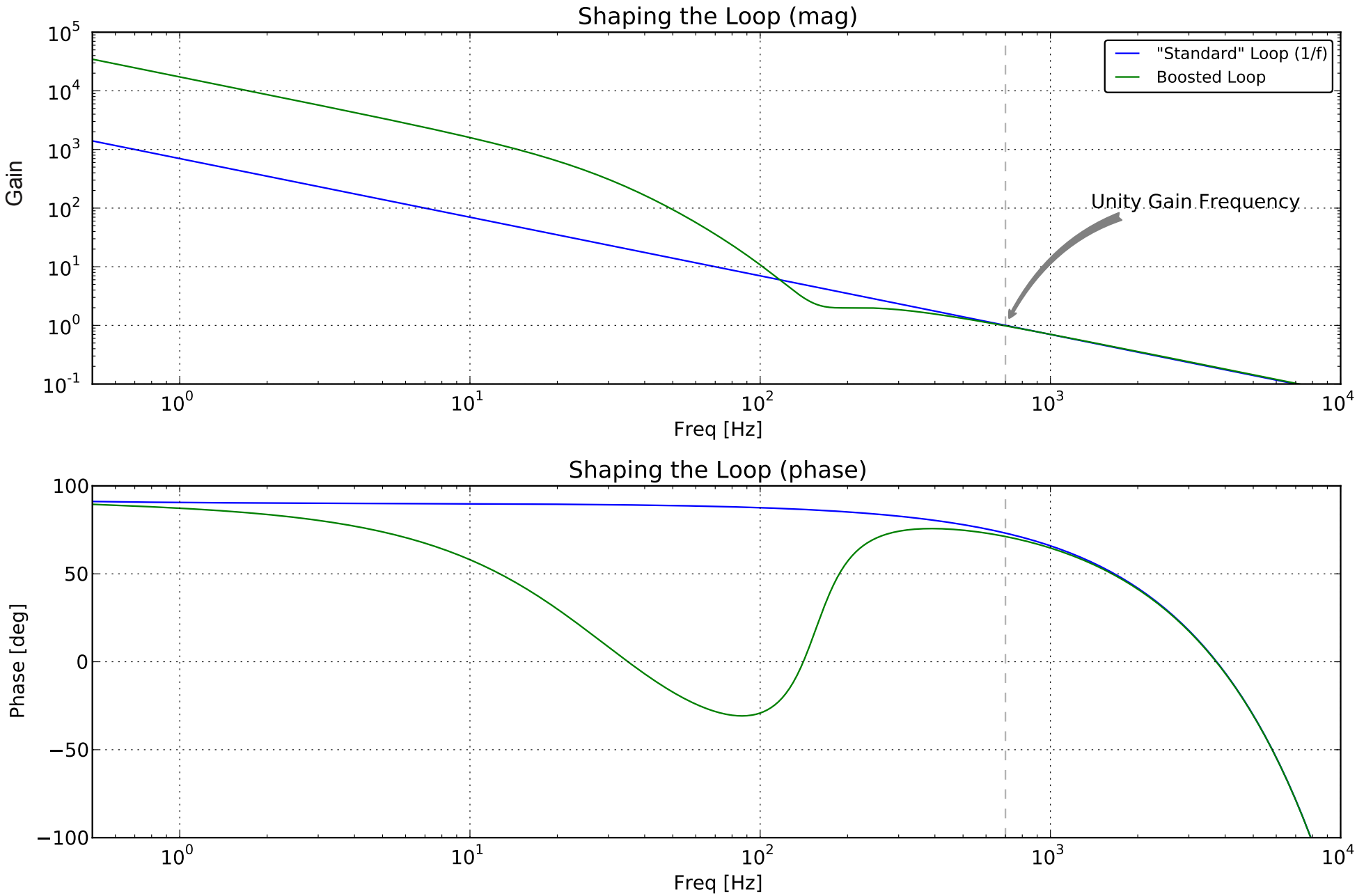

Boosted Noise Suppression

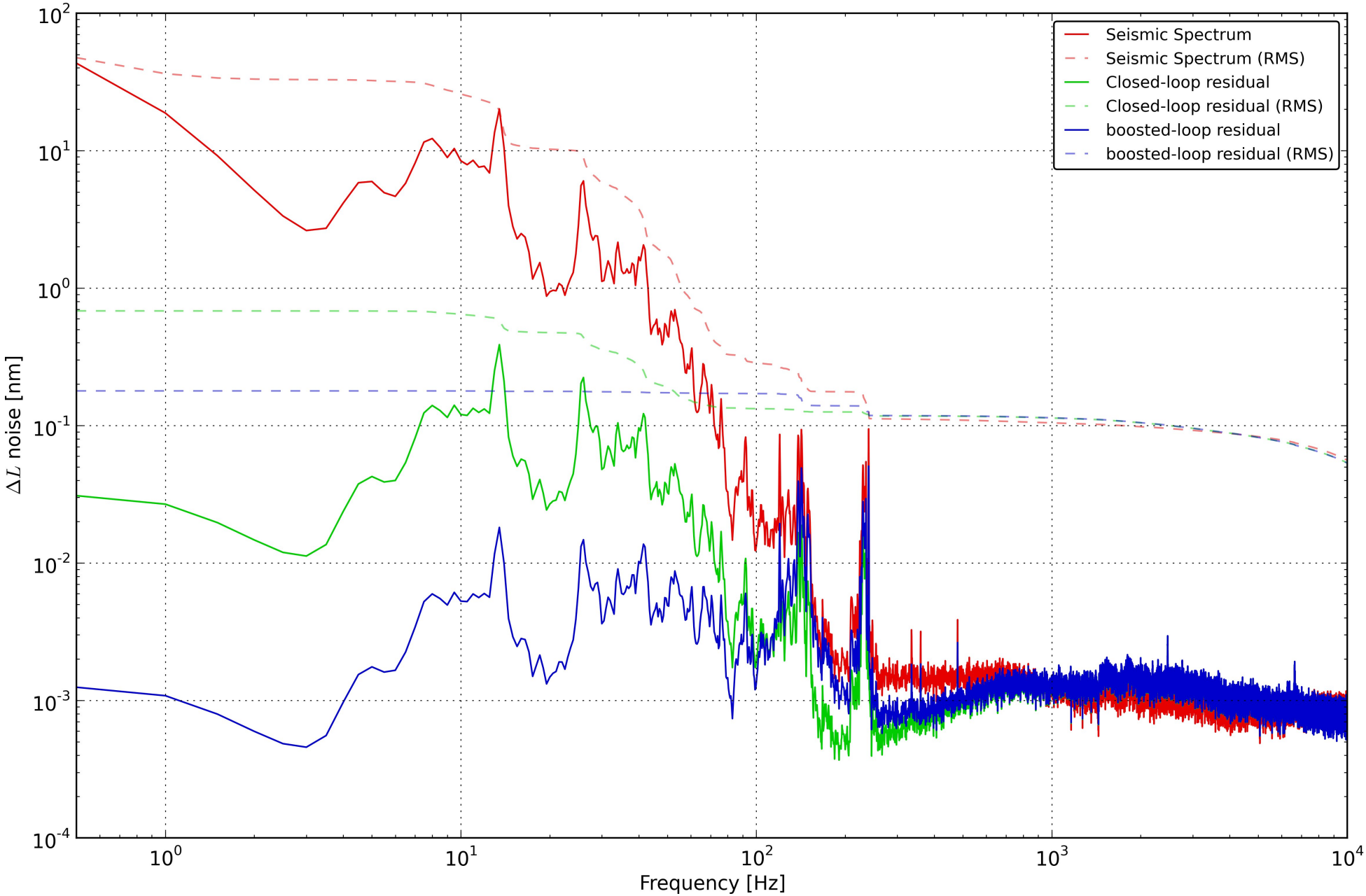

Status

Current:

- 2 Operating interferometers
- 1/10 full power
- Automated Locking
- Exploring Correlated RF Background

Upcoming:

- Install best optics
- Full power operation (difficult!)
- Calibrations (merging slow and fast data)

Further Seismic Isolation

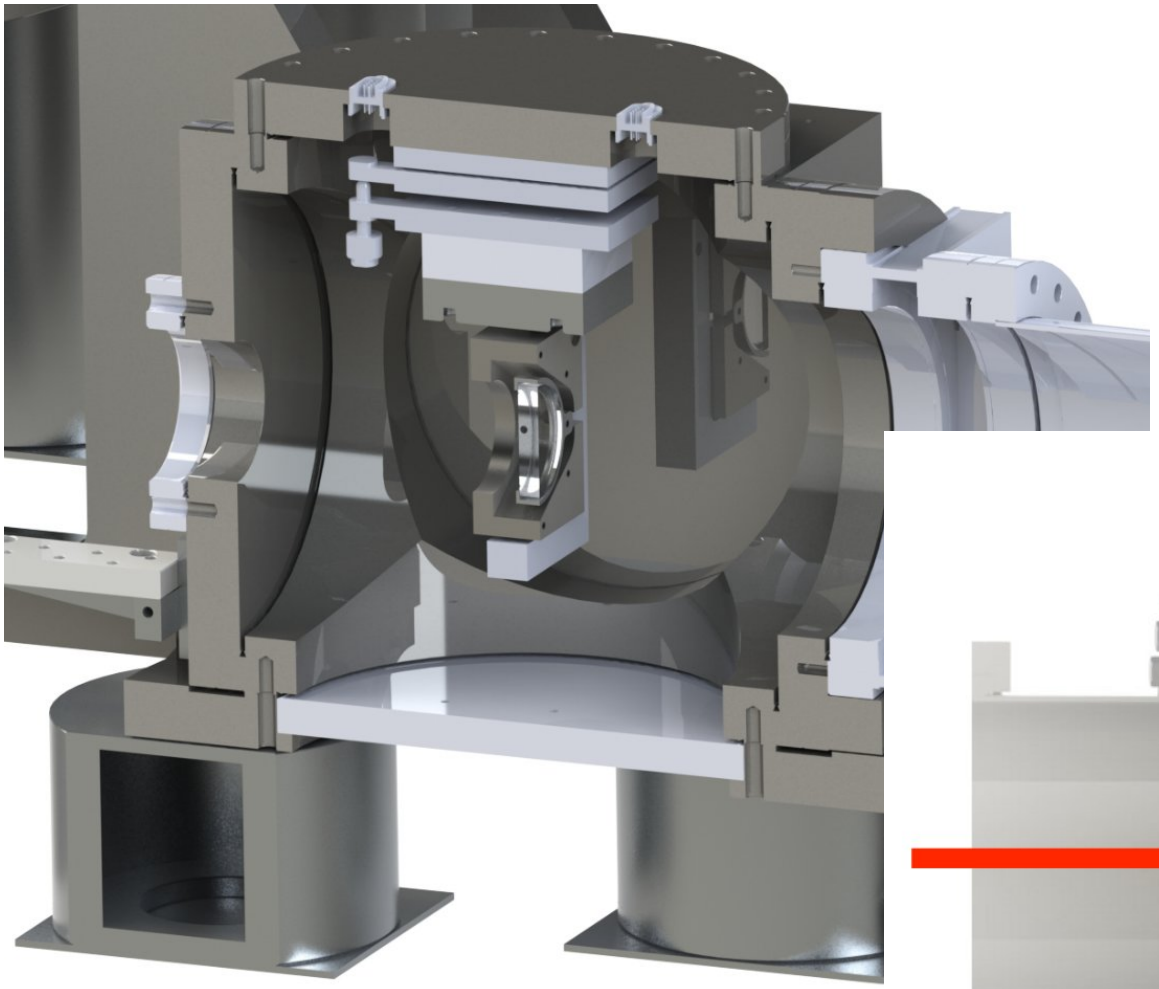

Upgrade

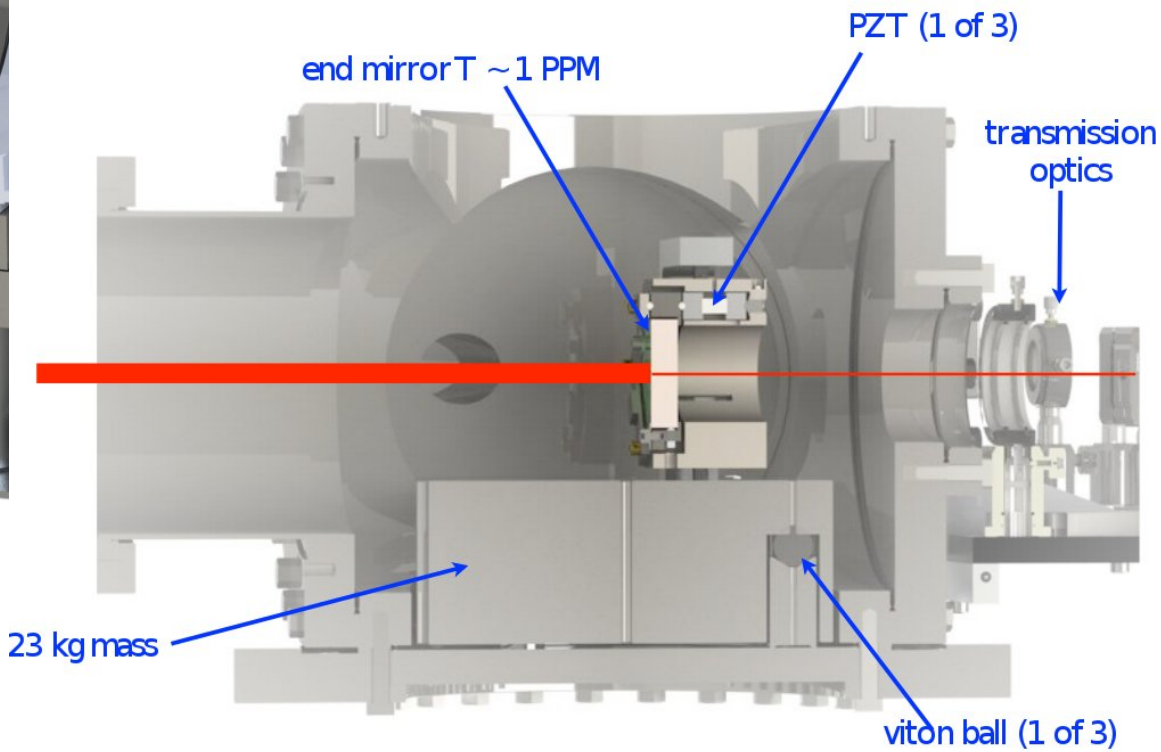

Operating Point Shape

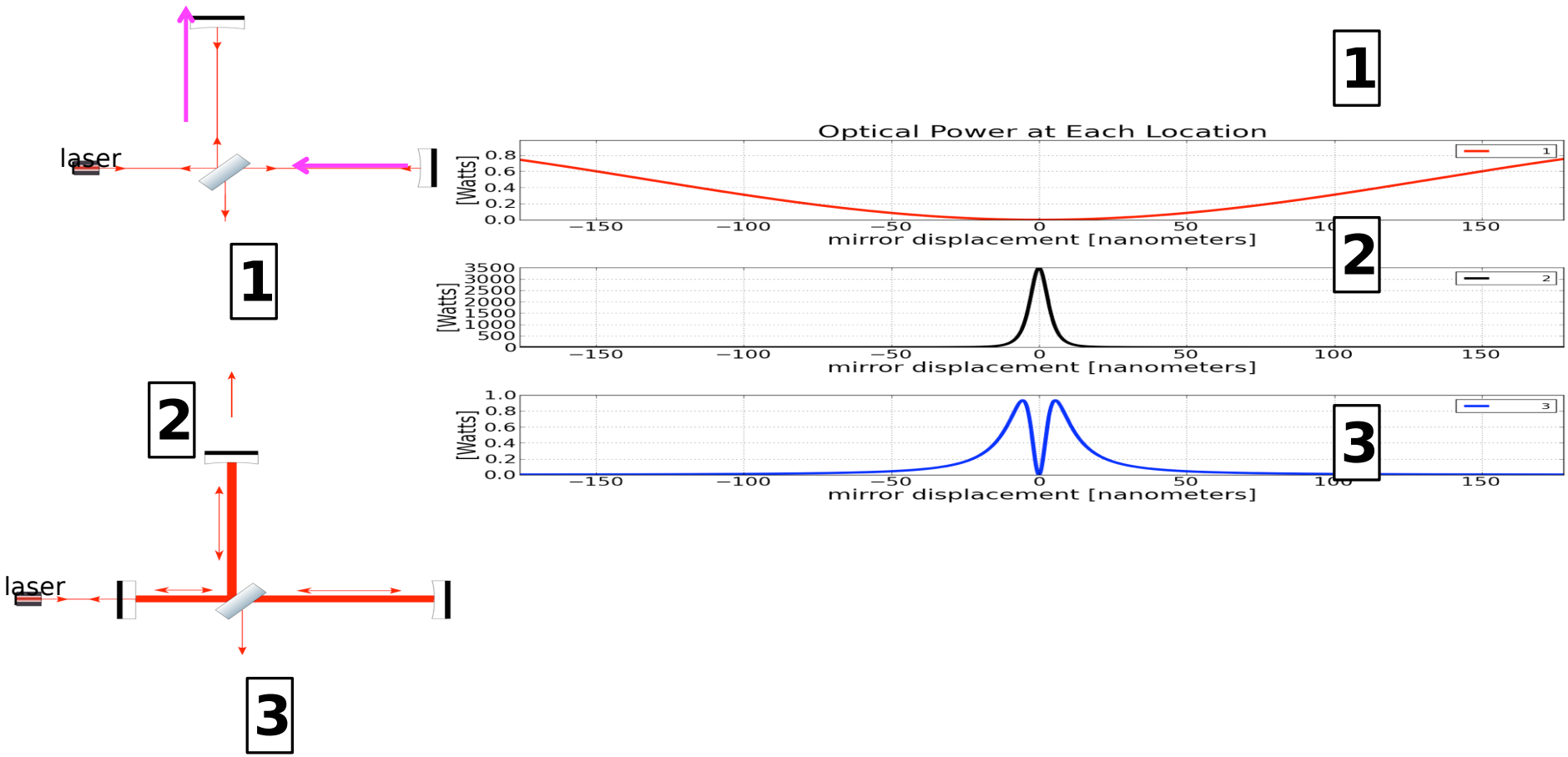

Digital Biquadratic Filters
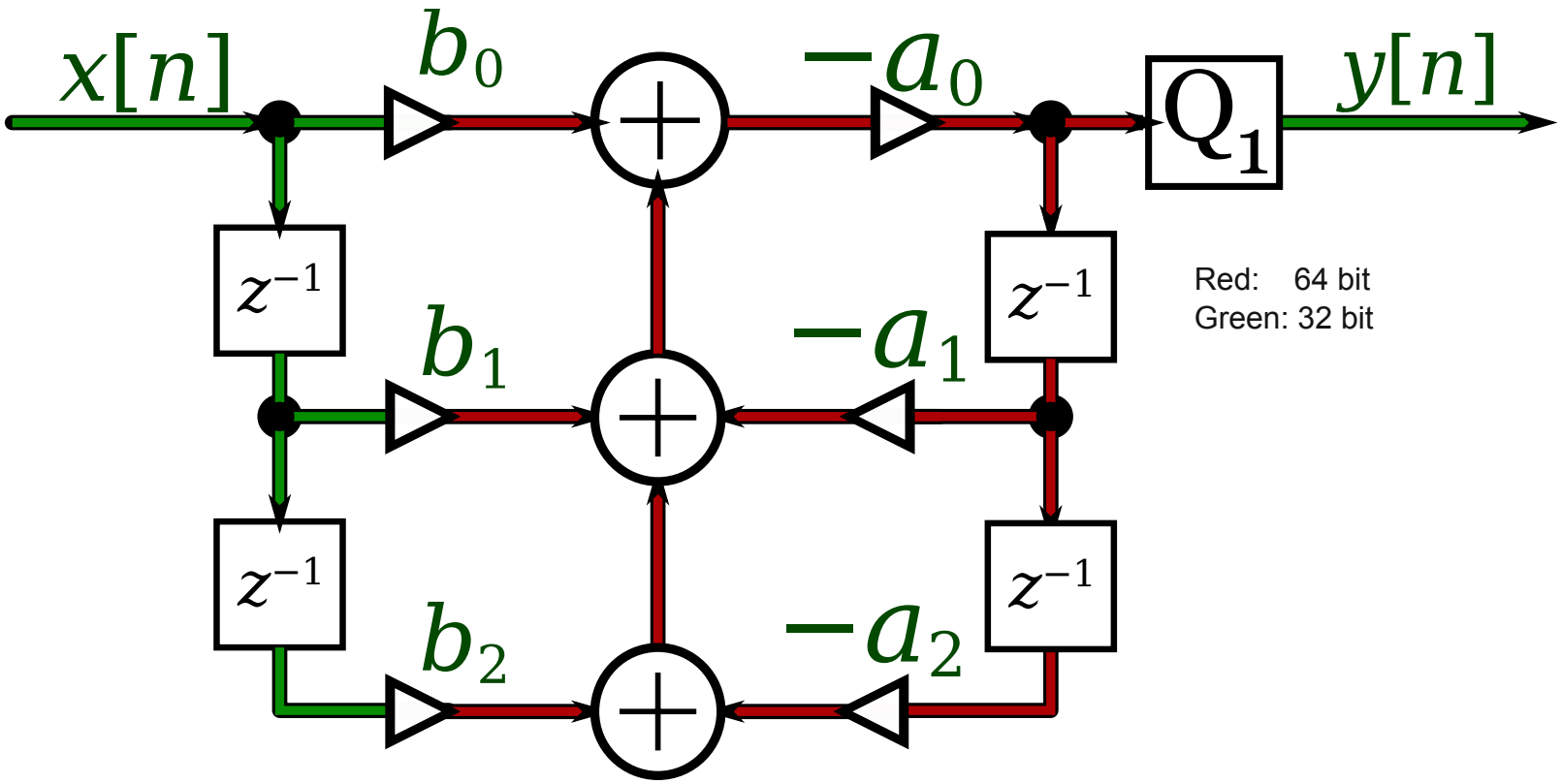
$$y[n] = \frac{b_0+b_1z^{-1}+b_2z^{-2}}{a_0+a_1z^{-1}+a_2z^{-2}}x[n]$$