Expression of Interest

Search for Neutron-Antineutron Transformation at Fermilab

The NNbarX Collaboration

K. Ganezer, B. Hartfiel, J. Hill
California State University, Dominguez Hills

S. Brice, N. Mokhov, E. Ramberg, A. Soha, R. Tschirhart
Fermi National Accelerator Laboratory

D. Baxter, C-Y. Liu, M. Snow, Z. Tang, R. Van Kooten
Indiana University, Bloomington

A. Roy
Inter University Accelerator Centre, New Delhi, India

W. Korsch
University of Kentucky, Lexington

G. Muhrer, A. Saunders
Los Alamos National Laboratory

H. Shimizu
Nagoya University, Japan

P. Mumm
National Institute of Standards

A. Hawari, R. Pattie, D. G. Phillips II, B. Wehring, A. Young
North Carolina State University, Raleigh

T. W. Burgess, J. A. Crabtree, V. B. Graves, P. Ferguson, F. Gallmeier
Oak Ridge National Laboratory, Spallation Neutron Source

S. Banerjee, S. Bhattacharya, S. Chattopadhyay
Saha Institute of Nuclear Physics, Kolkata, India

D. Lousteau
Scientific Investigation and Development, Knoxville, TN

A. Serebrov
St. Petersburg Nuclear Physics Institute, Russia

M. Bergevin
University of California, Davis

L. Castellanos, C. Coppola, T. Gabriel, G. Greene, T. Handler,
L. Heilbronn, Y. Kamyshkov*, A. Ruggles, S. Spanier, L. Townsend, U. Al-Binni
University of Tennessee, Knoxville

P. Das, A. Ray, A.K. Sikdar
Variable Energy Cyclotron Centre, Kolkata, India

Theory Support Group

K. Babu
Oklahoma State University, Stillwater

Z. Berezhiani
INFN, Gran Sasso National Laboratory and L'Aquila University, Italy

Mu-Chun Chen
University of California, Irvine

R. Cowsik
Washington University, St. Louis

A. Dolgov
University of Ferrara and INFN, Ferrara, Italy.

A. Gal
Hebrew University, Jerusalem, Israel

B. Kerbikov
Institute for Theoretical and Experimental Physics, Moscow, Russia

B. Kopeliovich
Universidad Técnica Federico Santa María, Chile

V. Kopeliovich
Institute for Nuclear Research, Troitsk, Russia

R. Mohapatra

University of Maryland, College Park

L. Okun
Institute for Theoretical and Experimental Physics, Moscow, Russia

C. Quigg
Fermi National Accelerator Laboratory

U. Sarkar
Physical Research Laboratory, Ahmedabad, India

R. Shrock
SUNY, Stony Brook

A. Vainshtein
University of Minnesota, Minneapolis

---

* Contact person kamyshkov@utk.edu, tel 865-974-6777

1. Executive Summary

An observation of neutron-antineutron transformation would constitute a discovery of fundamental importance for cosmology and particle physics. A discovery of this process would prove that all nuclei are ultimately unstable. It would provide the first direct experimental evidence for baryon number (B) violation, which is required to explain the observed baryon asymmetry of the universe according to inflationary cosmology, which sets B to zero in the very early universe. Its discovery would qualitatively change our ideas of the scales relevant for quark-lepton unification and neutrino mass generation. If seen at rates achievable in next-generation searches it must be taken into account for any quantitative understanding of the baryon asymmetry of the universe.

Project X presents a unique path for sensitive searches of neutron-antineutron transformation (n-nbar) with a cold neutron source implemented at 1-MW spallation target. A new high power target facility presents an opportunity to take full advantage of continuing improvements in neutron optics technology which can deliver a much larger number of free neutrons to a distant target with a precisely-identified annihilation vertex. Prospects for an essentially background-free measurement using free neutrons are excellent, and additionally any positive observation can be suppressed experimentally by breaking the near degeneracy of the neutron and antineutron states by applying a small magnetic field. The same slow neutrons needed for a sensitive free neutron-antineutron transformation search are also of potential interest to next-generation searches for the neutron electric dipole moment (n-EDM) and possibly for other experiments. Existing slow neutron sources at research reactors and spallation sources possess neither the required space nor the access to the cold source needed to take full advantage of advanced neutron optics technology which enables a greatly-improved free neutron-antineutron transformation search experiment. The physics and theoretical importance of neutron-antineutron transformation search and the experimental possibilities were recently discussed in [1-3].

This EOI outlines a proposal (a) for development of the pre-conceptual design of the cold neutron spallation target (CNST) for Project X and (b) for "NNbarX", a two-stage experiment for free neutron-antineutron transformation search with a spallation target at Fermilab. Both need to be designed together in order to optimize the sensitivity of the NNbarX experiment. The CNST and the first-stage experiment can be built and start operation during the commissioning of the first-stage of the Project-X, which is based on a 1 GeV and 1 mA Linac. The first-stage of NNbarX can be a horizontal experiment with configuration similar to the previous state-of-the-art experiment performed at ILL/Grenoble in 1990's [4], but employing improvements of the optimized liquid deuterium cold neutron moderator, and of the elliptical super-mirror focusing reflector. Thus, an economically designed first-stage experiment should be capable of improving the sensitivity of an n-nbar search by factor 20-30 beyond the limits obtained in ILL experiment [4], and will also exceed the n-nbar limits obtained in the Super-K intranuclear search [5].The future second stage of NNbarX experiment will implement further significant sensitivity improvement factors: vertical layout and the "4π-reflective cold target" that will allow using colder neutrons and ultra-cold neutrons (UCN) for the n-nbar search. In this configuration NNbarX should be able to boost the sensitivity by another factor of ~ 100 that will correspond to the "oscillation time" parameter of the theory of $\tau_{n\bar{n}} > 10^{10}$ seconds.

2. Physics Motivation for $n \to \bar{n}$ Search

A true understanding of the physics of baryon number violation would require comprehensive knowledge of the underlying symmetry principles, with distinct selection rules corresponding to different complementary scenarios for unification and for the generation of baryon asymmetry of the universe. Thus, discovery of proton decay with the selection rule $\Delta B = 1$ would imply the existence of new physics at an energy scale of 10^{15} GeV, while discovery of $n \to \bar{n}$ oscillation with the selection rule $\Delta B = 2$ would point to new physics near and above the TeV scale. There also exist many models, including those with extra space dimensions at TeV scale, with local or global B or $B-L$ symmetry that do not allow proton decay, and where $n \to \bar{n}$ oscillation (transformation) is the only observable baryon number violating process.

The discovery of neutrino mass provided the first direct evidence for physics beyond the Standard Model. A simple way to understand the small neutrino masses is by the seesaw mechanism, which predicts that the neutrino is a Majorana fermion, i.e., it breaks lepton number L by two units. However, even if the Majorana nature of the neutrino is established through observation of neutrinoless double beta decay, we still need to understand at what scale the dynamics occurs. Since the true anomaly-free symmetry of the Standard Model is the combination $B-L$, if L is broken by two units, it is natural for B to be broken by two units as well. Indeed, quark-lepton unified theories that predict Majorana neutrinos also predict $n \to \bar{n}$ oscillations. The search for $n \to \bar{n}$ oscillations will therefore supplement neutrinoless double beta decay experiments in establishing a common mechanism of these processes. In particular, an observation of $n \to \bar{n}$ oscillation may indicate that the small neutrino mass is not a signal of physics at the GUT scale but rather at the scale not much above a TeV.

Originally it was thought that proton decay predicted by grand unified theories could generate the matter-antimatter asymmetry. However, since sphaleron processes in the Standard Model violate $B + L$ number [6], any $B-L$ conserving GUT-scale-induced baryon asymmetry would be washed out at the electroweak phase transition [7]. The lepton number violating decays of the right-handed neutrino within minimal SO(10)-type GUTs can naturally explain the observed matter-antimatter asymmetry via the process of leptogenesis [8]. Observation of $n \to \bar{n}$ oscillations at currently achievable sensitivity would, however, hint at a new mechanism for the generation of matter-antimatter asymmetry, since the baryon excess generated by leptogenesis would be washed away [7]. It has been shown that the same physics that leads to $n \to \bar{n}$ oscillation also provides a mechanism for baryogenesis at scales below the electroweak phase transition. Existing theories describing such processes typically also predict colored scalars within the reach of the LHC, along with an observable electric dipole moment of the neutron and some rare B-meson decay channels [9].

The probability of $n \to \bar{n}$ transformation in vacuum in the absence of a magnetic field is $P \cong (t/\tau)^2$, where t is the free neutron propagation time in vacuum and τ is a characteristic oscillation time determined by new physics processes that induce $\Delta B = 2$ transformations. If the effective scale of the relevant new physics is around (10^4 – 10^6) GeV, as predicted by various theoretical models, the possible range of $n \to \bar{n}$ oscillation time is $\tau \sim (10^9 - 10^{11})$ seconds. See paper [10] for a review and for more detailed discussion of $n \to \bar{n}$ oscillation.

3. Previous and New $n \rightarrow \bar{n}$ Searches

Transformation of neutrons to antineutrons with neutrons bound inside nuclei has been sought in large underground proton decay and neutrino detectors: inside iron by the Soudan-2 experiment, inside deuterium by the SNO experiment, and most recently inside oxygen by the Super-Kamiokande experiment [5]. Compared to free neutron transformation in vacuum, the intranuclear $n \rightarrow \bar{n}$ transformation is strongly suppressed by the difference of nuclear potential for neutrons and antineutrons. This suppression was calculated by quantum mechanical nuclear theoretical models [11, 12].

An antineutron transformed from the neutron inside the nucleus is expected to annihilate quickly with one of the surrounding nucleons and to produce multiple secondary hadrons, mainly pions that will be available for detection. Experimentally the search for $n \rightarrow \bar{n}$ transformation in all the above-mentioned experiments is limited by atmospheric neutrino backgrounds. The best result so far was obtained in the Super-Kamiokande 50-kt water Cherenkov experiment [5], where 24 $n \rightarrow \bar{n}$ candidate events were observed for 1489 exposure days with an estimated atmospheric neutrino background of 24.1 events. Based on this observation, the lower limit on the lifetime for neutrons bound in ^{16}O was calculated to be 1.89×10^{32} years at the 90% CL [5].

The lifetime limit for bound nucleons (T) in ^{16}O nucleus can be converted to the $n \rightarrow \bar{n}$ oscillation time for a free neutron (τ) using the relationship: $T(\text{intranuclear}) = R \cdot \tau^2(\text{free})$, where R is the nuclear suppression factor [2, 10–12]. Thus, the corresponding limit for the oscillation time of free neutrons from the Super-K limit can be calculated as 2.44×10^8 s using $R = 1.0\times10^{23}\text{s}^{-1}$ from [11]. For a more recent theoretical model [12] where $R = 0.52\times10^{23}\text{s}^{-1}$, one can find a limit for the free neutron oscillation time as 3.38×10^8 s.

An alternative approach to the search for $n \rightarrow \bar{n}$ oscillations is with free neutrons. This possesses excellent background rejection, also allowing the possibility of turning off the signal using a small magnetic field, and therefore has enormous potential in exploring the stability of matter. Thus, for example, a limit on the free-neutron oscillation time $\tau > 10^{10}$ s would correspond to the limit on matter stability of $T_A = 1.6–3.1\times10^{35}$ years [11, 12].

The previous experimental search for free $n \rightarrow \bar{n}$ using a cold neutron beam with the flux 1.25×10^{11} *n/s* from the research reactor at the Institute Laue-Langevin (ILL) in Grenoble gave a limit on $\tau > 0.86\times10^8$ *s* in 1994 [4]. The average velocity of the cold neutrons used was ~700 *m/s* and the average neutron observation time was ~ 0.1 *s*. A vacuum of $P \simeq 2\times10^{-4} Pa$ was maintained in the neutron flight volume and Earth magnetic field was shielded down to $B < 10\ nT$. Antineutron appearance was sought through annihilation with a ~130 μm carbon film target, generating a star pattern of several secondary pions, viewed by a tracking detector, and the energy deposition of approximately more than one GeV in the surrounding calorimeter. This detection process strongly suppresses backgrounds. In one year of operation the ILL experiment saw zero candidate events with zero background [4].

In the case of a cold neutron beam traveling through a vacuum in a magnetic field $\vec{B}$, the energy gap between n and $\bar{n}$ states is given by $\Delta E = 2\vec{\mu} \cdot \vec{B}$. In NNbarX, a beam of cold neutrons with the flight time ~ 1 sec would traverse a region with high vacuum and ultra-low magnetic field such that the quasi-free condition holds giving $\Delta E \cdot t \ll \hbar$, and simple equation $P(\bar{n}, t) = (t / \tau)^2$

may be used for the $n \to \bar{n}$ transformation probability. This will imply magnetic field $\lesssim$1 nT in the whole free flight volume and vacuum better than ~ 10^{-5} Pa.

The figure of merit (or sensitivity) for a free $n \to \bar{n}$ search experiment is $N_n \cdot t^2$, where N_n is the number of free neutrons observed and t is the neutron observation time. A schematic configuration of the ILL n-nbar experiment [4] is shown in Figure 1. If the neutrons are emitted from the source isotropically with intensity I_0 per steradian the number of neutrons accepted for observation per second will be $I_0 A / L^2$, where A is the area of annihilation target and L is the distance between source and target. Since $t = L / v_n$, the sensitivity wouldn't depend on L, thus the increase of sensitivity would be possible for lower neutron velocities v_n i.e. for the source of neutrons thermalized to the lowest possible temperature (~ 35K at ILL). The initial intensity of the neutron source was determined in the ILL experiment by the curved neutron guide (not shown in Figure 1); it was slightly improved by the divergent neutron guide (see figure 1). Also, with a horizontal layout, as one shown in Figure 1, it is not possible to use for n-nbar searches very cold (< 200 m/s) and ultra-cold neutrons UCN (<7 m/s) due to effects of Earth's gravity that will not allow transport of very slow neutrons over significant distances in the horizontal direction.

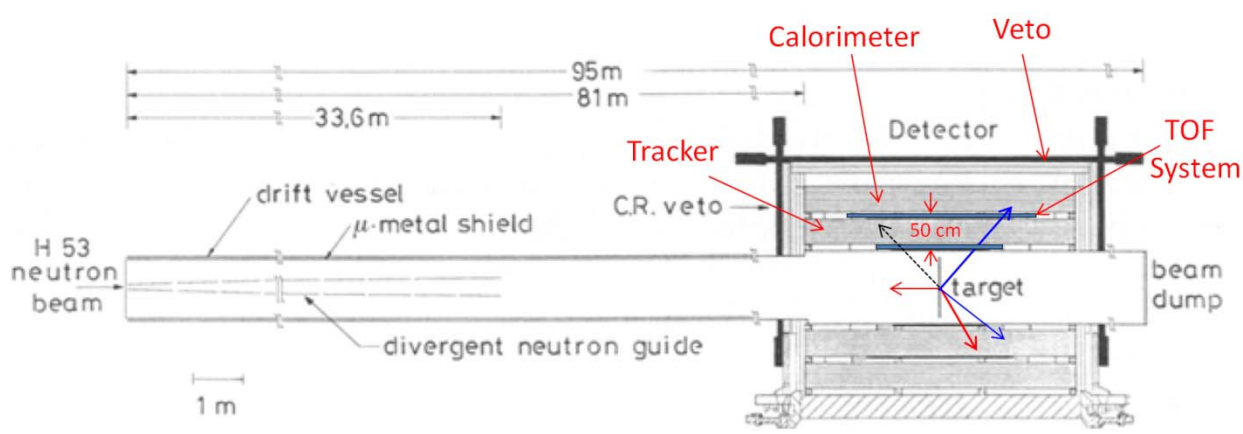

Figure 1. Configuration of the horizontal n-nbar search experiment at ILL/Grenoble [4] in 1991.

A dedicated spallation neutron source, coupled to a high-intensity beam provided by Project X, could be optimized for the enhanced production of slow (cold) neutrons with large t observation time. Progress made in neutron optics and moderator cryogenic technologies, during the last couple of decades since the time of the previous ILL-based experiment, should allow significant improvement in $n \to \bar{n}$ search sensitivity.

4. Development of conceptual design of the Cold Neutron Spallation Target (CNST)

Anticipating that Project X will be built and become a major tool for the exploration of new physics by the U.S. HEP and NP communities in the next decades, we propose to contribute in the development of the pre-conceptual design of a spallation target system, which will be a cold neutron source in a highly-optimized configuration. This CNST will provide cold neutron beams to NNbarX and n-EDM experiments in Project X. This target system will implement new technologies developed for cold and very cold neutron moderation and neutron reflectors. With the development of the Spallation Neutron Source (SNS) at the Oak Ridge National Laboratory (ORNL) and the successful operation of this high-power source (~ 1 MW), and also with the experience of LANL in construction of various spallation targets, the confidence and expertise exist within the NNbarX collaboration to design, build, and operate safely an optimized neutron source that can satisfy the requirements of the NNbar experiment. The pre-conceptual development of a Project-X spallation target system will include target design, cooling, reflectors and cryogenics, remote handling, nonconventional utilities, shielding, and the analysis of the safety aspects of the system. Emphasis in this development will be given to methods of reducing the cost of the target system by relying, when possible, on modifying previous designs (SNS at ORNL, LANL, PSI) and taking the advantages of newer technologies. Without this effort for source cost reduction, the price of the experiments could be excessive.

The plans for Project X at FNAL are staged. The first phase of Project X will utilize a 1-GeV, 1-ma proton beam. This part of the accelerator will be used as an injector to the existing FNAL accelerator complex and will also allow significant power (around 900 kW) to be used on a spallation target such that very sensitive experiments like NNbar and n-EDM can be performed in a cost effective way. These experiments can become the first experiments at Project X using the high intensity and high powered beam.

The delivery point of any high-intensity beam is a target which presents technically challenging issues such as heat removal, radiation damage, optimal neutron performance, cryogenic systems, remote handling of radioactive target elements, shielding, safety, and other aspects and components of reliable safe operation. In the US, experience of that kind exists at the Oak Ridge National Laboratory (ORNL), where a 1-MW Spallation Neutron Source (SNS) has been operated successfully for several years. Los Alamos National Laboratory (LANL) also has a long history with the construction of spallation targets. Our collaboration will combine experience and expertise of these high-powered spallation target systems by involvement of relevant target experts. Tony Gabriel, formerly the leader of the spallation Target Systems at the SNS, has experience with integrating the science and engineering associated with a large target design effort, and understands constraints on budget and schedule associated with deploying such a facility. He is presently an adjunct professor of Physics in the Physics Department at the University of Tennessee at Knoxville, TN (UTK). Also, Franz Gallmeier (SNS/ORNL) and Günter Muhrer (LANL) will contribute relevant simulation expertise in the cold source conceptual design. We expect that ORNL and LANL will support this design effort with additional participation of experienced engineers.

Figure 2. Generic configuration of the spallation target with ~ 4π emittance. Stage 1 and Stage 2 configurations will be optimized with respect to the performance and cost.

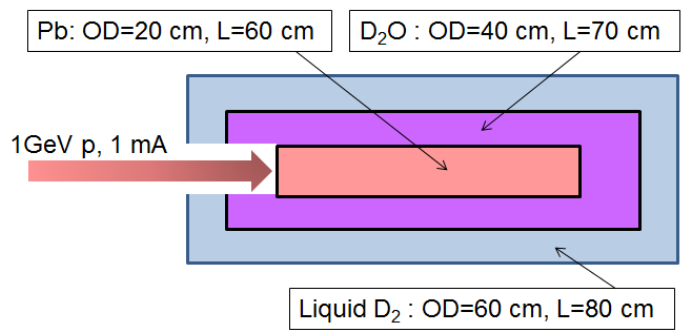

Figure 2 above shows a generic (not optimized) configuration of the spallation target that has a heavy metal core for generation of neutrons. The core will be cooled by circulating water or heavy water and will be surrounded by a liquid deuterium cryogenic moderator with optimized size and performance.

The version of the "4π-reflective cold spallation target" is shown in Figure 3, where the yield of cold neutrons can be enhanced by accumulation of cold neutrons in the trap due to reflection from a super mirror [13] lining inner surface of the graphite reflector or from a layer of diamond powder nanoparticles [14]. With these techniques it should be possible to enhance the production of cold neutrons with velocities < 450 m/s that will be most effective for increased sensitivity of the NNbarX and n-EDM experiments.

Diamond nanoparticle reflector is a new technology that, together with new ideas for the efficient neutron moderators, will require extensive R&D studies. University-owned small neutron source LENS at Indiana University together with experience and instrumentation existing at IU is perfectly suited for R&D work on neutron moderator and reflectors. This resource is planned to be used by NNbarX Collaboration.

Figure3. 4π-reflective spallation target with optional horizontal or vertical beam output.

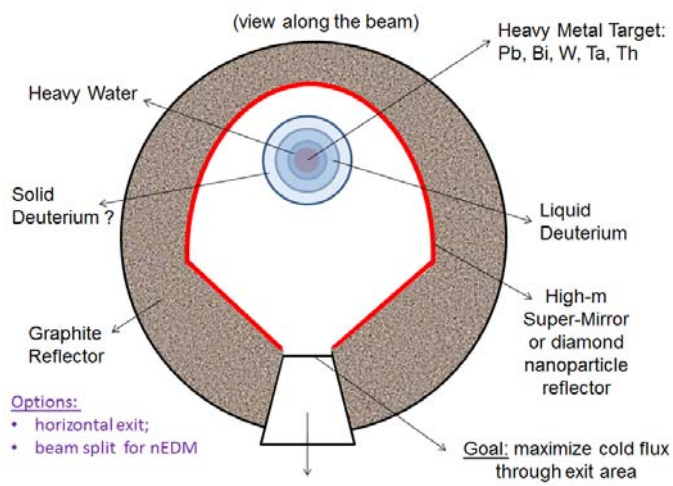

5. Increased Sensitivity of NNbarX Experiment

Besides the obvious factors (higher power, larger detector, etc.) the higher sensitivity of the NNbarX experiment, as compared to the previous ILL-based experiment [4], can be achieved due to following improvement factors [15,16]:

(1) Neutrons with transverse velocities up to 7 m/s can be 100% mirror-reflected from the surfaces of some materials that possess high Fermi-potentials. Multi-layered surfaces (super mirrors) can enhance the range of reflected transverse velocities by *m*-times due to Bragg scattering. However, reflection coefficient of super mirrors is not 100% and typically decreases with the transverse velocity due to the roughness of substrate surface and the accuracy of layers deposition. Super-mirrors with *m=4* are an industrial standard and super-mirrors with up to *m=7* can be industrially produced [13].

To enhance the sensitivity of the n-nbar search the super-mirrors can be arranged in the shape of a truncated focusing ellipsoid [16] as shown in Figure 4. The focusing reflector with a large acceptance aperture will intercept neutrons within a fixed solid angle and direct them by single reflection to the target. The cold neutron source and annihilation target will be located in the focal planes of the ellipsoid. Both the source and the target are not point-like objects; however it is possible to optimize the geometry of the reflector and the parameter *m* of the mirror material in order to maximize the sensitivity $N_n t^2$ for a given brightness of the source.

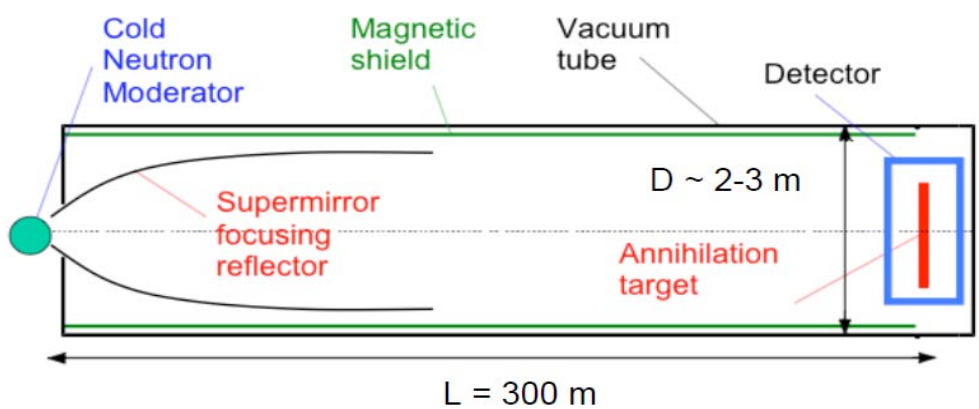

Figure 4. Schematic view of Stage-1 NNbarX experiment with horizontal layout for Project X.

(2) The second essential factor for increasing n-nbar sensitivity is a vertical layout of experiment. A vertical layout allows using the slowest neutrons from the thermalized spectrum in the observation path. For example, for a horizontal flight tube of length L=200 m, neutrons with velocity ~ 200 m/s will fly for ~ 1 sec and will fall vertically for ~ 5 m in the Earth's gravitational field. If the detector is located 5 m below the initial direction of the neutron beam line, neutrons (and correspondingly antineutrons) with lower velocities than ~ 200 m/s will not hit the annihilation target. However, neutrons with the same initial velocity ~ 200 m/s in the vertical flight tube with L=200 m will travel this distance for 0.976 s. Moreover, all neutrons slower than 200 m/s will efficiently contribute to the n-nbar sensitivity. Thus ultra-cold neutrons with initial velocity 6 m/s will fly 200-m vertical path for ~ 6 seconds contributing with factor ×36 to the sensitivity.

(3) The third essential improvement factor is due to implementation of the "4π-reflective cold spallation target" shown in Figure 3. Neutron with low velocities (< 50 m/s for m≈7 super-mirrors [13] and ≲450 m/s for diamond nanoparticle reflectors [14]; neutrons with higher velocities also can be diffusively reflected by thick graphite reflector) can be effectively accumulated in the reflecting trap with either a horizontal or vertical exit (the latter is shown in Figure 3). This accumulation of

neutrons emitted over a 4π solid angle from the cold moderator (Figure 2) will be most efficient in combination with a vertical layout where the slowest neutrons can contribute to $N_n t^2$ sensitivity. In this case the addition to the cold moderator of the ultra-cold neutron (UCN) converter can further enhance the n-nbar sensitivity due to contribution from neutrons with free flight times of a few seconds.

The sensitivity that can be achieved, with the improvement factors given above, is a complicated function of many parameters including parameters of the neutron focusing and transport, detector size, spectra of the neutrons emitted by the source, etc. We plan to create in the collaboration simulation tools for evaluation of sensitivity of n-nbar as function of the parameters and a cost model that also will be a function of the same parameters.

An underground location of the experiment might be preferable for minimization of the cost of shielding and for the reduction of cosmic backgrounds seen by the annihilation detector. Although underground location of the detector is straight forward in implementation for the vertical option of experiment, for the horizontal option it will probably require that the spallation target be located underground as well.

6. Requirements for Annihilation Detector

A free n-nbar transformation search NNbarX experiment with neutron time of flight in seconds will require a vacuum of 10^{-5} Pa and magnetic fields of B < 1 nT along the flight path of the neutrons. The target vacuum is achievable with standard vacuum technology, and the magnetic fields require an incremental improvement on the ILL experiment, achievable with passive shielding and active field compensation [4, 2].

In the design of the annihilation detector we are going to follow the state-of-the-art concept of the detector used in the ILL experiment [4]. Major subsystems of the NNbarX annihilation detector (radially in the outward direction - see Figure 1) will include: (i) the annihilation target; (ii) the detector vacuum region inside the vacuum tube; (iii) the tracker; (iv) the time of flight systems (before and after the tracker); (v) the calorimeter; and (vi) the cosmic veto system. Requirements for these subsystems are formulated below. In general, the n-nbar detector doesn't require premium performance, but due to relatively large size needs rather careful optimization of the cost. The detector should be built along the detector vacuum region (see Fig.1) with several layered detection subsystems (sections (iii) - (vi)) and should cover a significant solid angle (in θ-projection from ~ 20° to 160° corresponding to the solid angle coverage of ~ 94%). In the ϕ-projection, the detector configuration can be cylindrical, octagonal, hexagonal, or square (similar to the ILL experiment [4]).

(i) Annihilation Target. A uniform carbon disc with a thickness of ~ 100 μm and diameter ~ 2 m would serve as an annihilation target. It would be stretched on a low-Z material ring and installed in the center of the detector vacuum region. The choice of carbon is dictated by low capture cross section for thermal neutrons ~ 4 mb and high annihilation cross-section ~ 4 kb. The fraction of hydrogen in the carbon film should be controlled below ~ 0.1% to reduce generation of capture γ's.

(ii) Detector Vacuum Region. The detector vacuum region should be a tube with inner diameter ~ 2.5 m and wall thickness ~ 1.5 cm. The wall should be made of low Z material (Al) to reduce multiple scattering for tracking and provide a low (n,γ) cross section. Additional lining of the inner surface of the vacuum region with ^{6}LiF pads will reduce the generation of γ's by captured neutrons. The

detector vacuum region is expected to be the source of ~ 10^8 γ's per second originating from neutron capture. Unlike in the neutron beam flight vacuum region, no magnetic shielding is required inside the detector vacuum region. As mentioned before, the vacuum level should be 10^{-5} Pa via connection with the neutron beam vacuum region.

(iii) Tracker. The tracker should be radially extended from the outer surface of the detector vacuum tube by ~ 50 cm and should have solid angle coverage of ~ 20°-160°. It should provide rms $\lesssim$ 1cm accuracy of annihilation vertex reconstruction to the position of the target in the θ-projection (compared to 4 cm in ILL experiment). This is a very important resource for the control of background suppression in the detector. Reconstruction accuracy in the ϕ-projection can be a factor of 3 - 4 lower. Vertex information will be also used for the total momentum balance of annihilation events both in the θ- and ϕ-projections. Relevant tracker technologies can include e.g. straw tubes, proportional and drift detectors. Limited Streamer Tubes (LST), as used in the ILL experiment, are presumed to be worse than proportional mode detectors due to better discrimination of the latter to low-energy capture γ's. If it will determined that the tracker should be moved inside the detector vacuum region for better accuracy (also giving rise to the problem of gas and electrical vacuum feedthroughs), then the requirements on the detector tube material and thickness will be revisited.

(iv) Time of Flight System. The time of flight (TOF) systems should consist of two layers of fast detectors (e.g. plastic scintillation slabs or tiles) before and after the tracker with solid angle coverage of ~ 20°-160°. With appropriate segmentation, TOF should provide directional information for all tracks found in the tracker. The TOF systems could also be a part of the trigger. With two layers separated by ~ 50 cm - 60 cm, the TOF systems should have timing accuracy sufficient to discriminate the annihilation-like tracks from the cosmic ray background originated vacuum tube.

(v) Calorimeter. The calorimeter will range out the annihilation products and should provide trigger signal and energy measurements in the solid angle ~ 20°-160°. The average multiplicity of pions in annihilation at rest equals 5, so an average pion can be stopped in ~20 cm of dense material (like lead or iron). For low multiplicity (but small probability) annihilation modes, the amount of material can be larger. Calorimeter configuration used in the ILL experiment with 12 layers of Al/Pb interspersed with gas detector layers (LST in ILL experiment) might be a good approach for the calorimeter design. Detailed performance for the measurement of total energy of annihilation events and momentum balance in θ- and ϕ-projections should be determined from simulations. The proportional mode of calorimeter detector operation possibly can be less affected by copious low-energy γ background than the LST mode.

(vi) Cosmic Veto System. The cosmic veto system (CVS) should identify all cosmic ray background. All annihilation products should be totally stopped in the calorimeter. Large area detectors similar to MINOS scintillator planes might be a good approach to configuration of the CVS. Possible use of timing information should be studied in connection with the TOF system. CVS information might not be included in the trigger due to high cosmogenic rates, particularly in the stage-one horizontal n-nbar configuration on the surface, but should be recorded for all triggers in the off-line analysis.

7. Stages of NNbarX experiment

Modern neutron optics technology [13, 14], a dedicated advanced cold neutron source with 4π trap efficiently coupled to the experiment, and a vertical experiment layout should allow for an improvement in the n-nbar probability of ~ 1000 over the ILL experiment [4]. The first stage of NNbarX experiment at Project X is assumed to be a horizontal scheme similar to the ILL experiment [4] (see Fig. 4). This stage of an NNbarX experiment will represent advancement over the ILL experiment with a more efficient cold neutron source (possibly with a diamond nanoparticle reflector) and a super-mirror focusing reflector. Parameters of the cold target and of the experiment will be optimized for maximum sensitivity per minimum cost. Expected improvement in sensitivity will be a factor of 20-30 over the previous ILL experiment with free neutrons [4], and will also exceed the n-nbar limits obtained in Super-K intranuclear search [5]. The second stage of an NNbarX experiment in the later stages of Project X will combine all possible improvements including enhanced very-cold and ultra-cold neutron production and a vertical layout. The schematic of vertical option is shown in Figure 5 below. In this configuration NNbarX should be able to increase the sensitivity further by another factor of ~ 100 that will correspond to the "oscillation time" parameter of the theory of $\tau_{n\bar{n}} > 10^{10}$ seconds.

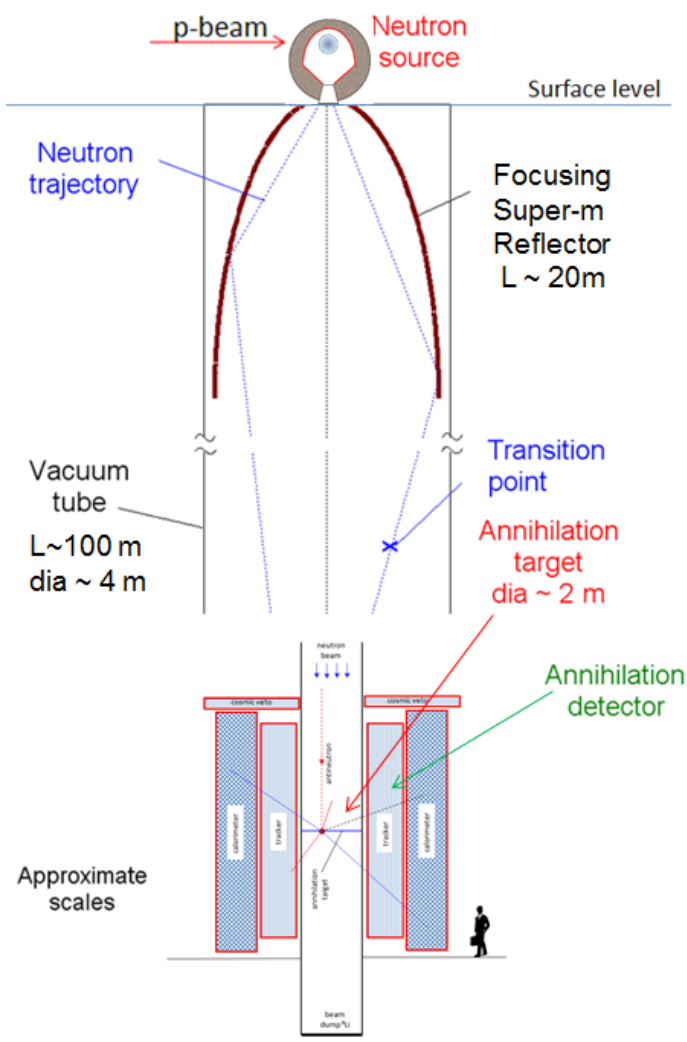

Figure 5. Schematic view of Stage-2 NNbarX experiment with vertical layout for Project X.

7. Experimental goal and timeline

Assuming the beam power up to 1 MW on the spallation target, with 1 GeV proton from the Project X linac, the goal of NNbarX will be to improve, the first stage of the experiment with horizontal layout, the sensitivity of $n \to \bar{n}$ search ($N{\cdot}t^2$) by a factor of 20-30 (compared to the previous limit set in ILL-based experiment [4]); and by additional factor of ~100 at the second stage with the vertical layout. Thus, it will be possible for several years of running to probe the range of the free neutron-antineutron oscillation time parameter up to 10^{10} s. The key feature of the proposed anti-neutron annihilation detector will be negligible background that will allow a single observed $n \to \bar{n}$ event to be a discovery. Additionally, in case of a positive observation of the $n \to \bar{n}$ transformation effect, the active magnetic shielding can be tuned to suppress the $n \to \bar{n}$ transformations and thus to confirm the observed signal.

The R&D phase of the experiment including, development of the conceptual design of the cold neutron spallation target, and conceptual design and optimization of the performance of the first-stage of NNbarX is expected to take 2-3 years. We anticipate that the project can receive the CD0 in 2013, CD1 and CD2 in 2014 and 2015 correspondingly; then construction can start in 2016 (CD3), with beginning of operation in 2018 (CD4). The running time of the first stage of NNbarX experiment is anticipated to be 2-3 years. The second stage of NNbarX will be developed depending upon the demonstration of technological principles and techniques of the first stage.

8. International Collaboration

International collaborators from India, Japan, and Russia will play important role in NNbarX.

Scientists from the Variable Energy Cyclotron Center (VECC), Kolkata, India are interested to contribute in the fabrication of a magnetic field-free cylindrical region (residual magnetic field $\lesssim$ 1 nT). They plan to work on both passive and active magnetic shielding techniques to produce initially small volumes of magnetic field-free regions and later extend developed techniques to the construction of large field-free volumes. VECC group also plans to contribute to the development of the reflector technique for the cold neutrons with diamond powder nanoparticles.

Group of Saha Institute of Nuclear Physics (SINP) in Kolkata, India has experience in building tracking chambers and will be interested to work on design and prototyping of the tracker in the annihilation detector.

Nagoya University group from Japan expressed interest to NNbarX project for the development of neutron reflector technique.

Group of St. Petersburg Nuclear Physics Institute in Russia has a long-stand experience of experimentation with cold and ultra-cold neutrons including n-EDM experiment. They can contribute in the conceptual configurations of experiment design with cold and ultra-cold neutrons.

References

[1] Fundamental Physics at the Intensity Frontier, Workshop Nov. 30 – Dec. 2, 2011, Rockville, MD., http://www.intensityfrontier.org/; J. L. Hewett et *al*. "Fundamental Physics at the Intensity Frontier," arXiv:1205.2671 [hep-ex].

[2] 2012 Project X Physics Study (PXPS12), June 14-23 2012 at Fermilab; https://indico.fnal.gov/event/projectxps12.

See also "Physics Opportunities with Stage 1 of Project X" at FNAL LBNE Reconfiguration page http://www.fnal.gov/directorate/lbne_reconfiguration/

[3] Project X Forum on Spallation Sources for Particle Physics, Fermilab, March 19-20, 2012; https://indico.fnal.gov/event/5372

[4] M. Baldo-Ceolin et al., "A New experimental limit on neutron - anti-neutron oscillations," Z. Phys. C63 (1994) 409.

[5] K. Abe *et al*. [Super-Kamiokande Collaboration], "The Search for $n-\overline{n}$ oscillation in Super-Kamiokande I," arXiv:1109.4227 [hep-ex].

[6] V. Kuzmin, V. Rubakov and M. Shaposhnikov, "On the Anomalous Electroweak Baryon Number Non-conservation in the Early Universe," Phys. Lett. B 155 (1985) 36.

[7] K. S. Babu, R. N. Mohapatra and S. Nasri, Phys. Rev. Lett. 97, 131301 (2006).

[8] M. Fukugita and T. Yanagida, Phys. Lett. B 174, 45 (1986).

[9] K. S. Babu, P. Bhupal Dev, and R. N. Mohapatra, Phys. Rev. D79 (2009) 015017 and to appear.

[10] R. Mohapatra, J. Phys. G 36, 104006 (2009).

[11] C. Dover, A. Gal, and J.M. Richard, Phys. Rev. D 27, 1090 (1983).

[12] E. Friedman and A. Gal, Phys. Rev. D 78, 16002 (2008).

[13] Industrial manufacturer of super-mirrors "Swiss Neutronics": http://www.swissneutronics.ch/

[14] V. Nesvizhevsky et al., NIM A 595 (2008) 631; E. Lychagin et al., NIM A 611 (2009) 302 and Phys. Lett. B 679 (2009) 186.

[15] W. M. Snow, "Toward An Improved Search for Neutron-Antineutron Oscillations", Nucl. Inst. Meth. A611 (2009) 144-148.

[16] Y. Kamyshkov et al., "Use of Cold Source and Large Reflector Mirror Guide for Neutron-Antineutron Oscillation Search (Proposal)", in the *Proceedings of the ICANS-XIII meeting of the International Collaboration on Advanced Neutron Sources*, Paul Scherrer Institute, Villigen, Switzerland, October 11-14, 1995, p.843.