P-1022: TAPAS Experiment at Fermilab

Daniel M. Kaplan

ILLINOIS INSTITUTE OF TECHNOLOGY
Transforming Lives.Inventing the Future.www.iit.edu

Physics Advisory Committee
Fermilab
8 Dec. 2011

Outline

- Lab situation
- Antiproton Sources
- Charm CPV
- XYZ states
- Hyperon CPV
- TAPAS apparatus
- Cost, Schedule, Compatibility, Competition...
- Conclusions

3 "killer apps"!

What makes Fermilab unique?

- Medium-energy, high-intensity neutrino beam
- Low-energy, high-intensity neutrino beam
- Long-baseline neutrino experiments

and

➡ World's best antiproton source!

Antiproton Sources

- Fermilab Antiproton Source is world's highest-energy
- And most intense:

Table 1: Antiproton energies and intensities at existing and future facilities.

Facility	$\overline{p}$ Kinetic Energy (GeV)	Stacking: Rate (10^{10}/hr)	Stacking: Duty Factor	Operation: Hours /Yr	Operation: $\overline{p}$/Yr (10^{13})
CERN AD	0.005 0.047	–	–	3800	0.4
Fermilab Accumulator:					
Tevatron Collider	8	>25	90%	5550	>150
proposed	≈ 3.5–8	20	15%	5550	17
FAIR ($\gtrsim$ 2018*)	1–14	3.5	15%*	2780*	1.5

… even after ($\approx$1G€) FAIR@Darmstadt turns on

▶ What compelling physics can we do with it?

Non-KM CP Violation

- 5 places to search for new sources of CPV:
  - Kaons
  - B mesons
  - Hyperons
  - Charm
  - Neutrinos

Years of intensive new-physics searches have so far come up empty*

Crucial to look elsewhere as well!

(+ EDMs – but they're T-violating)

*except for (unconfirmed) DØ dimuon anomaly

Charm CP Violation

Singly Cabibbo-suppressed (CS) *D* decays have 2 competing diagrams:

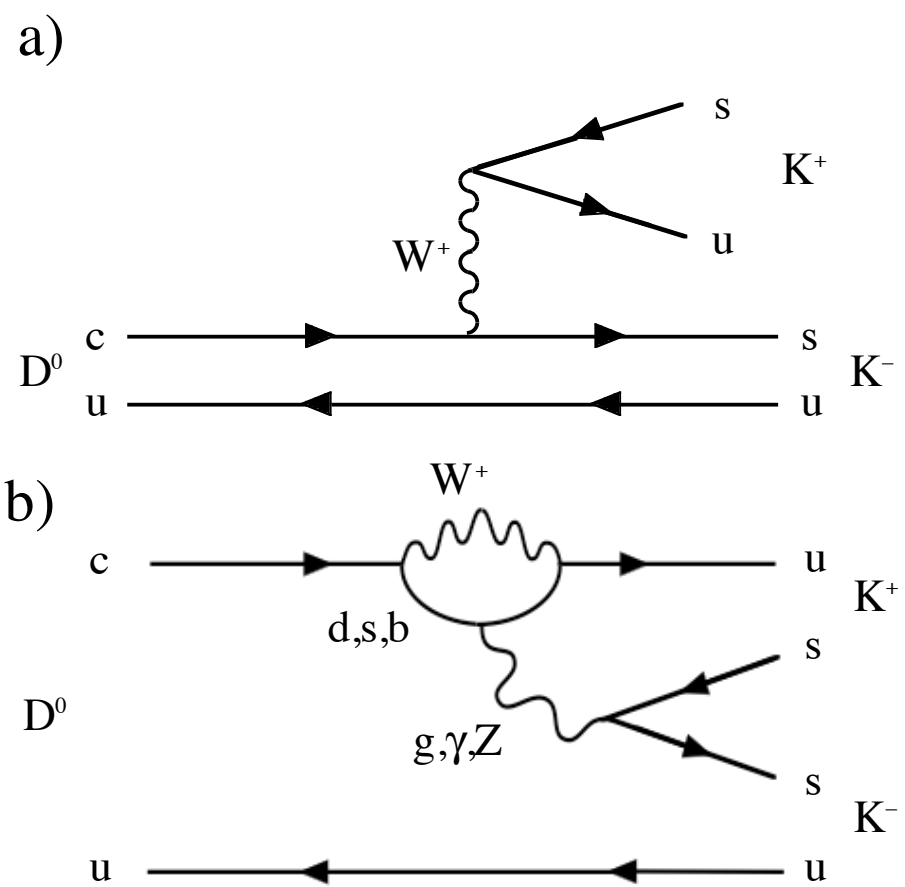

- SM: Penguin– Tree interf. in CS modes → $\mathcal{O}(10^{-4}–10^{-3})$ CPV

☞ LHC*b*: much larger effect?

- SM: In CF & DCS modes, only 1 diagram

⇒0 direct CPV

- Indirect CPV also possible –

  - ≈ mode-indep., & small in SM

➡Many potential "smoking guns" for New Physics

➡Unique access to up-sector NP

New LHC*b* D^0 CPV Result

- Last month at HCP 2011: LHC*b* 3.5σ signal for D^0 direct CPV (based on 1.4 × 10^6 tagged K^+K^-, 0.4 × 10^6 $\pi^+\pi^-$)
  - $$A_{RAW}(f)^* = \boxed{A_{CP}(f)} + \boxed{A_D(f)} + \boxed{A_D(\pi_s)} + \boxed{A_P(D^{*+})}$$

    physics CP asymmetry

    Detection asymmetry of D^0

    Detection asymmetry of soft pion

    Production asymmetry
  - $$\Delta A_{CP} \equiv A_{CP}(K^-K^+) - A_{CP}(\pi^-\pi^+)$$
    $$= [-0.82 \pm 0.21(\text{stat.}) \pm 0.11(\text{sys.})]\,\%$$
- Claim systematics ≈ cancel due to subtraction

➡ The first evidence for New Physics from LHC?

- CDF: $\Delta A_{CP} = \left(-0.46 \pm 0.31\ (\text{stat}) \pm 0.12\ (\text{syst})\right)\%$ >1/2 CDF's recorded sample arXiv:1111.5023
  - Independent confirmation now becomes <u>urgent</u>

LHC*b* Comparison with world average

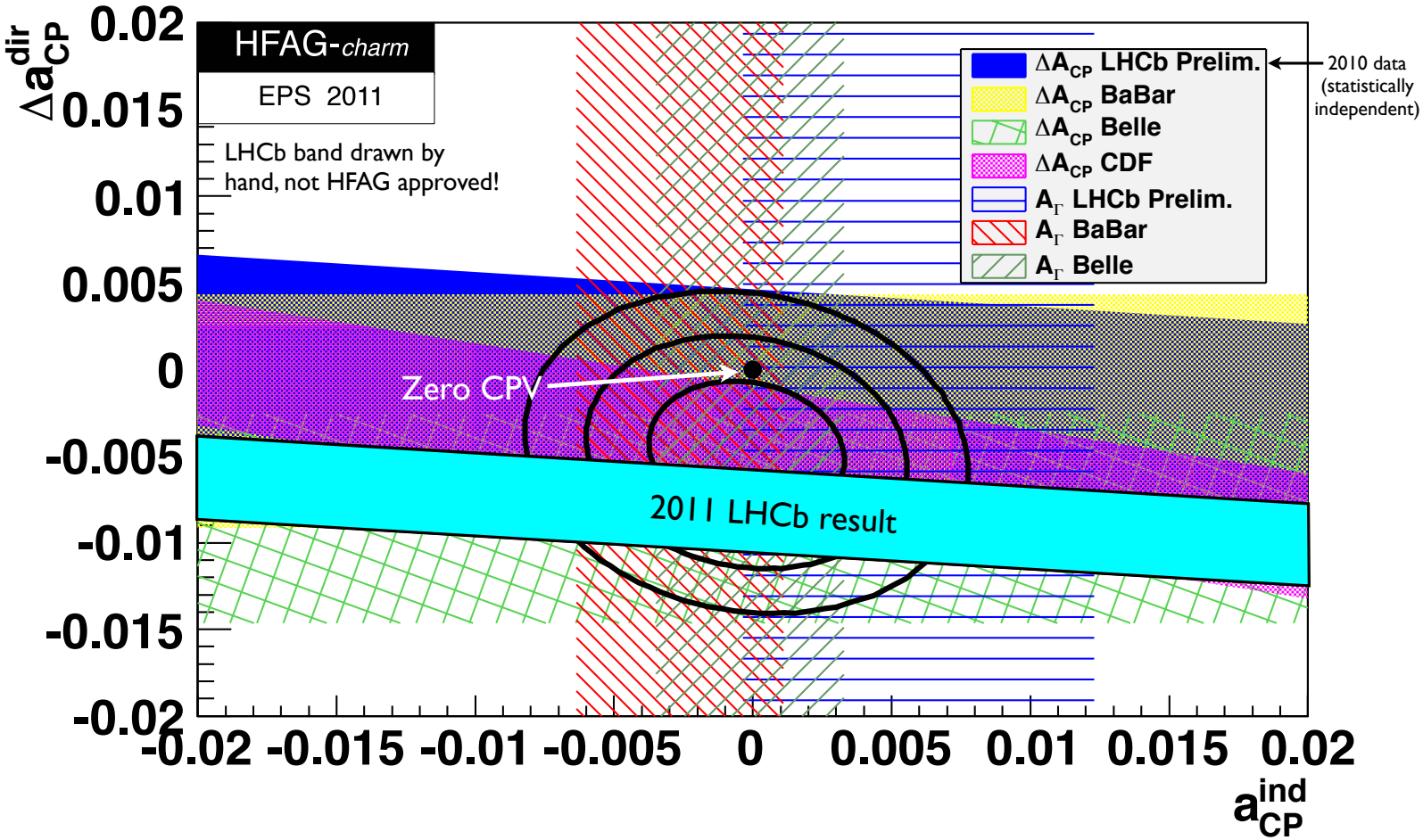

LHC*b* Comparison with world average

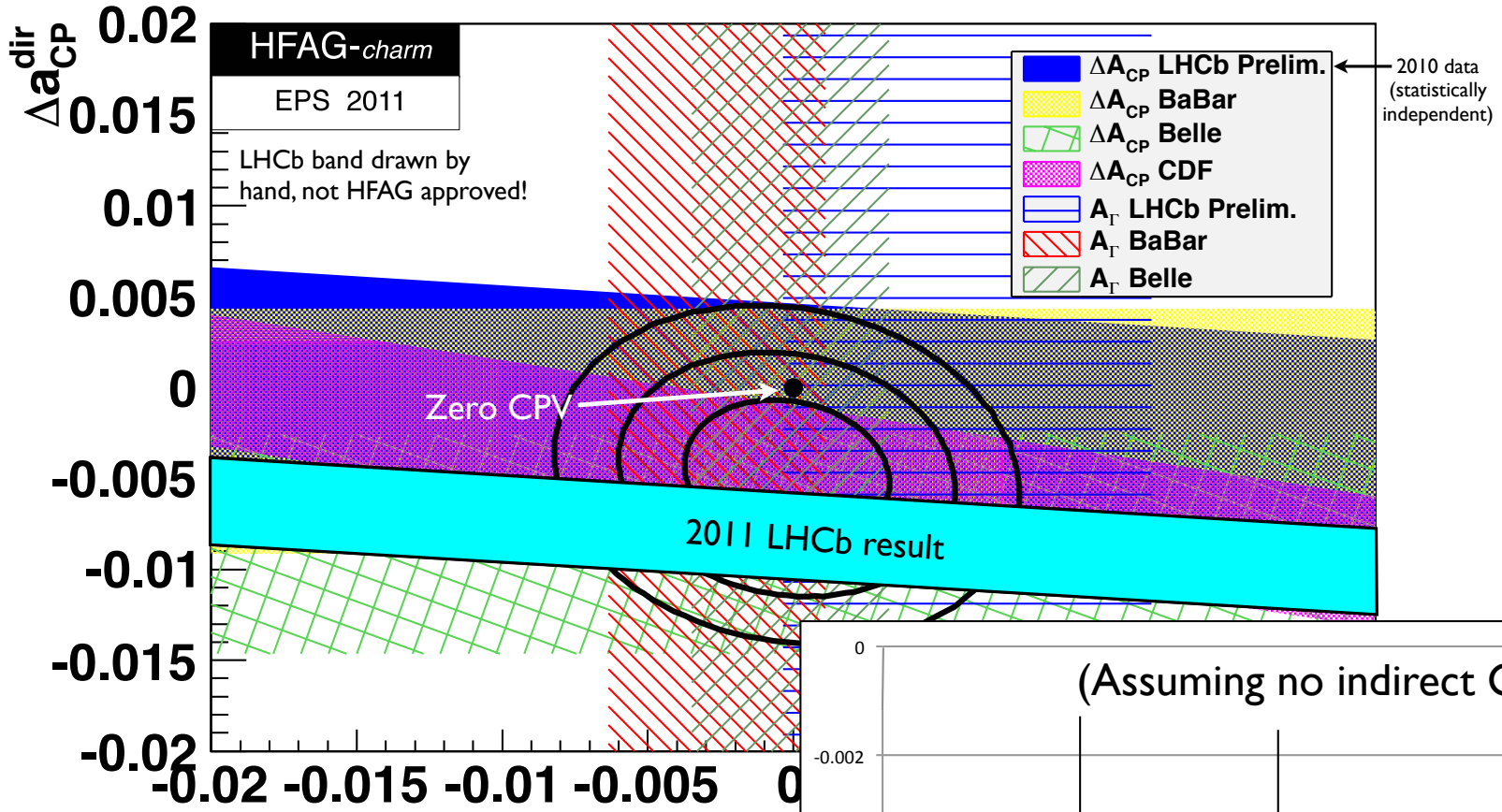

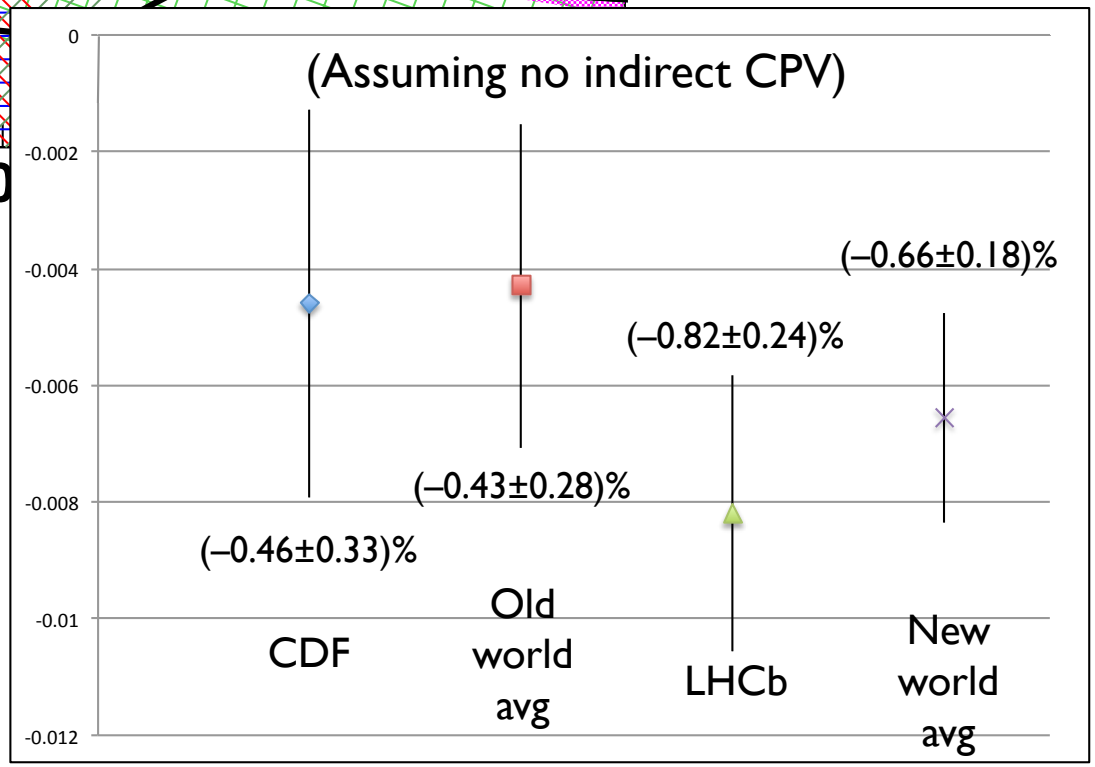

How big is charm cross section in 8 GeV $\bar{p}p$ annihilation?

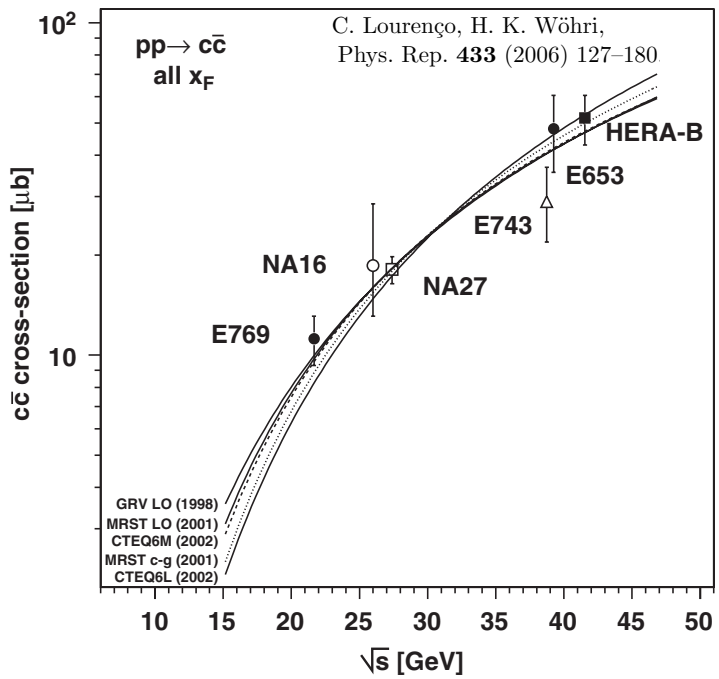

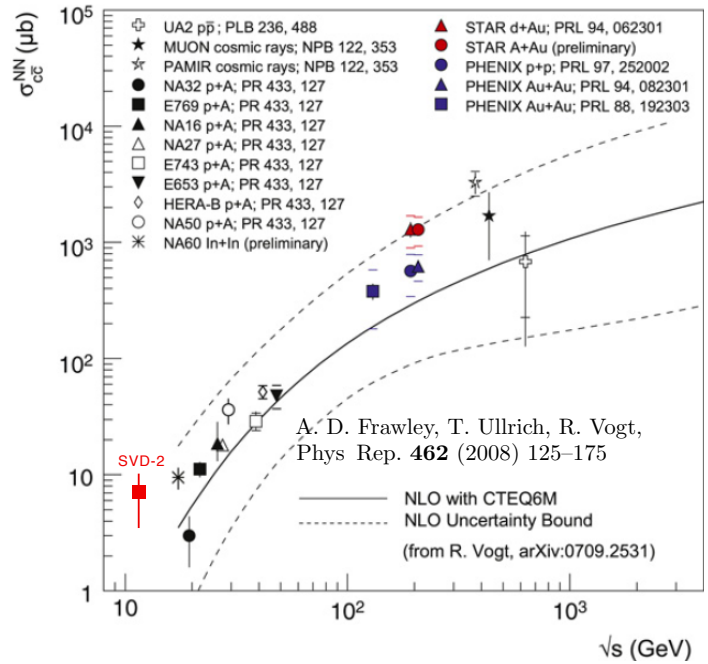

- Perturbative QCD not a useful guide

How big is charm cross section in 8 GeV $\bar{p}p$ annihilation?

- Estimates of total charm cross section using pQCD (below its range of validity) give ~10-nb values (Artoisenet & Braaten, Vogt)
- Model calculations of exclusive cross sections:

Braaten formula ($\bar{p}p \to K^*K$ extrapolation):	$\bar{p}p \to D^0\bar{D}^{*0} \approx 1.25\ \mu b$
Titov & Kämpfer (Regge + SU(4)):	$\bar{p}p \to D^0\bar{D}^{*0} \approx 0.2\ \mu b$
Khodjamirian et al. (Regge + LCSR):	$\bar{p}p \to D^0\bar{D}^0 \approx 0.14\ \mu b$

- Plausible that inclusive cross section is $\mathcal{O}(\mu b)$
  - if so, a "gold mine"!
- TAPAS can measure it with a few months of running
  - will do much more besides

$\bar{p}$ Charm Statistics

- Sensitivity estimate, assuming $\sigma \propto A^{1.0}$ and $\mathcal{L} = 2 \times 10^{32}$ cm^{-2} s^{-1}:

Quantity	Value	Unit
Running time	2×10^7	s/yr
Duty factor	0.8*	
$\mathcal{L}$	2×10^{32}	cm^{-2}s^{-1}
Annual integrated $\mathcal{L}$	3.2	fb^{-1}
Target A (Ti)	47.9	
$A^{0.29}$	3.1 (based on H.E. fixed-target)	
$\sigma(\bar{p}p \to D^{*+} + \text{anything})$	1.25–4.5	μb
# $D^{*\pm}$ produced	$(2.5\text{–}8.9) \times 10^{10}$	events/yr
$\mathcal{B}(D^{*+} \to D^0\pi^+)$	0.677	
$\mathcal{B}(D^0 \to K^-\pi^+)$	0.0389	
Acceptance	0.45 (signal MC)	
Efficiency	0.1–0.3 (MIPP & bkg MC)	
Total	$(0.3\text{–}3) \times 10^8$	tagged events/yr

*Assumes ≈15% of running time is devoted to antiproton-beam stacking.

- 3–30 x 10^7 tagged $K^{\mp}\pi^{\pm}$ ⇒ 3–30 x 10^6 K^+K^-, 1–10 x 10^6 $\pi^+\pi^-$

⇒ $\delta\Delta A \approx$ (0.14 to 0.05)% | LHC*b*: $[-0.82 \pm 0.21(\text{stat.}) \pm 0.11(\text{sys.})]\,\%$

⇒ competitive with LHC*b* *in one year of* $\bar{p}$ *running*

$\bar{p}$ Charm Statistics

- Sensitivity estimate, assuming $\sigma \propto A^{1.0}$ and $\mathcal{L} = 2 \times 10^{32}$ cm^{-2} s^{-1}:

Quantity	Value	Unit
Running time	2×10^7	s/yr
Duty factor	0.8*	
$\mathcal{L}$	2×10^{32}	cm^{-2}s^{-1}
Annual integrated $\mathcal{L}$	3.2	fb^{-1}
Target A (Ti)	47.9	
$A^{0.29}$	3.1 (based on H.E. fixed-target)	
$\sigma(\bar{p}p \to D^{*+} + \text{anything})$	1.25–4.5	μb
# $D^{*\pm}$ produced	$(2.5\text{–}8.9) \times 10^{10}$	events/yr
$\mathcal{B}(D^{*+} \to D^0\pi^+)$	0.677	
$\mathcal{B}(D^0 \to K^-\pi^+)$	0.0389	
Acceptance	0.45 (signal MC)	
Efficiency	0.1–0.3 (MIPP & bkg MC)	
Total	$(0.3\text{–}3) \times 10^8$	tagged events/yr

*Assumes ≈15% of running time is devoted to antiproton-beam stacking.

But keep in mind:
Main issue is systematics. Ours will be quite different from theirs, thus truly indep. x-check.

- 3–30 x 10^7 tagged $K^{\mp}\pi^{\pm}$ ⇒ 3–30 x 10^6 K^+K^-, 1–10 x 10^6 $\pi^+\pi^-$

⇒ $\delta\Delta A \approx$ (0.14 to 0.05)% | LHC*b*: $[-0.82 \pm 0.21(\text{stat.}) \pm 0.11(\text{sys.})]\,\%$

⇒ competitive with LHC*b* *in one year of* $\bar{p}$ *running*

$\bar{p}$ Charm Systematics

- LHC*b* has: high charged multiplicity per event, multiple simultaneous interactions, beauty background, production asymmetry, and *B*-field nonuniformity (affects tagging-$\pi_s^{\pm}$ efficiency)
- $\bar{p}$ has none of these

  But possibly a $D\bar{D}$ average-momentum difference

➡ Can control with tagged and untagged $D^0 \to K^{\mp}\pi^{\pm}$ samples (10x bigger than $D^0 \to K^+K^-$ samples)

Hyperon CP Violation

- Example Feynman diagrams (SM):

Λ decay:

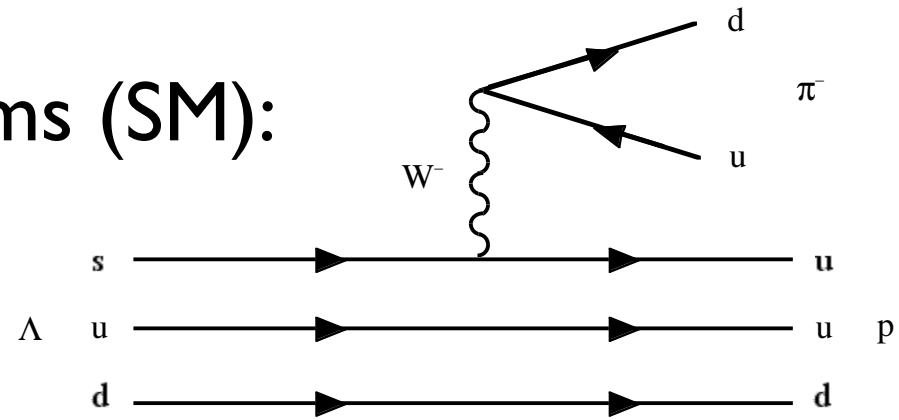

Λ penguin decay:

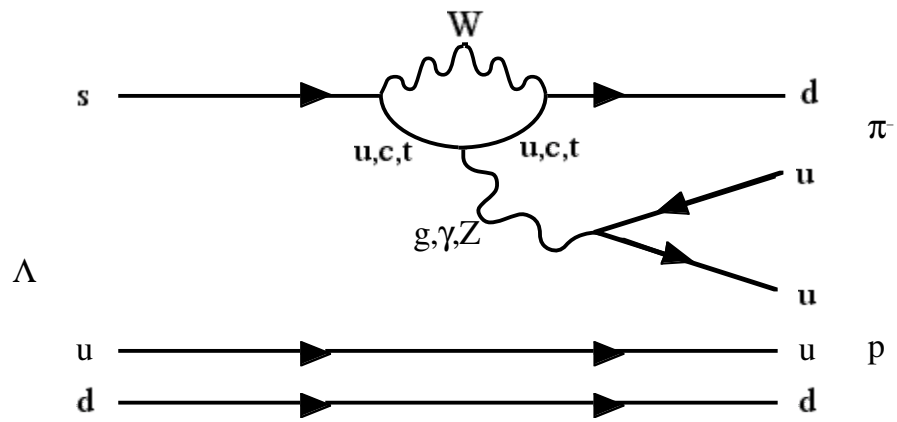

- New physics could also contribute – e.g., SUSY chromo-magnetic penguins* might feed both *D* & hyperon CPV

⇒Hyperon CP asymmetries could yield important clues!

* He, Murayama, Pakvasa, Valencia, PRD 61, 071701 (2000)

Hyperon CP Violation

- Differently sensitive to New Physics than *B*, *K* CPV
- Hyperon CP asymmetries small in hyperon decay
- NP can boost them by up to 2 orders of magnitude:

Table 5: Summary of predicted hyperon *CP* asymmetries.

Asymm.	Mode	SM	NP	Ref.
A_Λ	$\Lambda \to p\pi$	$\lesssim 10^{-5}$	$\lesssim 6 \times 10^{-4}$	[68]
$A_{\Xi\Lambda}$	$\Xi^\mp \to \Lambda\pi,\ \Lambda \to p\pi$	$\lesssim 5 \times 10^{-5}$	$\leq 1.9 \times 10^{-3}$	[69]
$A_{\Omega\Lambda}$	$\Omega \to \Lambda K,\ \Lambda \to p\pi$	$\leq 4 \times 10^{-5}$	$\leq 8 \times 10^{-3}$	[36]
$\Delta_{\Xi\pi}$	$\Omega \to \Xi^0\pi$	2×10^{-5}	$\leq 2 \times 10^{-4}$ *	[35]
$\Delta_{\Lambda K}$	$\Omega \to \Lambda K$	$\leq 1 \times 10^{-5}$	$\leq 1 \times 10^{-3}$	[36]

*Once they are taken into account, large final-state interactions may increase this prediction [56].

☞ Small sizes of $(A,\Delta)_{SM}$ favorable for NP CPV search!

Hyperon CP Violation

- Measurement history:

Experiment	Decay Mode	A_Λ	
R608 at ISR	$pp \to \Lambda X, \bar{p}p \to \bar{\Lambda} X$	**-0.02 ± 0.14**	[P. Chauvat et al., PL 163B (1985) 273]
DM2 at Orsay	$e^+e^- \to J/\Psi \to \Lambda\bar{\Lambda}$	**0.01 ± 0.10**	[M.H. Tixier et al., PL B212 (1988) 523]
PS185 at LEAR	$p\bar{p} \to \Lambda\bar{\Lambda}$	**0.006 ± 0.015**	[P.D. Barnes et al., NP B 56A (1997) 46]

Experiment	Decay Mode	$A_\Xi + A_\Lambda$	
E756 at Fermilab	$\Xi \to \Lambda\pi, \Lambda \to p\pi$	**0.012 ± 0.014**	[K.B. Luk et al., PRL 85, 4860 (2000)]
E871 at Fermilab (HyperCP)	$\Xi \to \Lambda\pi, \Lambda \to p\pi$	**$(0.0 \pm 6.7) \times 10^{-4}$**	[T. Holmstrom et al., PRL 93. 262001 (2004)]
		$(-6 \pm 2 \pm 2) \times 10^{-4}$	[BEACH08 preliminary; PRL in prep]

Hyperon CP Violation

- Measurement history:

Experiment	Decay Mode	
R608 at ISR	$pp \to \Lambda X, \bar{p}p \to \bar{\Lambda} X$	-0.(
DM2 at Orsay	$e^+e^- \to J/\Psi \to \Lambda\bar{\Lambda}$	0.0
PS185 at LEAR	$p\bar{p} \to \Lambda\bar{\Lambda}$	0.0(

Experiment	Decay Mode	A_Ξ
E756 at Fermilab	$\Xi \to \Lambda\pi, \Lambda \to p\pi$	0.012
E871 at Fermilab (HyperCP)	$\Xi \to \Lambda\pi, \Lambda \to p\pi$	(0.0 ±

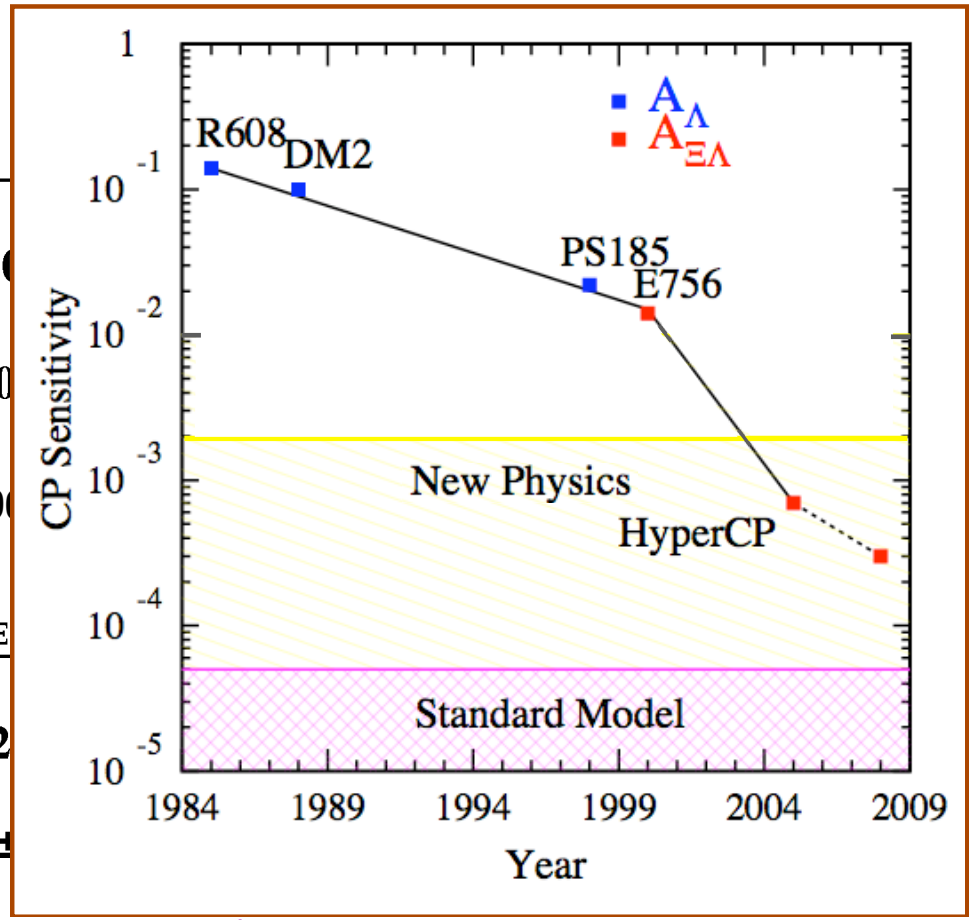

$(-6 \pm 2 \pm 2) \times 10^{-4}$ [BEACH08 preliminary; PRL in prep]

Made possible by... Enormous HyperCP Dataset

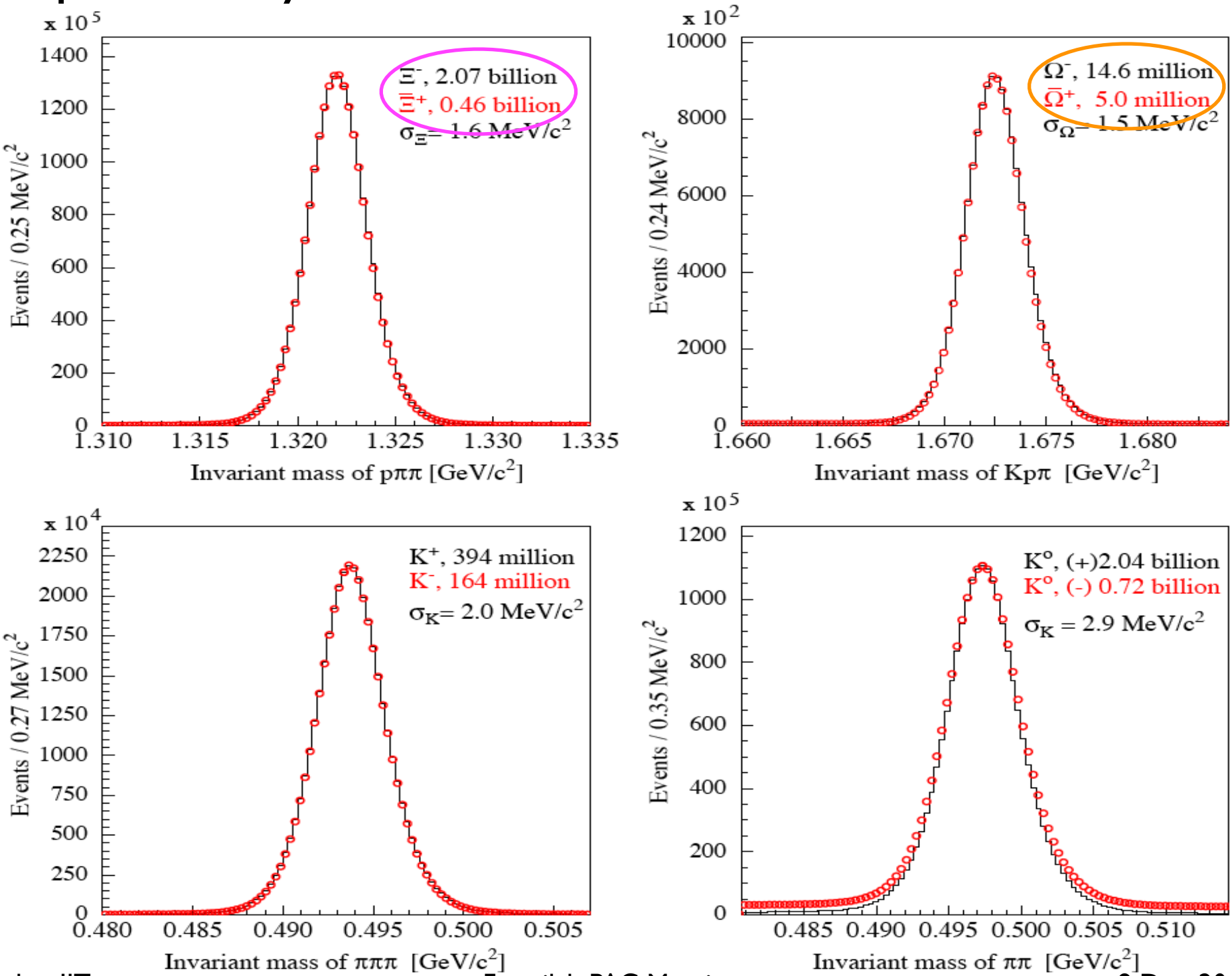

Hyperon CPV Sensitivity Estimates

Reaction	σ assumed	Events recon/yr	Sensitivity
$\bar{p}p \to \bar{\Omega}^+\Omega^-$	60 nb	9.0×10^7	
$\Omega \to \Lambda K^-$	″	3.9×10^7	$\delta\Delta_{\Lambda K} \approx 8.0 \times 10^{-5}$
$\Omega \to \Xi^0\pi^-$	″	1.3×10^7	$\delta\Delta_{\Xi\pi} \approx 1.4 \times 10^{-4}$
$\bar{p}p \to \bar{\Xi}^+\Xi^-$	2 μb	$2 \times 10^{9*}$	$\delta A_\Xi \approx 1.4 \times 10^{-4\dagger}$
″	″	″	$\delta B_\Xi \approx 3 \times 10^{-5\dagger}$

* Assuming efficient $\bar{p}$ deceleration to $p_{\bar{p}} \approx 3$ GeV/c

† Assuming Ξ polarization behaves similarly to Λ polarization in $\bar{p}p \to \bar{\Lambda}\Lambda$; note that this will be the world's first measurement of these quantities, and that B is typically expected to be $\mathcal{O}(10^2\, A)$

- TAPAS measurement of A_Ξ and B_Ξ will substantially reduce theoretical uncertainties

➡ Eliminates uncertainty of final-state phase shift

Hyperon CPV Sensitivity Estimates

- Major systematic on $\Delta_{\Lambda K}$, $\Delta_{\Xi\pi}$:
  - differential absorption of hyperon decay products in spectrometer material
- Geant4 sims., 8M $\bar{p}p \rightarrow \bar{\Omega}^+\Omega^- \rightarrow \bar{\Lambda}K^+\,\Lambda K^-$ events:
  - assume any decay product interacting in beam pipe is lost (conservative, since some can be recovered)

- Results:

Beam pipe	Fake asymmetry
500 μm Be	$(18.7 \pm 2.2) \times 10^{-4}$
250 μm Be	$(8.1 \pm 2.2) \times 10^{-4}$

- 500 μm Be pipes available
- ~ 250 μm likely feasible
- Fake asymmetry correctable to about 10%

$\Longrightarrow 10^{-4}$ sensitivity OK

Nature of *XYZ* States

- *Many* new states observed in charmonium region – what are they???

XYZ hadronic transitions

- Many new states : ?

State	EXP	M + i Γ (MeV)	J^{PC}	Decay Modes Observed	Production Modes Observed
X(3872)	Belle,CDF, D0, Cleo, BaBar	3871.2±0.5 + i(<2.3)	1^{++}	$\pi^+\pi^-J/\psi$, $\pi^+\pi^-\pi^0J/\psi$, $\gamma J/\psi$	B decays, ppbar
	Belle BaBar	$3875.4\pm0.7^{+1.2}_{-2.0}$ $3875.6\pm0.7^{+1.4}_{-1.5}$		$D^0D^0\pi^0$	B decays
Z(3930)	Belle	3929±5±2 + i(29±10±2)	2^{++}	D^0D^0, D^+D^-	$\gamma\gamma$
Y(3940)	Belle BaBar	3943±11±13 + i(87±22±26) $3914.3^{+3.8}_{-3.4}\pm1.6+ i(33^{+12}_{-8}\pm0.60)$	J^{++}	$\omega J/\psi$	B decays
X(3940)	Belle	$3942^{+7}_{-6}\pm6 + i(37^{+26}_{-15}\pm8)$	J^{P+}	DD^*	e^+e^- (recoil against J/ψ)
Y(4008)	Belle	$4008\pm40^{+72}_{-28} + i(226\pm44^{+87}_{-79})$	1^{--}	$\pi^+\pi^-J/\psi$	e^+e^- (ISR)
X(4160)	Belle	$4156^{+25}_{-20}\pm15+ i(139^{+111}_{-61}\pm21)$	J^{P+}	D^*D^*	e^+e^- (recoil against J/ψ)
Y(4260)	BaBar Cleo Belle	$4259\pm8^{+8}_{-6} + i(88\pm23^{+6}_{-4})$ $4284^{+17}_{-16}\pm4 + i(73^{+39}_{-25}\pm5)$ $4247\pm12^{+17}_{-32} + i(108\pm19\pm10)$	1^{--}	$\pi^+\pi^-J/\psi$, $\pi^0\pi^0J/\psi$, K^+K^-J/ψ	e^+e^- (ISR), e^+e^-
Y(4350)	BaBar Belle	4324±24 + i(172±33) 4361±9±9 + i(74±15±10)	1^{--}	$\pi^+\pi^-\psi(2S)$	e^+e^- (ISR)
$Z^+(4430)$	Belle	$4433\pm4\pm1+ i(44^{+17}_{-13}{}^{+30}_{-11})$	J^P	$\pi^+\psi(2S)$	B decays
Y(4620)	Belle	4664±11±5 + i(48±15±3)	1^{--}	$\pi^+\pi^-\psi(2S)$	e^+e^- (ISR)

XYZ hadronic transitions

- Many new states : ?

Is a new form of matter being glimpsed???

State	EXP	M + i Γ (MeV)	J^{PC}	Decay Observed	Production Modes Observed
X(3872)	Belle,CDF, D0, Cleo, BaBar	3871.2±0.5 + i(<2.3)	1^{++}	$\pi^+\pi^-J/\psi$, $\pi^+\pi^-\pi^0J/\psi$, $\gamma J/\psi$	B decays, ppbar
	Belle BaBar	$3875.4\pm0.7^{+1.2}_{-2.0}$ $3875.6\pm0.7^{+1.4}_{-1.5}$		$D^0D^0\pi^0$	B decays
Z(3930)	Belle	3929±5±2 + i(29±10±2)	2^{++}	D^0D^0, D^+D^-	$\gamma\gamma$
Y(3940)	Belle BaBar	3943±11±13 + i(87±22±26) $3914.3^{+3.8}_{-3.4}\pm1.6+ i(33^{+12}_{-8}\pm0.60)$	J^{++}	$\omega J/\psi$	B decays
X(3940)	Belle	$3942^{+7}_{-6}\pm6 + i(37^{+26}_{-15}\pm8)$	J^{P+}	DD^*	e^+e^- (recoil against J/ψ)
Y(4008)	Belle	$4008\pm40^{+72}_{-28} + i(226\pm44^{+87}_{-79})$	1^{--}	$\pi^+\pi^-J/\psi$	e^+e^- (ISR)
X(4160)	Belle	$4156^{+25}_{-20}\pm15+ i(139^{+111}_{-61}\pm21)$	J^{P+}	D^*D^*	e^+e^- (recoil against J/ψ)
Y(4260)	BaBar Cleo Belle	$4259\pm8^{+8}_{-6} + i(88\pm23^{+6}_{-4})$ $4284^{+17}_{-16}\pm4 + i(73^{+39}_{-25}\pm5)$ $4247\pm12^{+17}_{-32} + i(108\pm19\pm10)$	1^{--}	$\pi^+\pi^-J/\psi$, $\pi^0\pi^0J/\psi$, K^+K^-J/ψ	e^+e^- (ISR), e^+e^-
Y(4350)	BaBar Belle	4324±24 + i(172±33) 4361±9±9 + i(74±15±10)	1^{--}	$\pi^+\pi^-\psi(2S)$	e^+e^- (ISR)
$Z^+(4430)$	Belle	$4433\pm4\pm1+ i(44^{+17}_{-13}{}^{+30}_{-11})$	J^P	$\pi^+\psi(2S)$	B decays
Y(4620)	Belle	4664±11±5 + i(48±15±3)	1^{--}	$\pi^+\pi^-\psi(2S)$	e^+e^- (ISR)

Nature of *XYZ* States

- *Many* new states observed in charmonium region – what are they???
  - $c\bar{c}$, tetraquarks, molecules, gluonic hybrids...?
- $X(3872)$, $X(3940)$, $Y(3940)$, $Y(4260)$, and $Z(3930)$, and more beyond, all within $\bar{p}$ Source reach*
  - are there more besides these?
- $X(3872)$ of particular interest – may be the first of several meson-antimeson molecules ($D^0\,\bar{D}^{*0}$ + c.c.)

➡ need *very* precise mass measurement to confirm or refute

➡ $\bar{p}p \rightarrow X(3872)$ formation *ideal* for this...

* Accumulator energy can be pushed up to $\sqrt{s} \approx 4.5$ GeV with minor upgrades (V. Lebedev)

Example: precision $\bar{p}p$ mass & width measurements

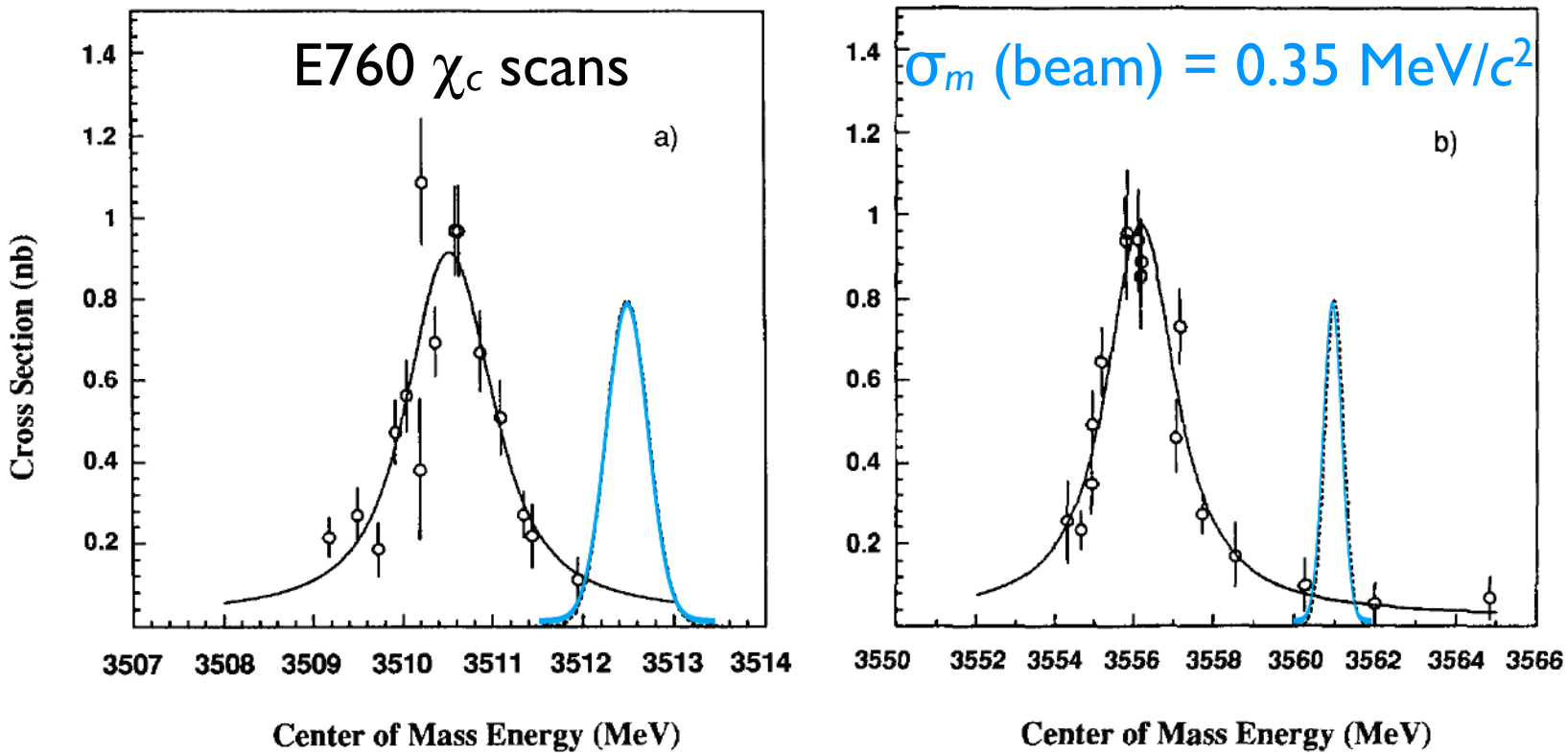

- The beam is the spectrometer! $\rightarrow \begin{cases} \delta m(\chi_c) \approx 0.1 \pm 0.02 \text{ MeV}/c^2 \\ \delta\Gamma(\chi_c) \approx 0.1 \pm 0.01 \text{ MeV}/c^2 \end{cases}$
- The experiment is just the detector.

▶ Unique opportunity to discern nature of these states

How to do it?

- We have a solution...
- Can assemble capable experiment quickly
  - Where excellent equipment exists, use it
  - Can stage installation if necessary
  - Apparatus well-matched to the proposed physics

Antiproton Accumulator

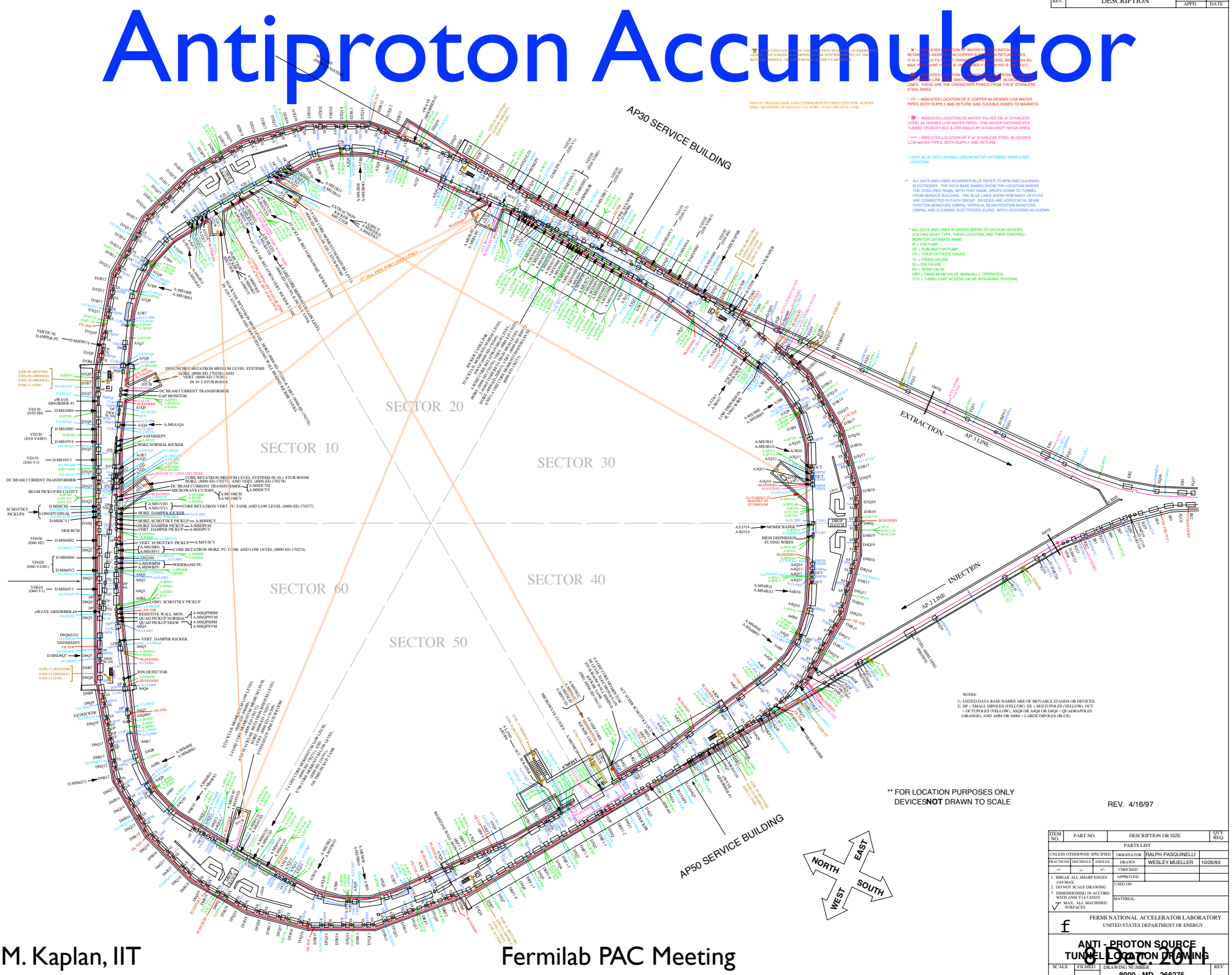

E760/835 Pit

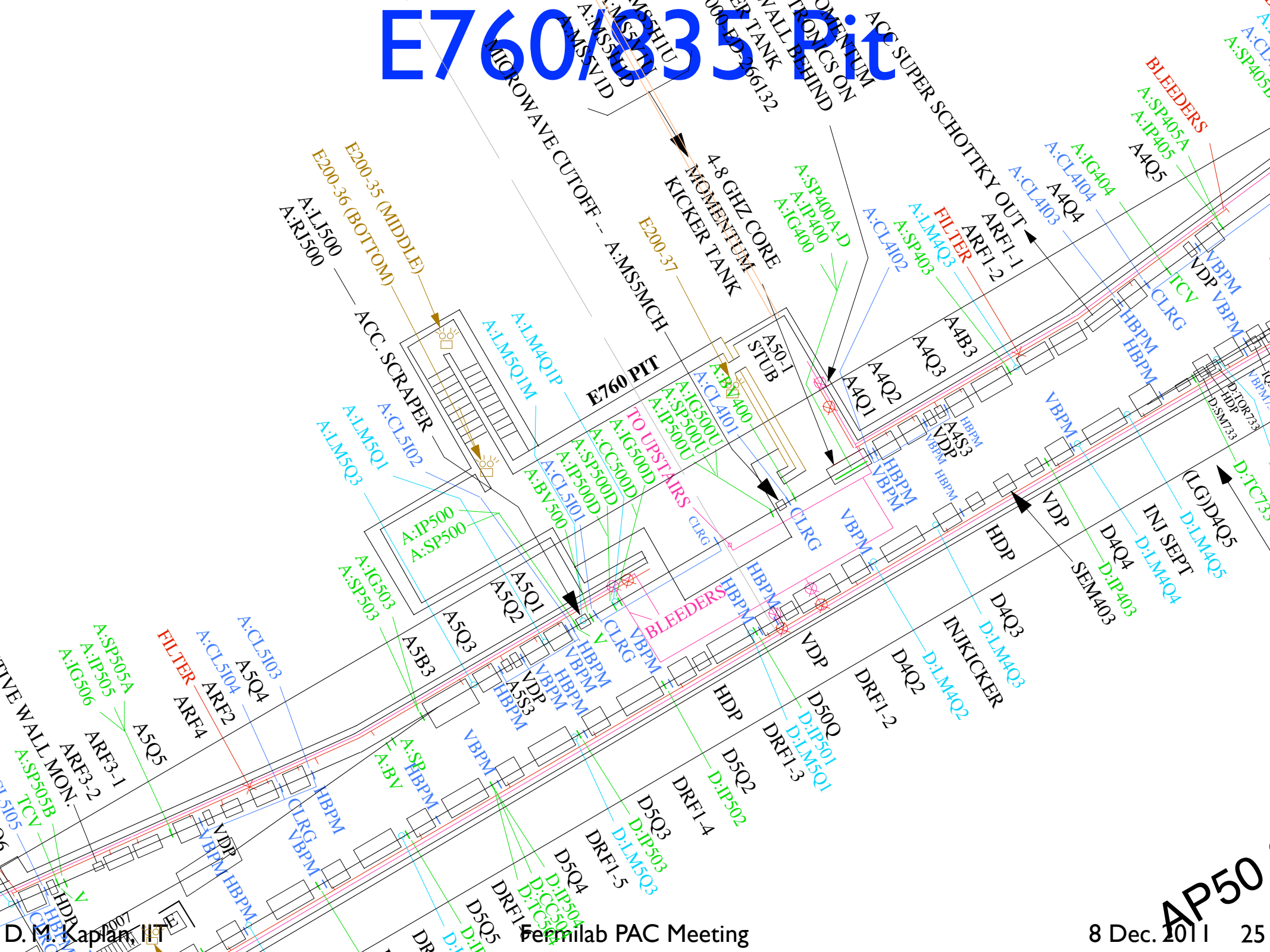
MICROWAVE CUTOFF -- A:MS5MCH
E200-35 (MIDDLE)
E200-36 (BOTTOM)
E200-37
A:LJ500
A:RJ500
ACC. SCRAPER
E760 PIT
4-8 GHZ CORE MOMENTUM KICKER TANK
ACC SUPER SCHOTTKY OUT
BLEEDERS
FILTER
TO UPSTAIRS
VBLEEDERS
INJ SEPT
INJKICKER
SEM403
(LG)D4Q5
A:IP500
A:SP500
A:IG503
A:SP503
A:SP505A
A:IP505
A:IG506
A:SP505B
ARF4
ARF2
ARF3-2
ARF3-1
A5Q5
A5Q4
A5Q3
A5Q2
A5Q1
A5B3
A5S3
A4Q5
A4Q4
A4Q3
A4Q2
A4Q1
A4B3
A4S3
A50-1 STUB
D5Q5
D5Q4
D5Q3
D5Q2
D50Q
D4Q3
D4Q2
D4Q4
DRF1-5
DRF1-4
DRF1-3
DRF1-2
HDP
VDP
HBPM
VBPM
CLRG
TCV
V

E760/835 in situ

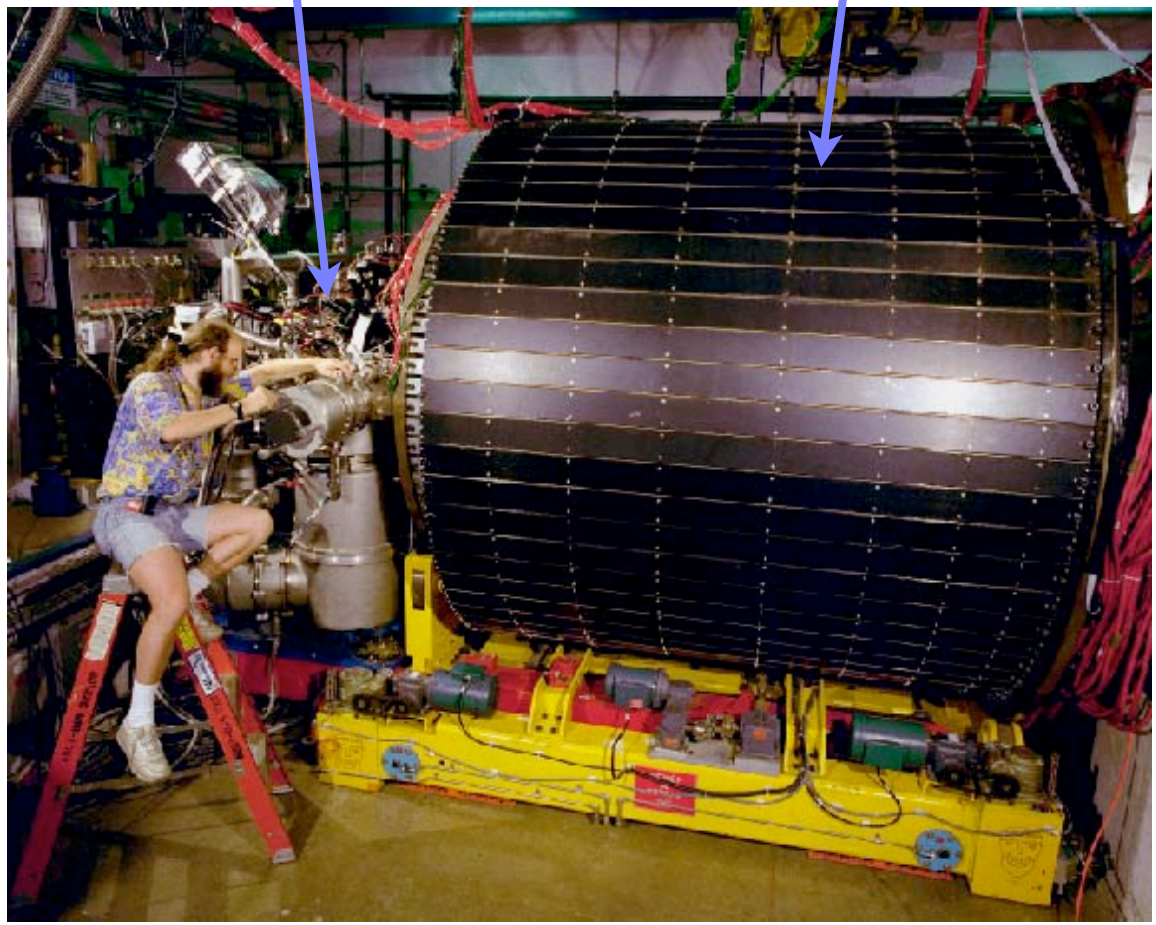

TAPAS

(The AntiProton Annihilation Spectrometer)

- Our proposal:
  - Reinstall E760/835 barrel calorimeter

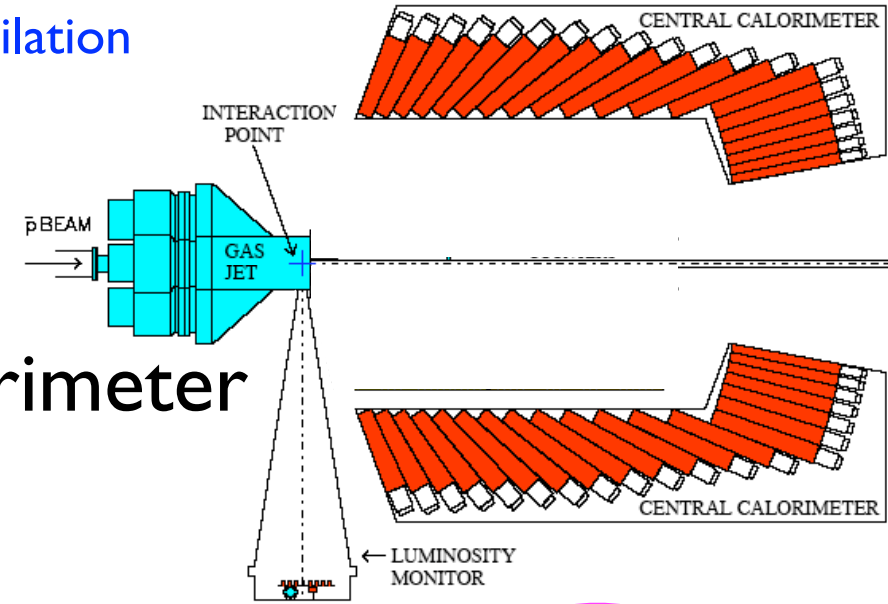

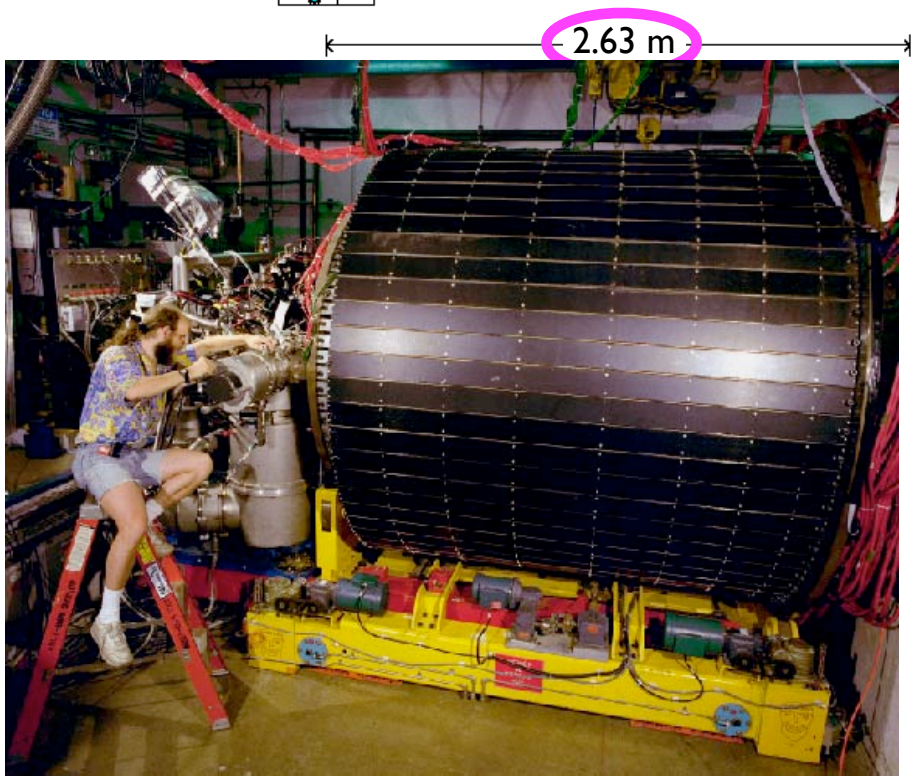

TAPAS

(The AntiProton Annihilation Spectrometer)

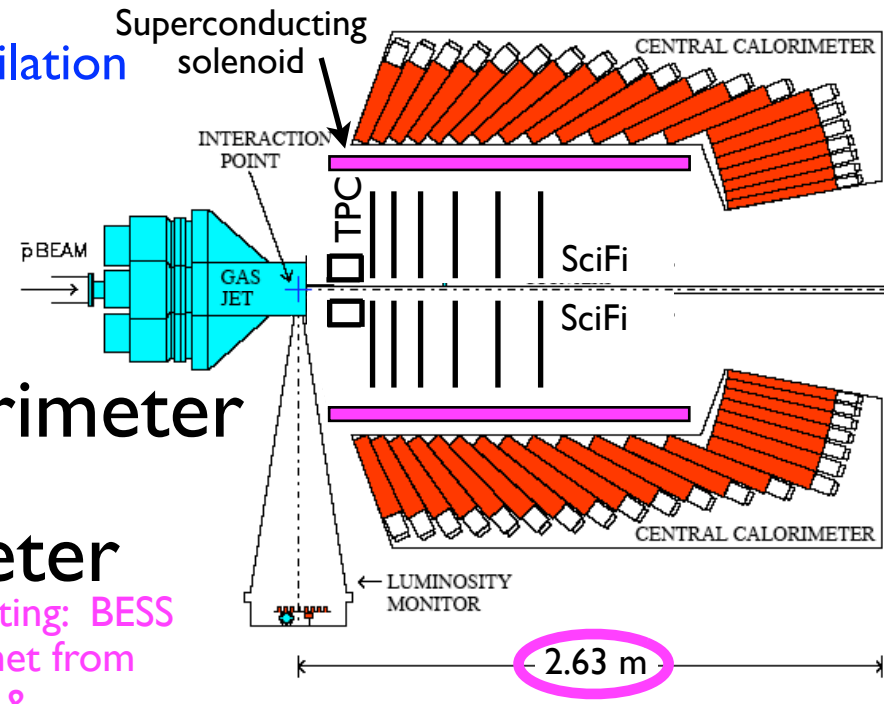

- Our proposal:
  - Reinstall E760/835 barrel calorimeter
  - Add small magnetic spectrometer

[Existing: BESS magnet from KEK & SciFi DAQ from DØ

TAPAS

(The AntiProton Annihilation Spectrometer)

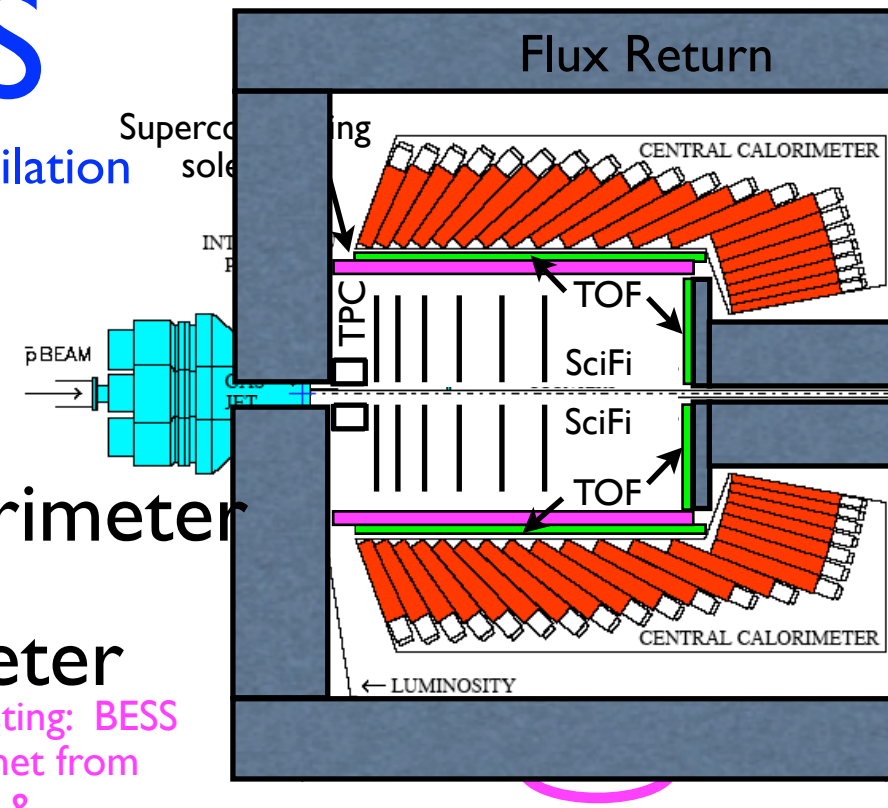

- Our proposal:
  - Reinstall E760/835 barrel calorimeter
  - Add small magnetic spectrometer
  - Add precision TOF system
  - Add thin targets
  - Add fast trigger & DAQ systems

[Existing: BESS magnet from KEK & SciFi DAQ from DØ & FNAL iron & CDF & DØ electronics]

[New: targets, TPC, fiber planes, TOF system]

- Take data at $\mathcal{L} = 2 \times 10^{32}\ \mathrm{cm}^{-2}\ \mathrm{s}^{-1}$

(charm, hyperons, *XYZ* plus many other topics...)

Cost Estimate

- TAPAS is *very* cost-effective:

Item	Cost (k$)	Contingency (k$)
Targets	430	160
Luminosity monitor	60	20
Scintillating-fiber tracking system	1,820	610
Time-of-Flight system	500	500
Triggering	1,390	460
Data acquisition system	490	153
Infrastructure	1,350	550
TOTALS	6,040*	2,450*

* Yet to be updated for TPC costs, etc.

- Thanks to: existing calorimeter, solenoid, SciFi readout system, trigger & DAQ electronics

Possible Schedule:

2012	Spectrometer & trigger/DAQ installation		~24 mo
2014	Spectrometer & trigger/DAQ debug w beam		~3 mo
	Measure $\sigma(D^*)$	8 GeV	~1 mo
	Find $X(3872)$	E scan	~1 mo
	Measure $\sigma(\Omega\bar{\Omega})$	$\Omega\bar{\Omega}$ thresh	~1 mo
	Charmonium study		~3 mo
	Install/debug TOF particle-ID upgrade		~3 mo
2015	Charm CPV/Drell–Yan run	8 GeV	~12 mo
2016	XYZ run / $g-2$ running starts	E scans	~12 mo
2017	Hyperon CPV run	$\Omega\bar{\Omega}$ / $\Xi\bar{\Xi}$	~12 mo
	Mu2e (and possible TAPAS upgrade)		

TBD based on σ meas'ts

Competition

- LHC*b* charm reach now well established:
  - 1.4×10^6 tagged $D^0 \to K^+K^-$ / 0.58 fb^{-1}
  - By 2016 they will have up to another $\approx 2\ \text{fb}^{-1} \Rightarrow$ a total of up to $\approx 8 \times 10^6$ tagged $D^0 \to K^+K^-$
  - may improve charm trigger efficiency modestly – another factor ≈ 1.5 in statistics?

  $\Longrightarrow \lesssim 1 \times 10^7$ tagged $D^0 \to K^+K^-$
- We estimate $0.3\text{–}3 \times 10^7$ *per year*
  - but our major strength will be systematic: low multiplicity, *CP*-symmetric initial state, no *B* background, cylindrically symmetric *B* field

Competition

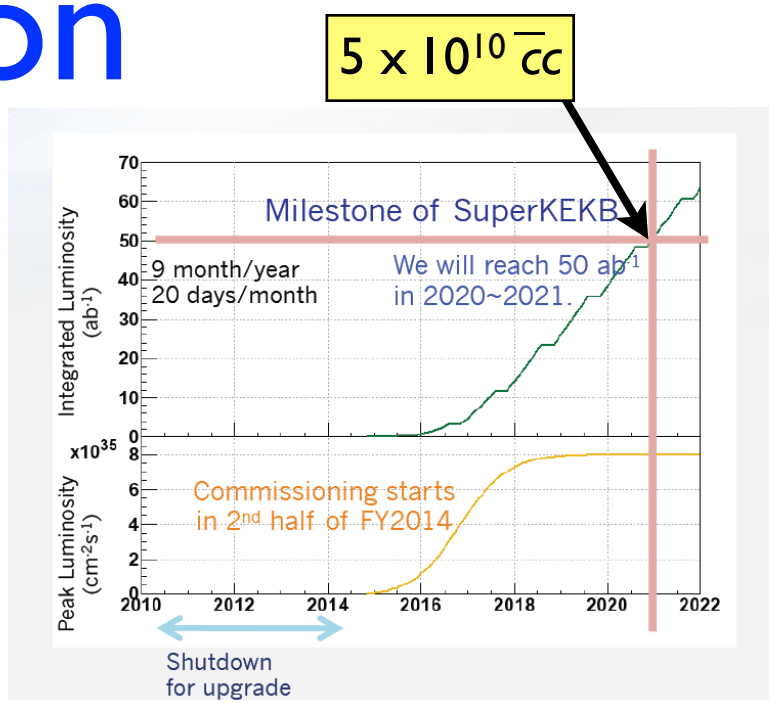

- Super B factories:
- Belle now has 1 ab^{-1} or 10^9 $\bar{c}c$
  - aiming for 50 ab^{-1} by 2021
  - competitive for D0 CPV with 10 ab^{-1}

$\Longrightarrow \gtrsim 2018$ ($\approx 2 \times 10^6$ tagged $D^0 \to K^+K^-$)

- This (8×10^{35} $cm^{-1}s^{-2}$) will not be easy and may not come as quickly as hoped
- Super-B: construction of tunnel and accelerator upgrade not yet started

Competition

- BES-III: Aiming for total of $\lesssim 10^8$ $\psi(3770)$

  $\Longrightarrow \lesssim 10^5\ D^0 \to K^+K^-$

  $\Longrightarrow$ Not competitive for D^0 CPV

- $\overline{\text{P}}$ANDA: No data before 2018
  - FAIR accelerator construction not yet started
    - clearing of land (tree cutting) only just commencing
  - once started, low luminosity for some years
    - potential synergies have led 2 $\overline{\text{P}}$ANDA groups so far (Genoa, Uppsala) to join TAPAS – more may yet join
    - we help $\overline{\text{P}}$ANDA by measuring bkgs & some signals, reduce their MC dependence, train exp'ced cohort

Compatibility

- Proton economics not a problem: TAPAS will use ≈ 2% of MI protons
- $g-2$: proposal to use Debuncher as π decay channel

  ⟹ Debuncher time-sharing feasible
  - we need Debuncher only ≈ 20% of the time
  - other solutions also possible, e.g., permanent-magnet π-decay channel in Tevatron tunnel
- Mu2e: proposal to use Debuncher as p buffer
  - we finish before Mu2e ready
  - or potential alternative scheme uses only Recycler*

* E. Prebys *et al.*, "Findings and Recommendations of the Mu2e Task Force," Nov. 7, 2011, http://mu2e-docdb.fnal.gov/cgi-bin/ShowDocument?docid=1911

Responses to Claimed P-986 Deficiencies

<u>Report of Nov. '10 PAC</u>:

1. "Physics case weak"
2. "Collaboration too weak"
3. "Detector construction project too big and complex"
4. "Incompatible with g – 2 and Mu2e"

Responses to Claimed P-986 Deficiencies

1. "Physics case weak"

- No – the physics case is strong
  - We have argued for many years crucial importance of charm and hyperon physics but few have paid heed
  - LHC*b* signal now shows that search for new physics *must* be comprehensive
    - mistaken strategy to try to "pick winners" when nature of new physics is unknown
  - In focusing purely on down sector, or meson sector, could miss crucial clues
  - Unique *XYZ* reach also important

Responses to Claimed P-986 Deficiencies

2. "Collaboration too weak"

- TAPAS is in fact a relatively small project and does not require hundreds of collaborators – 50 to 100 will suffice
- Since last year, we have succeeded in signing on 8 new collaborators from CEA Saclay, INFN Genoa, U Hawaii, Korea U, NIU, Uppsala U
  - fleshing out Drell–Yan physics reach is helping
  - some additional strong groups are interested & will most likely join if TAPAS encouraged

Responses to Claimed P-986 Deficiencies

3. "Detector construction project too big & complex"

- Major item is construction of SciFi tracker

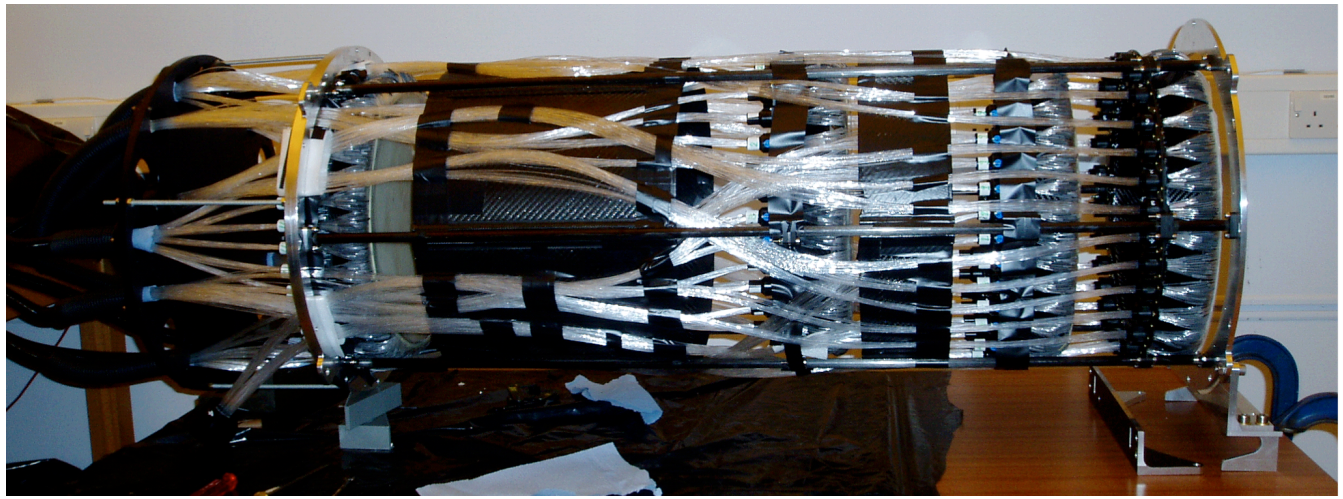

- We accomplished this in MICE in 2 years, with substantial R&D which need not be repeated
- Proposed work can be carried out in 2 years
- Construction (esp. TOF) can be staged if necessary

Responses to Claimed P-986 Deficiencies

4. "Incompatible with $g-2$ and Mu2e"

- We can share the Debuncher with $g-2$ at relatively modest cost
  - a bargain: $\gg$ double the physics, $\ll$ double the cost
- We can finish before Mu2e needs Debuncher
  - also potential Mu2e Recycler-only solution
  - Mu2e Task Force nevertheless recommended Recycler+Debuncher scheme to avoid $\approx$ a year of R&D
- Sufficient reason to sacrifice facility unique in the world?

Breadth of Program

- *Partial* list of physics papers/thesis topics:

General	
1	Particle multiplicities in medium-energy pbar-p collisions
2	Particle multiplicities in medium-energy pbar-N collisions
3	Total cross section for medium-energy pbar-p collisions
4	Total cross section for medium-energy pbar-N collisions
Charm	
5	Production of charm in medium-energy pbar-p collisions
6	Production of charm in medium-energy pbar-N collisions
7	A-dependence of charm production in medium-energy pbar-N collisions
8	Search for rare charm decay D0 --> e+ e-
9	Study of charm mixing via Dalitz-plot analysis of D0 --> K0 K+ K- decays
10	Measurement of D0 mixing in medium-energy pbar-N collisions
11	Search for/Observation of CP violation in D0 mixing
12	Search for/Observation of CP violation in D0 decays
13	Search for/Observation of CP violation in charged-D decays
Hyperons	
14	Production of Lambda hyperons in medium-energy pbar-p collisions
15	Production of Sigma0 in medium-energy pbar-p collisions
16	Production of Sigma- in medium-energy pbar-p collisions
17	Production of Xi- in medium-energy pbar-p collisions
18	Production of Xi0 in medium-energy pbar-p collisions

19	Production of Omega- in medium-energy pbar-p collisions
20	Production of Lambda Lambdabar pairs in medium-energy pbar-p collisions
21	Production of Sigma+ Sigmabar- pairs in medium-energy pbar-p collisions
22	Production of Xi- Xibar+ pairs in medium-energy pbar-p collisions
23	Production of Omega- Omegabar+ pairs in medium-energy pbar-p collisions
24	Rare decays of Sigma+
25	Rare decays of Xi-
26	Rare decays of Xi0
27	Rare decays of Omega-
28	Search for/Observation of CP violation in Omega- decay
Charmonium	
29	Production of X(3872) in medium-energy pbar-p collisions
30	Precision measurement of X(3872) mass, lineshape, and width
31	Decay modes of X(3872)
32	Limits on rare decays of X(3872)
33	Production of other XYZ states in medium-energy pbar-p collisions
34	Precision measurement of the eta_c mass, line shape and width
35	Precision measurement of the h_c mass, line shape and width
36	Precision measurement of the eta_c' mass, line shape and width
37	Complementary scans of J/psi and psi'
38	Precise determination of the chi_c COG
39	Production of J/psi and Chi_cJ in association with pseudoscalar meson(s)

- $\approx$ 50–100 PhD thesis topics
- By maintaining hadron physics at Fermilab, TAPAS could multiply Lab's physics output several-fold

… and if Nature is kind, make important discoveries as well!

Conclusions

- TAPAS can independently confirm and complement LHC*b* charm CPV indication long before super B factories will
  - The HEP world can't wait until ≈2020 for this.
- Along with other physics topics, can provide broad hadron-physics program at Fermilab — with important discovery reach — while new, big experiments under construction
  - Key to maintaining healthy Fermilab & US program.
  - The only proposed Fermilab experiment that can start before $g-2$ & Mu2e.
- We request scientific approval, so that detailed design optimization and construction planning can commence

Conclusions

- TAPAS can independently confirm and complement LHC*b* charm CPV indication long before super B factories will
  - The HEP world can't wait until ≈2020 for this.
- Along with other physics topics, can provide broad hadron-physics program at Fermilab — with important discovery reach — while new, big experiments under construction
  - Key to maintaining healthy Fermilab & US program.
  - The only proposed Fermilab experiment that can start before $g-2$ & Mu2e.
- We request scientific approval, so that detailed design optimization and construction planning can commence
- We have been doing experiments at Fermilab since ≈1972 – we <u>know</u> that (with our help) Fermilab can do this!