Status of BTeV

Talk to URA Visiting Committee
March 13, 2004
Joel Butler
Fermilab

Outline

- The Evolving Physics Case
- Recent Developments from Reviews Past
- Current Project Scope
  - C0 Outfitting
  - C0 Interaction Region
  - BTeV Detector
- Funding Status
- Technical Issues
  - Detector Layout and Key Design Features
  - Interaction region
  - Pixel Detector
- Test Beam Activities and Plans
- Reviews Upcoming
- Conclusion

The Evolving Physics Case

- Emphasis now is on New Physics (NP) Beyond the Standard Model (BSM)
  - Standard Model Constraints on CP violation and rare decays are very specific
  - There is a reasonable subset of decays that are theoretically clean I.e. negligible or manageable theoretical uncertainties
  - New Physics scenarios almost all have additional freedom in the flavor sector, such as new phases, that can modify the SM picture
- New Physics could be seen for the first time in B decays
- Or, what is now considered more likely, **as new physics is found at the Tevatron and LHC, the implications for B physics of various explanations can be worked out and looked for. B physics can help to resolve what many feel will be a complicated picture. B physics may permit one to eliminate some interpretations and to pin down the parameters of others. In particular, B physics is sensitive to new phases.**

Key Measurements of the CKM matrix in B Decays

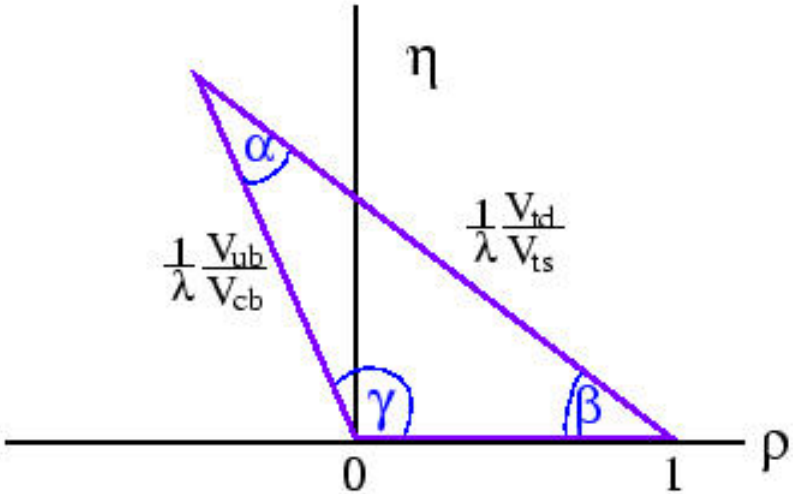

$$\chi = \arg\left(-\frac{V_{cs}^{*}V_{cb}}{V_{ts}^{*}V_{tb}}\right)$$

Physics Quantity	Decay Mode
$\sin(2\alpha)$	$B^o \to \rho\pi \to \pi^+\pi^-\pi^o$
$\cos(2\alpha)$	$B^o \to \rho\pi \to \pi^+\pi^-\pi^o$
$\mathrm{sign}(\sin(2\alpha))$	$B^o \to \rho\pi, B^o \to \pi^+\pi^-$
$\sin(\gamma)$	$B_s \to D_s K^-$
$\sin(\gamma)$	$B^+ \to D^o K^+$
$\sin(\gamma)$	$B \to K\pi$
$\sin(\gamma)$	$B \to \pi^+\pi^-, B_s \to K^+K^-$
$\sin(2\chi)$	$B_s \to J/\psi\eta', J/\psi\eta$
$\sin(2\beta)$	$B^o \to J/\psi K_s$
$\sin(2\beta)$	$B^o \to \phi K_s, \eta' K_s, J/\psi\phi$
$\cos(2\beta)$	$B^o \to J/\psi K^*, B_s \to J/\psi\phi$
x_s	$B_s \to D_s\pi^-$
$\Delta\Gamma$ for B_s	$B_s \to J/\psi\eta', K^+K^-, D_s\pi^-$

About 1/2 of the key measurements are in B_s decays. About 1/2 of the key measurements have π^o's or γ's in the final state!
BTeV addresses these issues.

This Year in Review

- P5

"P5 supports the construction of BTeV as an important project in the world-wide quark flavor physics area. Subject to constraints within the HEP budget, we strongly recommend an earlier BTeV construction profile and enhanced C0 optics."

- Office of Science 20-Year Facilities Report

Priority: 12 Near Term – Important, Ready

BTeV

What's New: BTeV will use state-of-the-art detector technologies and the very high particle production rates at Fermilab's Tevatron to obtain the large samples of B-particles needed to make the necessary measurements.

- DOE Critical Decision 0 (CD-0)

CD-0, Approve Mission Need
for the
BTeV Project
at Fermi National Accelerator Laboratory

"We were informed the BTeV CD-0 has been approved by Ray Orbach on Feb. 17"

Current Project Scope

- The lab has decided to place all parts of the preparation for BTeV under one project. This includes
  - **CO-Outfitting:** The modifications to the facility provided by the original C0 construction project to support a large scale collider experiment and high luminosity IR
  - **C0 Interaction Region:** The modifications/additions to the accelerator to achieve high luminosity collisions in the C0 Collision Hall In 2001, the IR was scaled back to reuse CDF or D0 components, which would have been an "operating scale" project but P5 recommended giving BTeV a high-performance "custom" IR to guarantee that it achieved adequate luminosity. This involves more design, more construction, more procurements, and more money.
  - **The BTeV Detector**

The Project Acquisition Process and Critical Decisions

We are here .
CD1 Lehman review
At end of April

- CD-0: Approve Mission need
- CD-1: Approve Preliminary Baseline Range
- CD-2: Approve Performance Baseline
- CD-3: Approve Start of Construction
- CD-4: Approve Start of Operations

Because we have had an R&D project, we HOPE to be able to get to CD-3 by sometime in mid FY'05

Cost and Funding Status

- The "cost range" according to CD0 is $190M-230M.
- Temple review estimate is $190M (FY'05).
- FY05 funding appears in the President's budget at the level of $10.25M
- The lab and DOE are working out the cost profile and the final cost will be based on the CD2/CD3 process

Key Design Features of BTeV

- A **dipole located ON the IR gives BTeV a spectrometer covering the forward antiproton rapidity region.**
- A precision vertex detector based on **planar pixel arrays**
- A **vertex trigger at Level I** which makes BTeV especially efficient for states that have only hadrons. The tracking system design has to be tied closely to the trigger design to achieve this.
- Strong particle identification based on a **Ring Imaging Cerenkov counter.** Many states emerge from background only if this capability exists. It enables use of charged kaon tagging.
- **A lead tungstate electromagnetic calorimeter for photon and π^0 reconstruction.**
- A very **high capacity data acquisition system** which frees us from making excessively restrictive choices at the trigger level

BTeV Detector

1.1 Vertex Detector, Toroid and Beam Pipe
1.2 Pixel Detector
1.3 RICH
1.4 EMCAL
1.5 Muon Detector
1.6 Forward Straw Tracker
1.7 Forward Microstrip tracker
1.8 Trigger
1.9 Data Acquisition
1.10 Integration

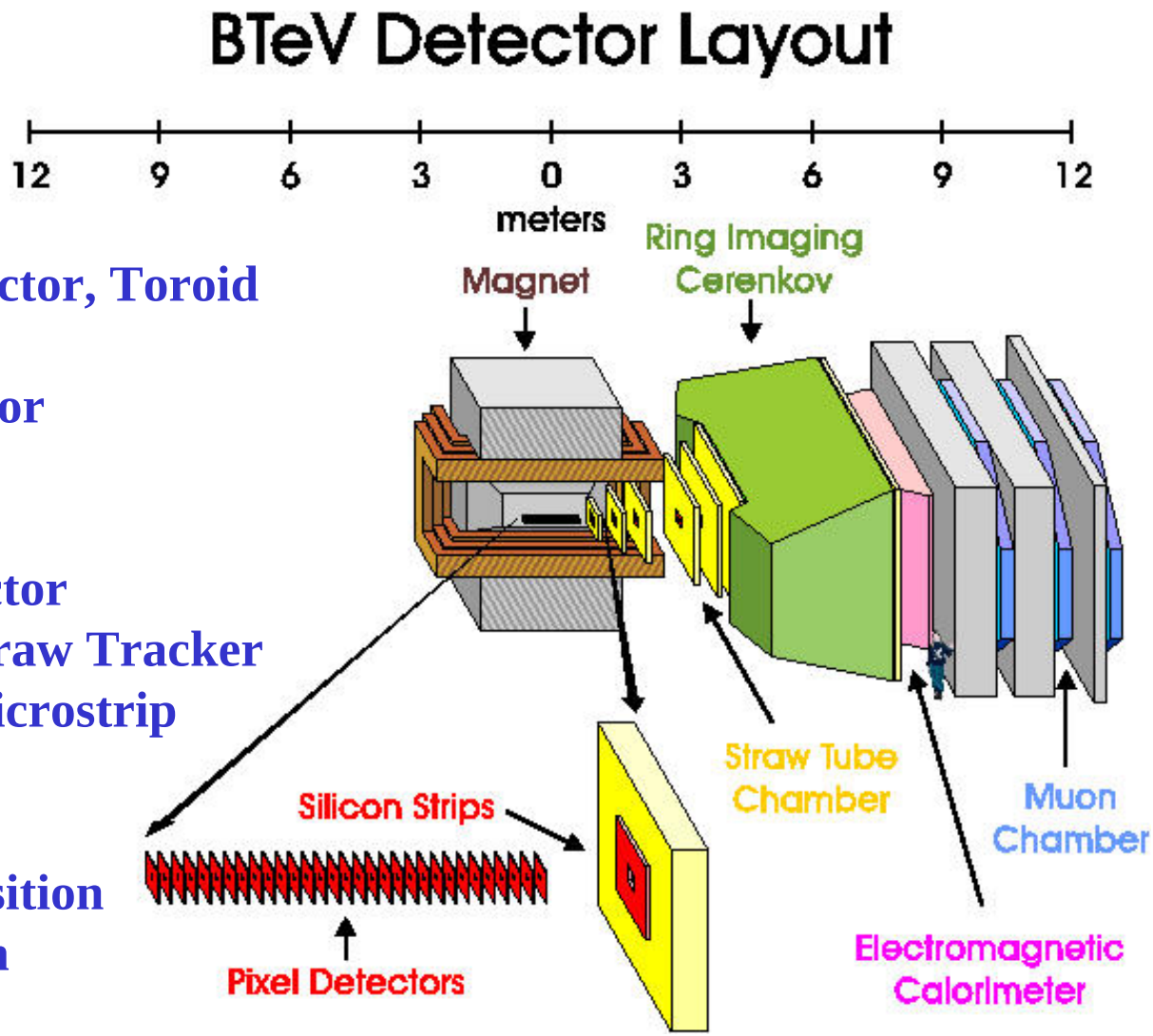

IR and C0: Current Status

- Mike Church, Accelerator Division,is in charge of IR subProject. Jim Kerby of the Technical Division is in charge of Magnet Production part.
- Tom Lackowski of FESS is in charge of C0 Outfitting
- Each project has proposed a proposed WBS and is working on a cost estimate and schedule
- Current Level of support in AD is ~4 FTE
  - Expected to increase by a few
- Current Level of support in TD is ~ 3.5 FTE
  - Expected to increase by a few
- A Conceptual Design Report have been completed
- Internal Review of the IR was held on Feb 18, 19

This design produces a β^* of 35 cm, same as at B0 and D0. BTeV luminosity will be the same as at B0/D0 when BTeV begins to run in 2009ish.

Results of Internal Review of the IR

- "A conceptual design report (CDR) for the BTeV Interaction Region (IR) has been written. This CDR sets forth the requirements for meeting these requirements. It presents the accelerator physics and beam optics design for the IR and addresses the conceptual design for the superconducting magnets and correctors, and cryogenic systems, vacuum systems, controls, and beam instrumentation required to support the new BTeV low beta interaction region. **The conceptual design is judged to be a reasonable basis for proceeding to the more detailed design for the IR."**
- **"The accelerator physics design has progressed to the stage that it can be "frozen" and considered the basis for component selection and component design decisions. Additional work on tracking is desirable"**

Design

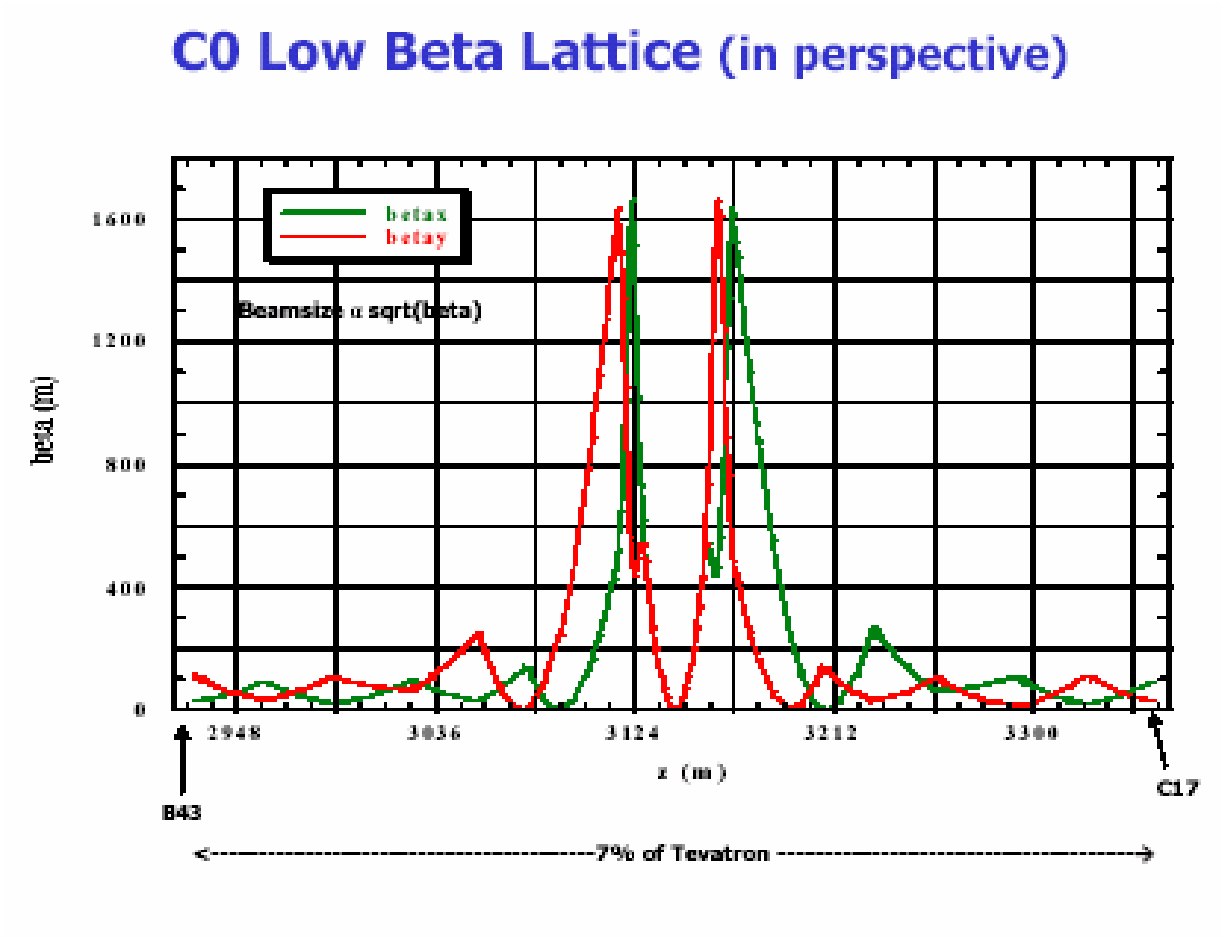

New development: β* now same as CDF/D0 (35cm) and not 50cm as before.

BTeV Low-Beta Quad

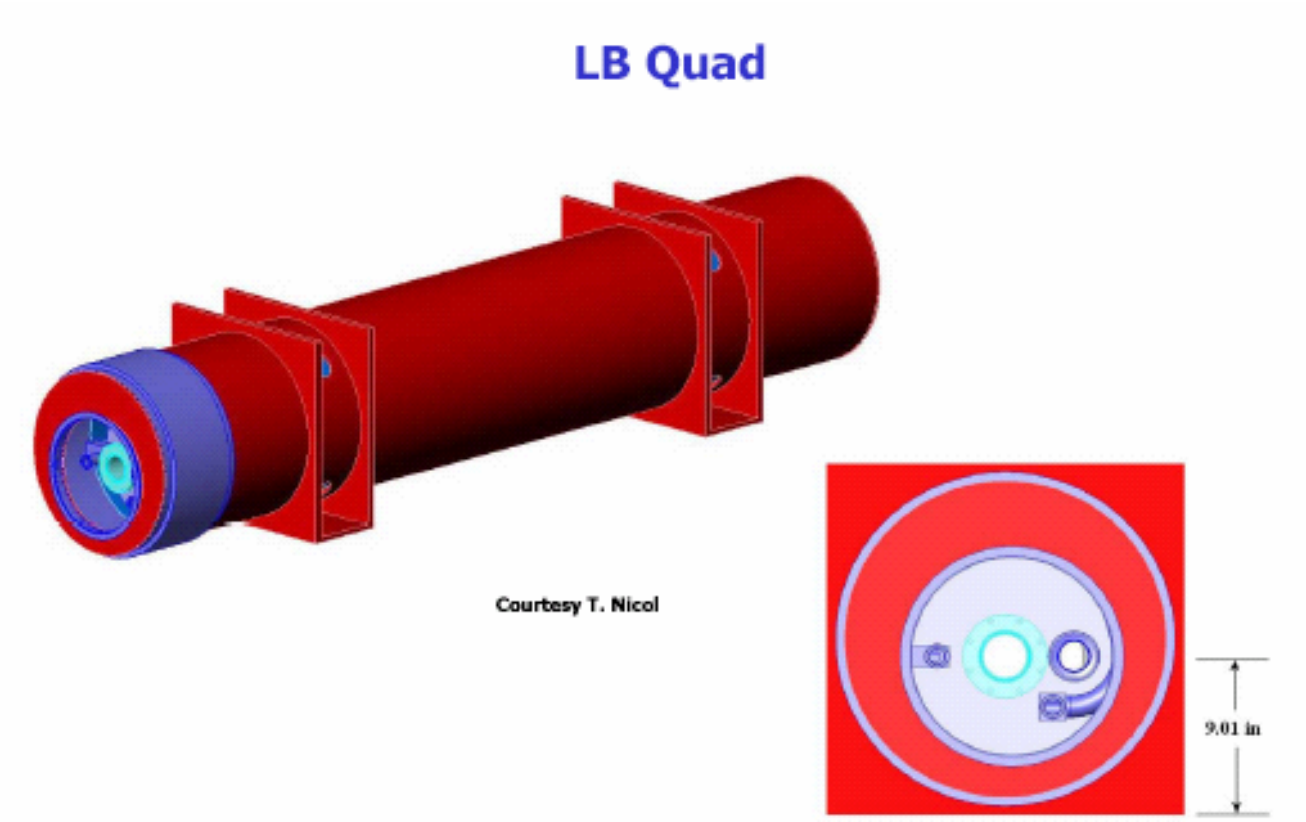

This is a conceptual design of the LHC Low Beta Quad. repackaged with a smaller cryostat so it fits in the TeV beam tunnel.

Pixel Detector Assembly

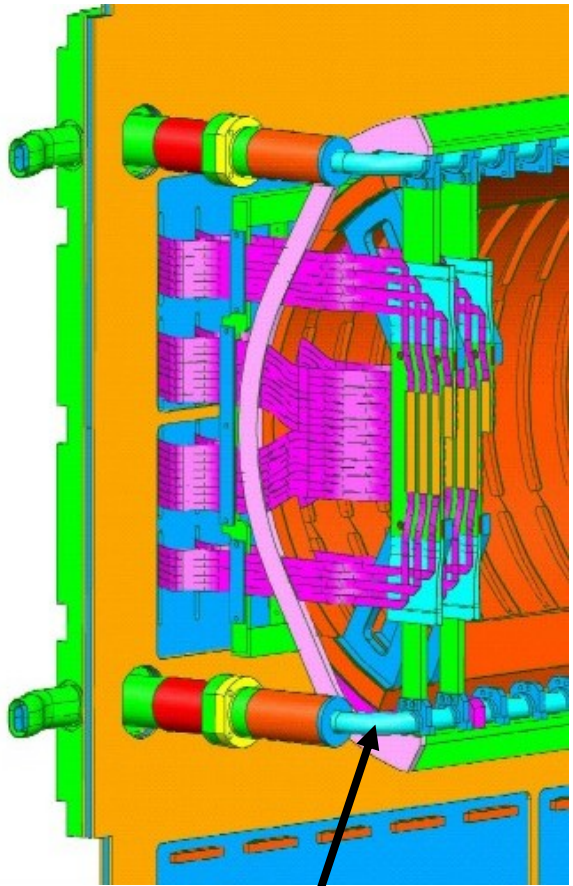

Stainless steel cooling pipes

- Detector placed inside the vacuum vessel
- Detector shielded from beam by RF shield
- Detector assembled in 2 halves

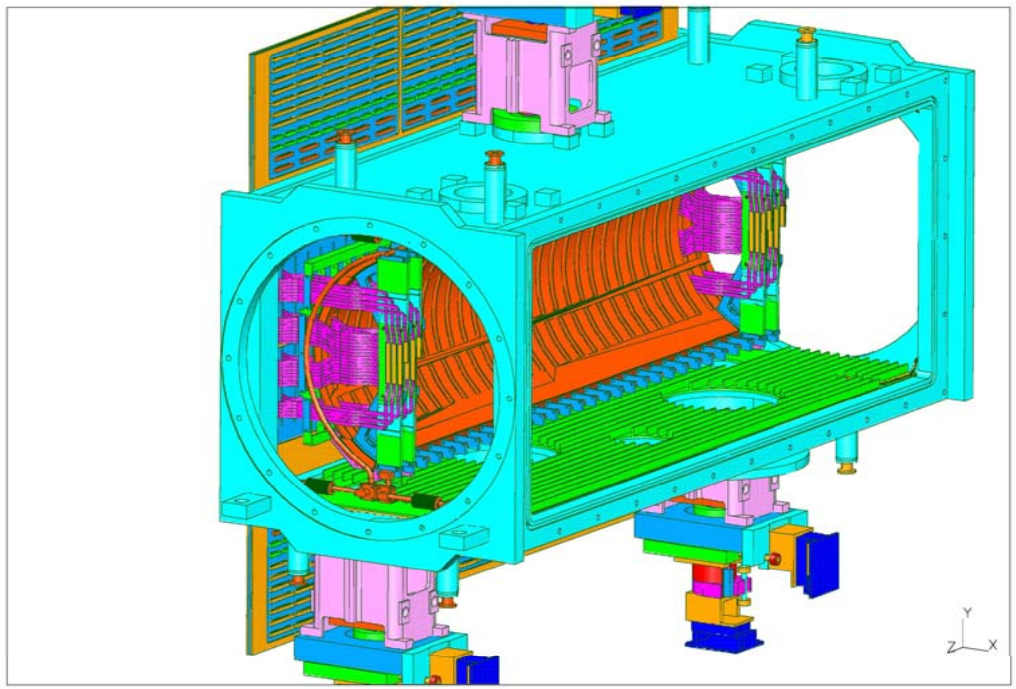

Half-station Configuration

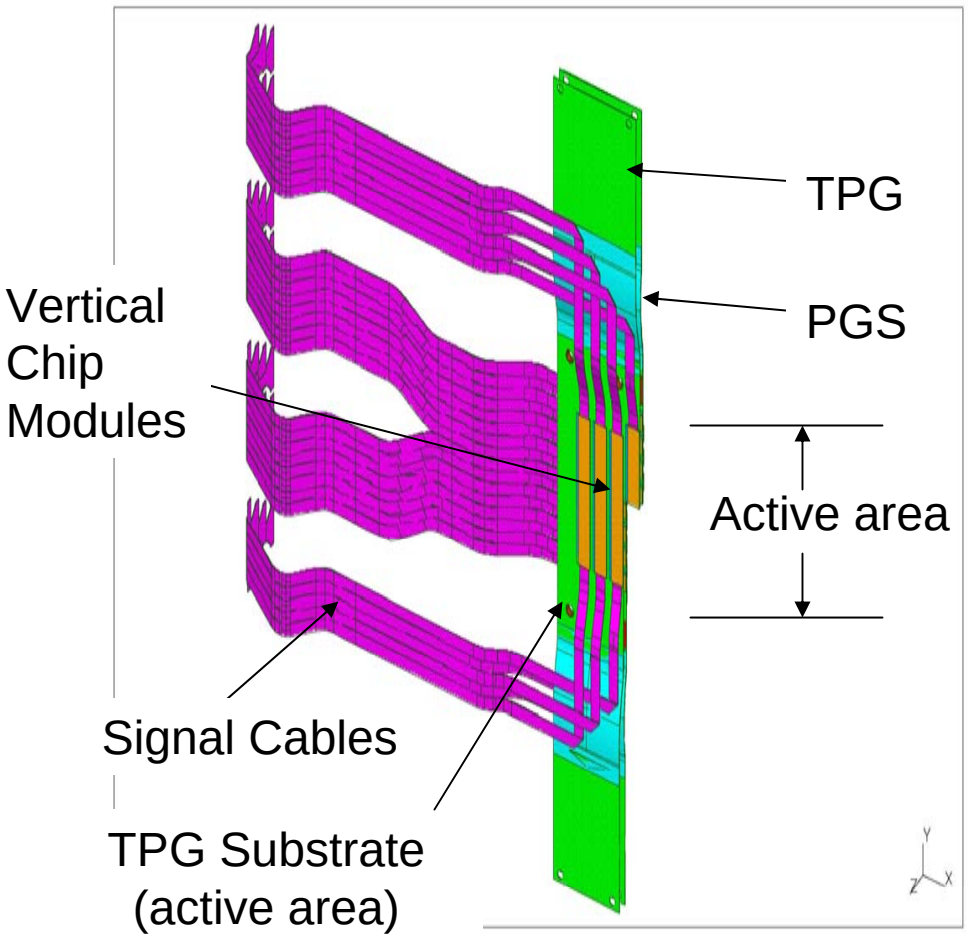

- Substrate is made up of Thermal Pyrolytic Graphite (TPG) & Pyrolytic Graphite Sheet (PGS)
  - Processed >1000°C
  - TPG 1700 W-m/K in-plane
  - PGS 600–800 W-m/K in-plane
- Material is minimized by using the higher thermal conductivity of TPG and PGS in combination with a large temperature gradient from the cooling tube to the active area
- Flexible PGS section provides compliance between the cooling tubes and the active area
- A heater in the active area maintains the average operating temperature from station to station independent of readout chip power.

5% Model Outgassing Test

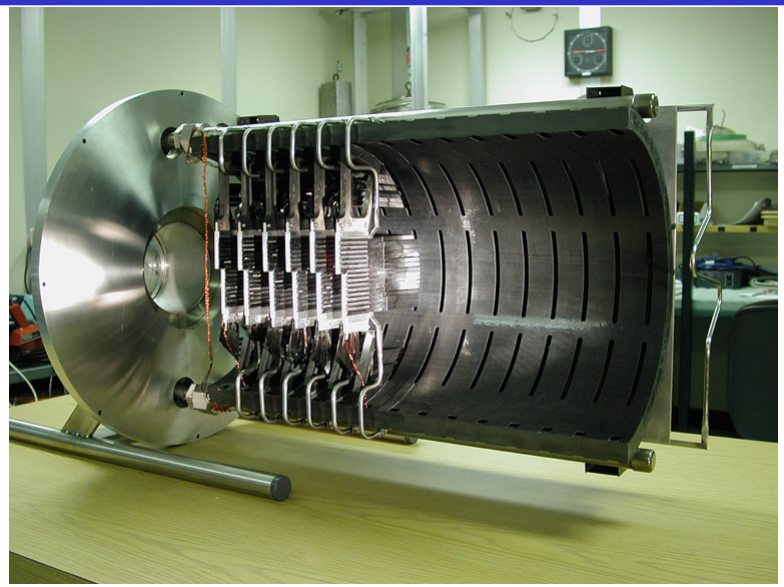

6 substrates with dummy modules (10% of pixel stations)

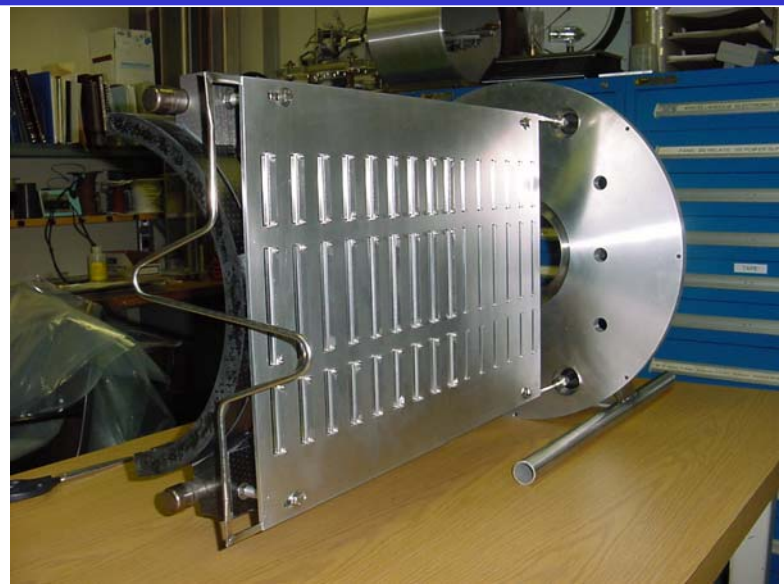

Cable support / Heat sink (10% of full scale)

- Model ~5% of detector components that contribute to outgassing
- Gas load measurement 5×10^{-4} torr-L/sec due to outgassing room temperature
- Majority of gas load is water
- ~1% of gas load is N_2
- Pressure 9×10^{-9} torr with heat sink –165°C, pixels at –10°C

BTeV R&D Highlights and Plans

- Pixel Detector: achieved design (5-10 micron) resolution in 1999 FNAL test beam run. Demonstrated radiation hardness in exposures at IUCF. **Will have a test of almost final sensor and readout chip in FNAL test-beam, MTEST, in 2004– starting this week.**
- Straw Detector: prototype built, **to be tested at FNAL in 2004, has already recorded tracks in MTEST.**
- **EMCAL: four runs at IHEP/Protvino demonstrated resolution and radiation hardness and verified stability of calibration system. We would eventually like to be doing some EMCAL beam tests at FNAL and are beginning to set up the equipment in MTEST now**
- RICH: HPD developed and tested. MAPMT is being bench tested. **Full test cell under development for beam test at FNAL in June of 2004 will permit direct comparison of HPD and MAPMT.**
- Muon system tested in 1999 FNAL test beam run. Better shielding from noise implemented and bench-tested. **Design to be finalized in FNAL test- beam in 2004 in April/May.**
- Silicon strip electrical and mechanical design well underway. **Prototype front end to be tested in summer/fall 2004**

Work supported by DOE/FNAL, DOE/University Program, NSF, INFN, IHEP, and others.

Test Beam

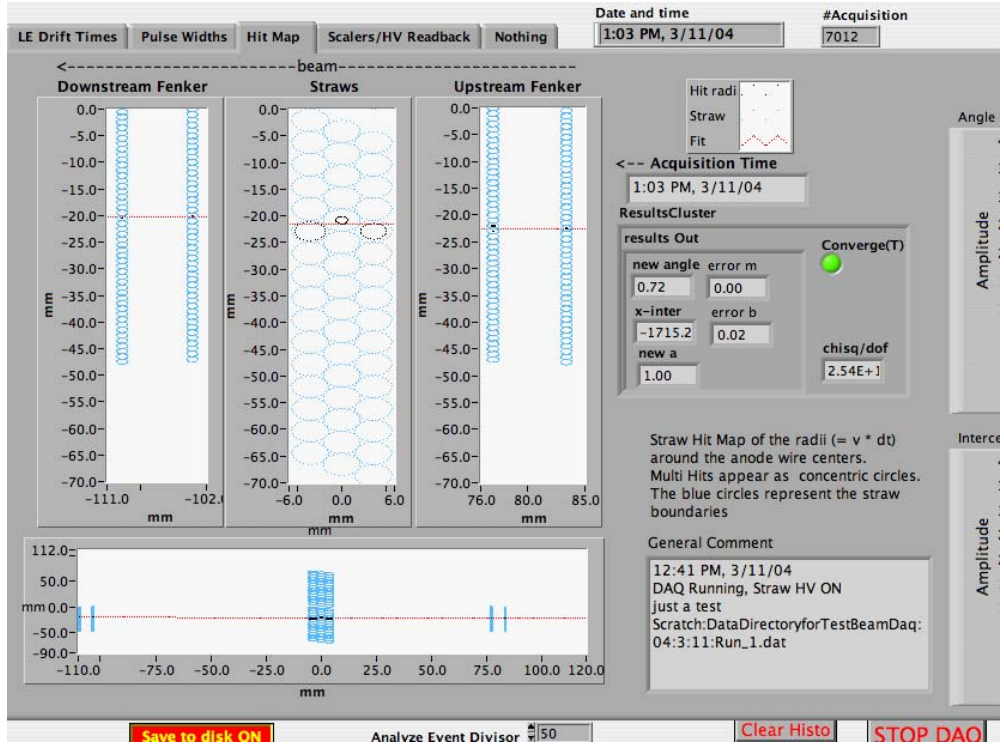

48 Straw module

Tracks recorded in
MT Slow Extracted Beam

Draft - BTeV Project Schedule for Critical Decisions & Reviews Timeline

Updated 17-December-03

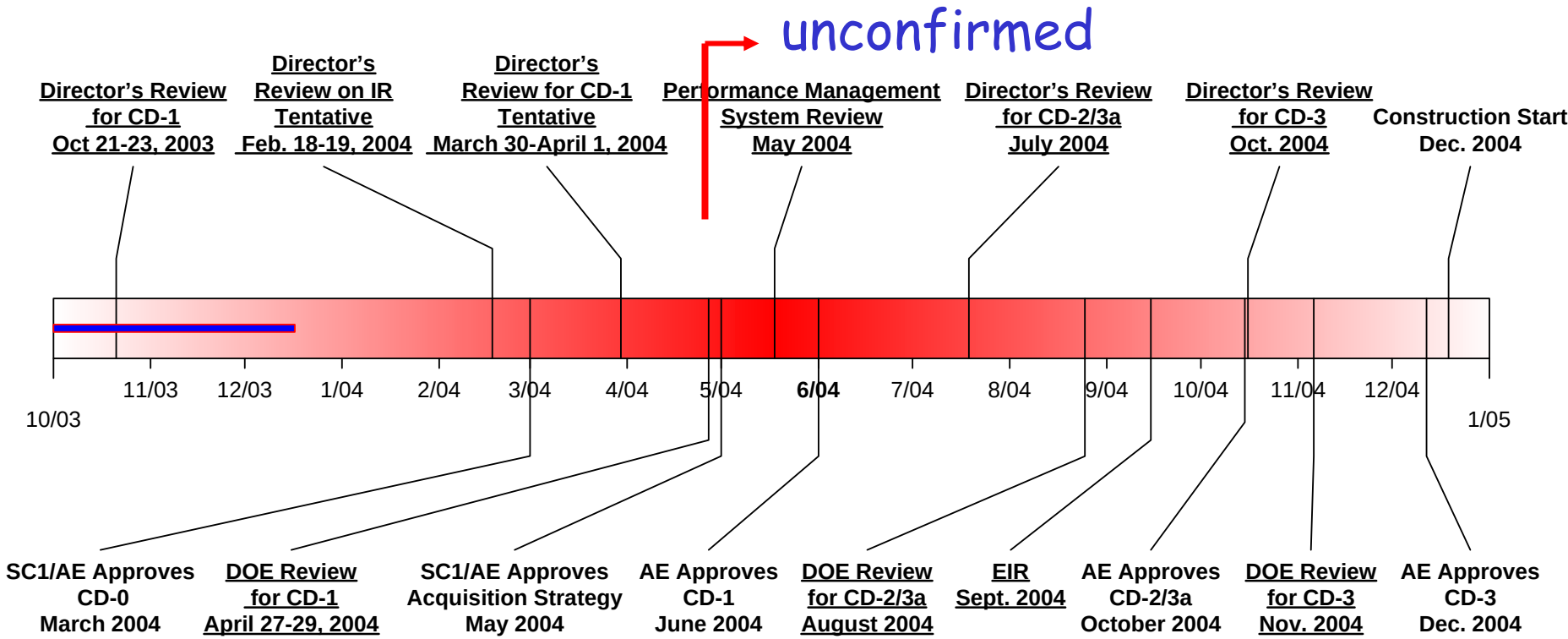

Reviews

- We got many good recommendations from the Temple 2003 review. We have drafted a response and action plan.
- The recent IR and C0 review completed the Temple '03 Conceptual Design (CD-1) review at the same level as for the detector. The concept and design of the IR was endorsed.
- A Lehman review for CD-1 is now scheduled for April 27-29. There will be another Temple review in March to prepare us. This is now our big focus.
- We will try to present the CD-1 review with a lot of CD-2 level material to get an assessment of where we are
- We always try to make the review process work for us and advance the project

Conclusions

- We will succeed in this round of reviews, finish the remaining R&D in '04, and get started on final design and construction in calendar '05.
- We are aware of the pressures the lab is under and continue to have enough priority from the lab so we can proceed. The BTeV group tries to also contribute to solving the lab's general problems wherever we can.
- BTeV is an experiment that can keep the domestic program engaged in TeV scale physics after the LHC turns on. It complements our involvement in the LHC program. It uses a machine in which we will have made a huge investment. It can do great physics and can do much for Fermilab.