The Dark Energy Camera (DECam) Project

Conceptual Design Report

Version 0.9
June 9, 2006

The Dark Energy Survey Collaboration

1 Introduction

1.1 The Science Context of the Dark Energy Survey

A critical research problem in cosmology is the drive to understand the observations of an accelerating expansion of the universe. In 1998 two independent teams studying very distant supernovae observed that Type 1a supernovae appeared dimmer than expected. This dimness could be explained by either evolution in the intrinsic luminosity of the supernovae or an acceleration of the universal expansion. The gravitational attraction of galaxies and their dark matter halos decelerates the expansion. Because we observe an acceleration instead, something new and strange is required: dark energy. Since then, independent lines of evidence for dark energy have been found.

The high precision measurements of the temperature fluctuations of the cosmic microwave background (CMB) made with the NASA Wilkinson Microwave Anisotropy Probe (WMAP) mission showed that the geometry of the universe is flat to within the errors of their measurements. A flat universe requires that the total energy density must be equal to a critical value. The Sloan Digital Sky Survey and WMAP have determined that the total matter density, the sum of the normal and dark matter densities, is equal to 30% of this critical value. The remaining 70% of the energy density is attributed to the unseen dark energy—in agreement with the supernova studies.

The dark energy could be a simple vacuum energy density (the "cosmological constant"), a new scalar field, a flaw in Einstein's general relativity or evidence that our world lies embedded in a much higher dimensionality universe. Any of these possibilities represent a major shift in our current understanding of the nature of matter, energy, space and time. However, to sort out the possibilities and pin down the nature of the dark energy, we will need more precise measurements of the dark energy equation of state parameter, w. We also need to determine whether the amount of dark energy in the universe has changed with time – that is, whether the equation of state should be described with both a constant and a time-dependent term. In order to make these measurements, new methods and new instruments are needed.

1.2 Overview of the Dark Energy Survey

The Dark Energy Survey (DES) is a new project aimed at measuring the dark energy equation of state parameter, w, to a statistical precision of ~5%, with four complementary techniques. The project proposes to build a new 3 sq. deg.instrument (DECam) to be mounted at the prime focus of the Blanco 4m telescope at the Cerro-Tololo International Observatory (CTIO). DECam includes a large mosaic camera, a five element optical corrector, four filters (g,r,i,z), and the associated infrastructure for operation in the prime focus cage. The focal plane consists of 62 2K x 4K CCD modules (0.27arcsecond/pixel) arranged in a hexagon inscribed within the 2.2 deg. diameter field of view. The project plans to use the 250 micron thick fully-depleted CCDs that have been developed at the

Lawrence Berkeley National Laboratory (LBNL) in order to obtain the best available quantum efficiency at red wavelengths. The construction of DECam is scheduled to finish in the first quarter of FY10, and the survey will take data from 2010-2014.

2 Scientific and Technical Requirements

[needs revision]
The science program of the DES consists of the four key projects: measurement of galaxy clusters as a function of redshift, weak lensing tomography, baryon acoustic oscillation measurement, and detection of Type Ia supernovae. More details on these measurements can be found in Section 5.2 and in Ref. xx. The program will be achieved by conducting a multicolor imaging survey in order to create a galaxy map to sufficiently faint levels with the following features:
a) redder wavelength sensitivity high enough to construct complete cluster catalogs from 0.2 <= z <= 1,
b) a point spread function small and stable enough to allow weak lensing measurements using ~200 million galaxies,
c) a photometric calibration precise enough to allow statistics limited angular correlation measurements for baryon oscillations,
d) time domain coverage sufficient to allow construction of well measured light curves for ~2000 supernovae over 0.2 <= z <= 0.75.
The science reach of the galaxy cluster measurement is greatly enhanced if the imaging survey overlaps with a CMB map with a resolution allowing the detection of the Sunayev-Zeldovich effect from clusters of galaxies over a sufficiently wide area of sky to permit statistically interesting constraints. The only such survey planned is that of the South Pole Telescope SZ survey.

The imaging survey design which permits this science program is:

I. A CCD survey of 5000 sq-degrees predominantly at Dec <= -30
II. Obtained over 5 years using 30% of the available Blanco 4m time,
III. With an image quality of <~ 1" FWHM
IV. In 4 bands to g,r,i,z = 24, 24, 24, 23.6 for faint galaxies in 1.5" apertures, and
V. Photometric redshifts for complete samples of galaxies to a density of roughly 20/sq-arcminute

The associated time domain survey design is:

I. A CCD survey of 40 sq-degrees in 13 fields sampled every 3 nights in r and every 6 nights in i and z

The limiting magnitudes are derived from detailed survey simulations that incorporate weather and seeing data at CTIO over a 30-year baseline. We adopted a median delivered seeing of 0.9" FWHM based on the seeing measured with the existing camera on the Blanco over a 5 year baseline, although with the improvements to the telescope-instrument combination as described in Section 3.3, we expect better seeing during the DES observations.

The required survey area and depth combined with the telescope aperture and time availability directly motivate the scale of the camera and the choice of the full depletion LBNL CCDs.

The science requirements are laid out more fully in the survey Science Requirements Document. Here, we summarize them briefly.

1) Image the survey area twice per filter per year, with a 10% time domain survey.
2) Measure photometric redshifts for clusters, red galaxies, and blue galaxies with respective precisions of delta-z – 0.01, 0.03, 0.20, out to z = 1, with well-understood error distributions.
3) Achieve limiting magnitudes in g,r,i,z of 24,24,24,23.6 for small galazies.
4) Achieve a point-spread function (PSF) or FWHM <= 1.1 arcsecond, and a median < 0.9 arcsecond, which is stable over 10sq-arcminute areas.
5) Obtain the photometric calibration to a precision of 2% with well-understood system response curves.
6) Obtain the astrometric calibration to 0.1 arcsecond.
7) Achieve image remapping that conserves flux and is practically distortion free.
8) Populate a galaxy catalog with measurements that allow straightforward selection function calculation and simulation.
9) Populate a subtraction catalog with reliable detections of variable objects.
10) Provide collaboration scientists with easy and high-availability access to survey data.

3 Description of the DECam Project

3.1 Site Selection

The DECam Project is a specific answer to an announcement of opportunity for an instrument to be placed on the Blanco 4m telescope, which is an existing facility of the Cerro Tololo Inter-American Observatory in Chile, site selection is not an issue for the DECam project. No other existing 4m telescope with comparable seeing, and offering the considerable advantage of overlap in available survey volume with the South Pole Telescope's survey, is available for this work

The V. M. Blanco 4-m telescope is sited at Cerro Tololo Inter-American Observatory – one of the world's premier observing sites. It is a wide-field Ritchey-Chrétien design; its f/2.7 prime focus has been exploited over the past two decades with a series of wide field CCD imagers and optical correctors – the combination of which has made the facility the southern hemisphere's (and at times the world's) leader in optical imaging as gauged by the metric $\varepsilon A\Omega$ (efficiency × aperture × detector area). The critical observations leading to the discovery of dark energy were made with this telescope, and several other important surveys have been completed or are underway using the prime focus 8K×8K Mosaic II Imager.

Deleted: , the

At the time of its construction 30 years ago, the quality of the Blanco telescope primary mirror defined the state of the art and the surface quality has only been exceeded in the last decade with the advent of super-polishing. The enclosed energy as a function of diameter as measured during the testing of the Blanco primary at the time of its acceptance is given below:

Deleted: its

Enclosed Energy	Diameter in arcsec
57%	0.15
80%	0.25
94%	0.40
99%	0.50

The Cerro Tololo observing site has a median image quality of 0.65 arc seconds. The site seeing together with the primary mirror quality will allow the Blanco together with DECam to deliver excellent quality images, limited primarily by atmospheric seeing.

3.2 DECam Conceptual Design

We have developed a Conceptual design for DECam that requires only modest development of proven technologies with the goal of minimizing the construction time and costs while maximizing the scientific potential. Table 1 contains a summary of the DES survey parameters and the expected performance of the CTIO site and DECam. Figure 1 shows a cross section of DECam and a picture of the Blanco telescope. DECam will replace the entire prime focus cage of the Blanco and attach to the existing spider support fins. The major components of DECam are a 520 megapixel optical CCD camera with vacuum and cryogenic controls, a compact low noise CCD readout system housed in actively cooled crates, a combination shutter-filter system to house the shutter, the four DES filters (g,r,i,z) plus slots for two additional filters that could be provided by the observer community, and a wide-field optical corrector (2.2 deg. field of view). The CCD vessel and corrector are supported as a single unit by a 6x6 hexapod that will provide lateral adjustability as well as focus control. Note that the prime focus cage of the Blanco can flip such that the F/8 mirror that is mounted to the back of the cage, behind the CCD vessel, points towards the primary mirror for Cassegrain observations. DES will maintain this capability by attaching the existing F/8 mirror to the back of the new DES prime focus cage.

The DES survey strategy is based on taking multiple short exposures (100 - 400 sec) and adding them together to reach the required depth in each filter pass-band. This strategy minimizes the systematic uncertainties resulting from effects such as atmospheric variations. In first two years we plan to tile the entire survey area multiple times to enable early scientific results. To maximize the total time available for exposures, we plan to read out the image CCDs while the telescope is slewing to a new position. Current measurements indicate that the time it takes for a typical DES slew of 2 deg. is ~35 sec. Upgrades planned by CTIO for the telescope control system[i] discussed in section XXX will likely reduce this to ~ 20 sec. A CCD readout rate of 250 kpix/sec will take 17 sec and fit within the telescope slew time.

Table 1 Expected performance of DECAM, Blanco, and CTIO site

Blanco Effective Aperture/ f number @ prime focus	4 m/ 2.7
Blanco Primary Mirror - 80% encircled energy	0.25 arcsec
Optical Corrector Field of View	2.2 deg.
Corrector Wavelength Sensitivity	<350-1000 nm
Filters	SDSS g, r, i, z (400-1000 nm)
Effective Area of CCD Focal Plane	3.0 sq. deg.
Image CCD pixel format/ total # pixels	2K X 4K/ 520 Mpix
Guide, Focus & Alignment Sensor CCD pixel format	2K X 2K
Pixel Size	0.27 arcsec/ 15 μm
Readout Speed/Noise requirement	250 kpix/sec/ 10 e
Survey Area SPT overlap SDSS stripe 82 Connection region	5,000 sq. deg. total RA -60 to 105, DEC -30 to -65 RA -75 to -60 , DEC -45 to -65 RA -50 to 50, Dec -1 to 1 RA 20 to 50, Dec -30 to -1
Survey Time/Duration	525/5 (nights/years)
Median Site Seeing Sept. – Feb.	0.65 arcsec
Median Delivered Seeing with Mosaic II on the Blanco	0.9-1.0 arcsec (V band)
Limiting Magnitude: 10σ in 1.5" aperture assuming 0.9" seeing, AB system	g=24.6, r=24.1, i=24.3, z=23.9
Limiting Magnitude: 5σ for point sources assuming 0.9" seeing , AB system	g=26.1,r=25.6, i=25.8, z=25.4

We plan to read out the alignment and focus CCDs with the image CCDs to provide the possibility for image by image corrections. Currently at the Blanco, observations are interrupted 2-3 times/night to correct the telescope focus and the corrector-primary mirror alignment is checked and adjusted every few months. Experience with DECam on the Blanco will determine the frequency at which corrections are needed to maintain the best image quality. The guide CCDs need to provide signals to the telescope controls system at a rate of ~ 1 Hz. To achieve this rate, exposures of ~ 0.5 sec are envisioned and only a small area centered on the guide star will be read out.

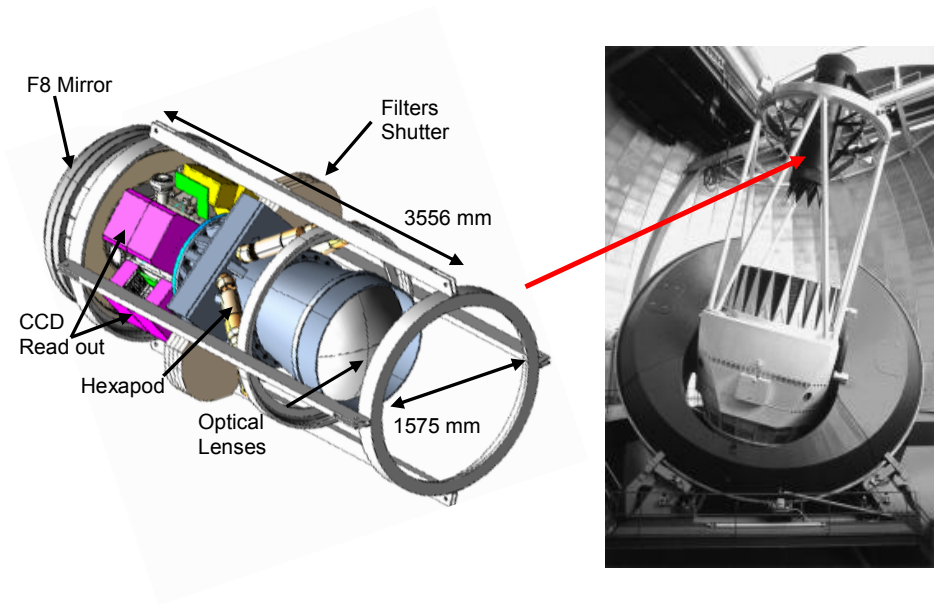

Figure 1 Isometric view of the DECam, the DES prime focus instrument with a picture of the Blanco telescope.

3.2.1 CCDs and Focal Plane

To efficiently obtain *z*-band images for high-redshift (z~1.3) galaxies, we have selected the fully depleted, high-resistivity, 250 micron thick CCDs[ii] that have been designed and developed at the Lawrence Berkeley National Laboratory (LBNL). The thickness of the LBNL design has two important implications for DES: fringing is eliminated, and the quantum efficiency (QE) of these devices is > 50% in the *z* band, a factor of 5-10 higher than traditional thinned astronomical devices. Figure 2 shows the QE of the LBNL CCDs compared to the CCDs currently in the Mosaic II camera on the Blanco. Several of the LBNL 2k x 4k CCDs of this design have been successfully used on telescopes, including the Mayall 4m at Kitt Peak and the Shane 3m at Lick Observatory.

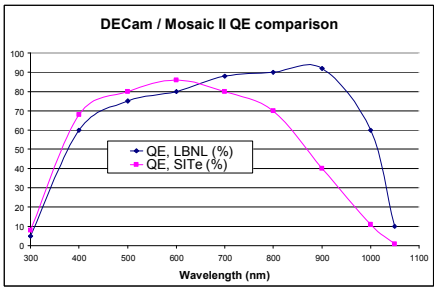

Figure 2 Quantum Efficiency of the LBNL CCDs and the CCDs in Mosaic II

LBNL developed this CCD design in its MicroSystems Lab processing facility on 4" wafers. For DES we have chosen to follow the CCD acquisition model that has been developed by LBNL for the SNAP devices. In this model, the wafer vendor performs the first 8 steps in the CCD processing on 650 micron thick 6" diameter wafers. The wafers are then delivered to LBNL for thinning to 250 microns and the final three process steps. For DES a new wafer layout, shown in Figure 3, containing four 2kx4k devices on a single 6" wafer was required to keep the processing costs to a minimum (previous wafer layouts had only two 2kx4k devices per wafer). The DES wafer layout also incorporates a 2kx2k device and eight 0.5x1k devices. The DES focal plane, also shown in Figure 3, will consist of sixty-two 2K x 4K CCDs (0.27"/pixel) arranged in a hexagon covering an imaging area of 3 sq. degrees. Smaller format CCDs for guiding (G), focusing (F) and alignment (WF) are located at the edges of the focal plane.

The wafer layout was completed in the spring of 2005 and the first devices from the DES wafers were delivered to LBNL in the summer of 2005. The 2kx4k devices on the fully processed wafers are tested on a cold probe station at LBNL, then shipped out for dicing and delivery to Fermilab. The first 5 wafers of fully processed 250 micron thick devices arrived at Fermilab in November 2005 and an additional 4 wafers arrived in Feb. 2006. These engineering grade devices are being characterized and used for development of the packaging and testing procedures. They have also proved useful for optimizing the processing procedures at the wafer vendor and LBNL. Table 2 shows the DES CCD performance requirements along with the results that LBNL achieved using devices of the same design. The preliminary characterization of the DES CCDs at Fermilab is discussed below and in Reference [iii]. The first science grade DES devices are expected in Oct. 2006. The preliminary estimate of the yield for science grade devices is 25% based on an LBNL study of devices procured with this business model for SNAP.

Table 2 DES CCD Specifications

	LBNL CCD performance	DECam Requirements
Pixel array	2048 × 4096 pixels	2048 × 4096 pixels
Pixel size	15 μm × 15 μm	15 μm × 15 μm (nominal)
<QE (400-700 nm)>	~70%	>60%
<QE (700-900 nm)>	~90%	>80%
<QE (900-1000 nm)>	~60%	>50% at 1000 nm
Full well capacity	170,000 e^-	>130,000 e^-
Dark current	2 e^-/hr/pixel at –150°C	<~25 e^-/hr/pixel
Persistence	Erase mechanism	Erase mechanism
Read noise	7 e^- @ 250 kpixel/s	< 10 e^- @ 250kpix/s
Charge Transfer Inefficiency	$< 10^{-6}$	$<10^{-5}$
Charge diffusion	8 μm	< 7 μm
Linearity	Better than 1%	1%
Package Flatness	< 10 microns	< 10 microns

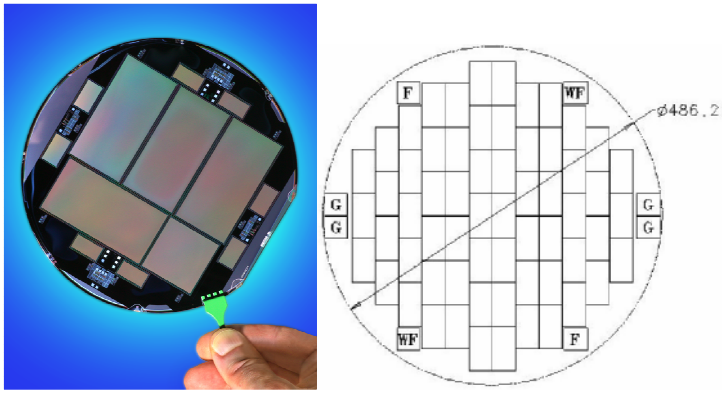

Figure 3 A wafer of DES CCDs showing the 2kx4k, 2kx2k and small test CCDs. The DES Focal plane is shown on the right.

The DES CCDs will be packaged and tested at Fermilab, capitalizing on the experience and infrastructure associated with construction of silicon strip detectors for the Fermilab Tevatron program. Early packaging effort has emphasized construction of simple pictureframe-style modules. Six different pictureframe types have been assembled, allowing the testing of three different CCD sizes in either front- or back-side illuminated configurations. Figure 4 shows all six pictureframe types. The window opening sizes and trace layouts correspond to the three different sensor sizes.

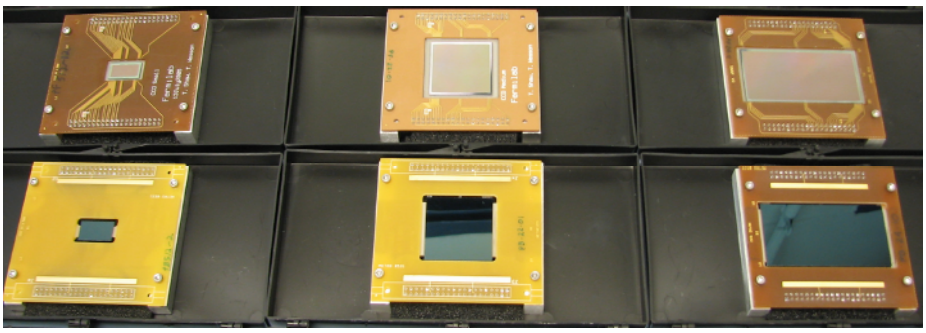

Figure 4 Six different pictureframe package types are shown. The upper row is front side illuminated, the bottom row is backside illuminated.

The CCDs are held in place in the window opening by an aluminum nitride (AlN) ceramic support piece that is epoxied to the pictureframe board. AlN is a good match to silicon in thermal expansion coefficient and minimizes thermally induced distortions. As of April 2006, a total of 68 pictureframe modules have been constructed. These devices have been extremely useful for gaining experience with CCD handling and packaging and for development of the CCD testing facillity.

The CCDs in the DES focal plane will be assembled into a 4-side buttable package, called the pedestal package. The initial version of the pedestal package for the 2k x 4k

devices builds on techniques developed by LBNL and Lick Observatory. Design of the packages for the guide and focus CCDs will follow the 2k x 4k development.

The pedestal package consists of 4 main parts as shown in Figure 5. The CCD itself is oriented with its backside, which has an antireflective coating, towards the incoming light. This face must be flat and have a uniform height relative to the modules mounting surface. Specifically, the pedestal package specifications are that each CCD module have a flatness on 1 sq.cm scales < 3 microns and adjacent 1 sqcm areas < 10 microns. All the CCD surfaces are required to be within 25 microns of the mean focal plane. Careful matching of the thermal expansion coefficients is required to achieve this level of flatness when the CCD modules are cooled to an operating temperature between -100 and -150 deg.C. A confocal chromatic inspection system has been developed to precisely measure flatness over a grid up to 300 x 300mm. Reference [iv] describes the details of the CCD packaging procedures and flatness measurements. As of June 1, 2006, 3 pedestal packages have been constructed and one device has been fully measured at -121 deg. C. The fine-grid flatness measurements of this device indicate that it has deviations of ~ 15 microns peak to peak and does not meet the specification. Construction and measurements of additional modules are in progress and improvements to the design are being investigated.

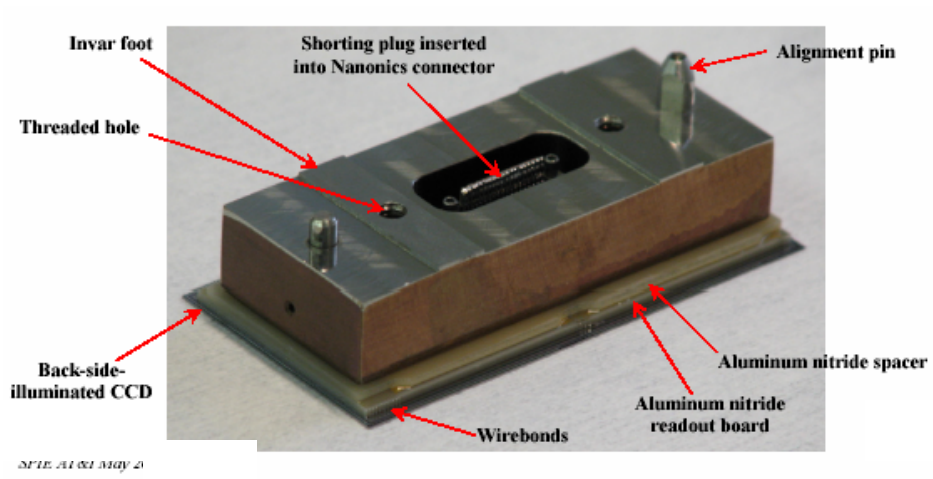

Figure 5 A complete pedestal package showing the CCD, the AlN readout board, the AlN spacer and the Invar foot. A 37 pin Nanonics connector is located in the center of the device and is accessed through a hole in the foot. A temporary shorting plug is inserted into the connector.

Due to the large number of devices that will need to be packaged and tested, an emphasis on ease of assembly and handling is incorporated into the design. Once a module is complete, it is removed from the gluing fixture and transferred to a storage box as shown in Figure 6. In order to minimize device handling, the storage box design allows testing without removal of the CCD. The box interfaces directly with the testing dewar and allows access on the underside to the module's connector. After cabling the module and

fastening the box to the test dewar coldfinger, the box cover is removed and the vessel is sealed.

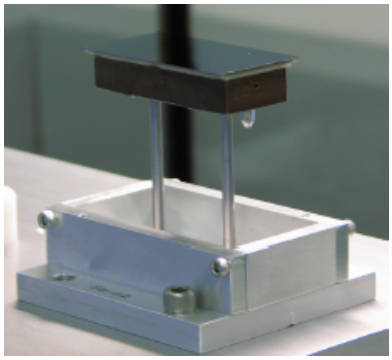

Figure 6 Module installation into a storage box

3.2.2 CCD Characterization

CCD testing and characterization is currently being performed at Fermilab using the Monsoon readout system[v] developed by NOAO. The characterization of the CCDs at LBNL used a Leach controller and we have also setup a similar system at Fermilab to provide cross checks and comparisons of performance. In March 2006 we achieved 6.5e noise operations with the Monsoon system and a DES CCD at a readout speed of 160 kpix/sec.

We have designed and carried out tests on DES CCDs for all of the specifications listed in Table 2. The test equipment includes three small vacuum dewars that allow us to cool CCDs to their operating temperatures; optical equipment including light sources, filters and shutters; and two Monsoon crates and a Leach controller, with controls software for automatic sequencing of test procedures, for readout. Figure 7 shows the photon light curve: the number of ADC counts versus exposure time using a flat-field white-light source. This test allows us to calculate the CCD linearity and well-depth, and count the number of hot or dead pixels. Figure 8 shows the photon transfer curve, from which we extract the gain. Figure 9 shows the relative quantum efficiency (QE) for a DES CCD, as measured at Fermilab, in comparison with measurements of a similar 250-micron thick, backside illuminated CCD at LBNL. We see that the key feature, that of high quantum efficiency at 1000 nm, is evident and that the results are in qualitative agreement at all wavelengths. Other tests allow us to optimize the clock and bias voltages, calculate the charge transfer inefficiency (CTI), and measure the charge diffusion. See Ref. [Estrada] for more detail.

Figure 7 (Below) The mean number of ADC counts in a DES CCD versus the length of time of a flat field exposure and the deviation from linearity from the same.

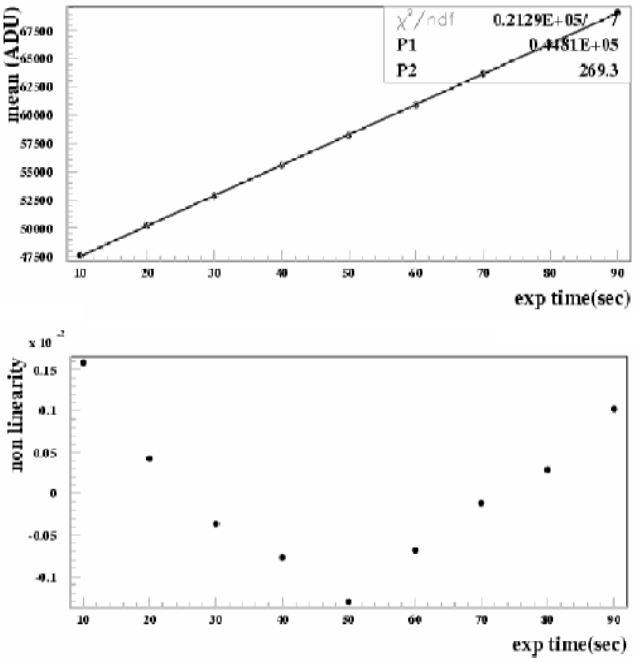

Figure 8 Photon Transfer Curve (below) of a 250 micron, backside illuminated DES CCD. The photon transfer curve shows the variance as a function of the mean, obtained by taking a series of exposures of increasing time length. The slope of this curve is the gain, in units electrons per ASU.

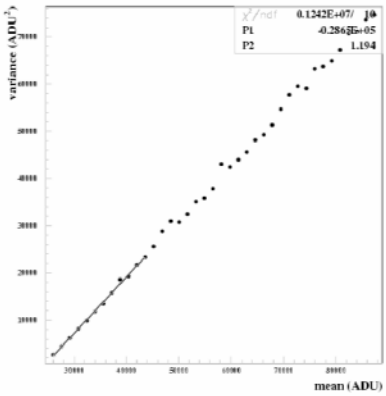

Figure 9. (Below) Relative Quantum Efficiency vs. wavelength for two DES CCDs. The green circles are the measurements made on a 250 micron thick, backside illuminated CCD similar to the DES type. The blue crosses are measurements, made at Fermilab, at five different sub-surfaces of a DES CCD. The wavelength units are nm.

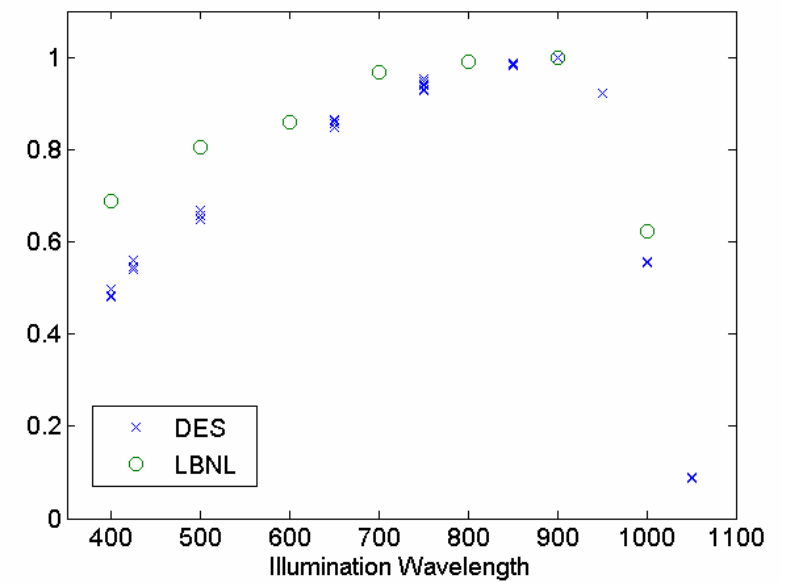

Before the wafers are diced and shipped to Fermilab, LBNL performs detailed cold probe testing of the 2kx4k devices at a temperature of -65 C. These tests provide an early indication of the potential yield by finding problems such as inoperative readout channels, as well as blocked, dead and hot areas. These results are only an estimate of the device performance since some types of defects, such as the blocked or dead columns, may freeze out when the CCDs are operated at -100 C or below. The cold-probe results are also useful for selecting which devices to package. Thus far, at Fermilab, we have temporarily withheld the best 2k x 4k CCDs (approximately 25%) while we develop our packaging and testing procedures. Once these have been fully established, these "good" devices will used to establish the packaging and testing yield.

3.2.3 CCD Readout Electronics for DES

The Monsoon readout system in use for the CCD characterization tests is also the choice of the collaboration as the system to use in the DECam itself. However, some modifications to the system are required Although the Monsoon architecture was designed to be compact and low power, it is still too large to accommodate the number of channels required by DES at the prime focus and we are investigating a number of options. A technical review panel commissioned by the collaboration has recommended that we go forward with a compressed design based on Monsoon, but customized to meet

the specific needs of the DES. The purchase of a commercial Leach system, at a density expected to be available soon, was characterized by the panel as a viable fallback solution.

Each DES CCD has two video readout channels (U/L) and requires connection to 15 clock inputs, and 7 bias voltages. In addition, each CCD has a 4-wire temperature sensor on the AlN circuit board that will be used to track the CCD temperature during operation. The NOAO Monsoon system consists of 3 boards: a Master Control Board (MCB), a Clock and Bias Board (CBB) and an 8-channel video card (ACQ). The MCB is used to communicate with host computer and control the crate. The communication link is via Systran FibreXtreme SL100/SL240 Series cards. The CBB produces 32 clocks, 36 bias voltages and 8 fast bias voltages. The 8-channel card produces 32 Bias voltages and has 8 analog channels. To fit in the prime focus cage, we have assumed that the CCD performance will not be degraded if 1) the clock signals on both sides of the CCD are tied together and 2) these signals are common to groups of 3 CCDs. This will allow each CBB to provide the clock signals for 9 CCDs. We are also compressing the 8 channel ACQ board design to make room for a total of 12 analog channels. This 12 channel board will also contain the circuitry to handle the temperature sensors on each device. With these modifications the readout for the DES focal plane will fit into three 10 slot dual backplane crates. To provide guide signals to the telescope, the guide CCDs will be operated independently of the image CCDs by locating their readout on a separate backplane. Each 10 slot crate is split into a 4-slot and a 6-slot backplane. A 4-slot backplane can readout up to 9 CCDs and will contain one MCB, one CBB and two ACQ. Each 6-slot backplane can read out up to 18 CCDs and will contain one MCB, two CBB and three ACQ. The guide CCDs will occupy one of the 4-slot backplanes. The remaining backplanes can accommodate the readout for up to 72 CCDs. Further options for customization for DES include removing the unused bias circuitry from the CBB and replacing the Systran communications link with an S-LINK[vi] system.

The CCD readout crates will be located in thermally controlled housings. These housings will maintain the CCD electronics at a constant temperature to ensure constant gain performance. The outside of the housing will follow the ambient night temperature to avoid creation of thermal plumes in the optical path. A liquid coolant, likely a water alcohol mixture, will be transported to these housings through insulated lines to remove the heat from the electronics.

3.2.4 CCD Camera

The camera vessel contains the last element of the optical corrector (C5, see below) and the CCD focal plane array. The current design uses a Liquid Nitrogen (LN2) dewar that is connected to the focal plane support plate by copper straps. Each strap will have a temperature monitor and a heater that can tune the temperature of the focal plane support plate. The CCD operating temperature will be between -150 deg. C and -100 deg. C and will be determined by study of the dark current and quantum efficiency as a function of temperature. Finite element models indicate that with 12 straps the focal plane support plate temperature can be uniform to <2 deg. C across the 525 mm diameter focal plane. The C5 lens is athermally constrained within a stainless steel cell using radial High Density Polyethylene (HDPE) spacers that are sized to compensate for the CTE difference between the lens and the cell. The C5 cell mounts to the front flange of the

camera vessel with an o-ring seal between the lens and the flange. The CCD array is attached to the vessel using bipod style mounts. The bipods mounts thermally isolate the array from the rest of the vessel and locate the array with respect to C5. The CCD vessel has a 61 cm diameter and is approximately 84 cm inches in the axial direction. Figure 10 shows the CCD vessel along with the CCD readout crates that are mounted to the outside of the vessel. The cooling straps, bipods and the feed-thru board for the CCD readout signals is shown on the left side of the figure. A full sized prototype camera vessel is currently under construction. It will provide the test bed for multi CCD readout in an environment very close to what is imagined for the final CCD vessel design.

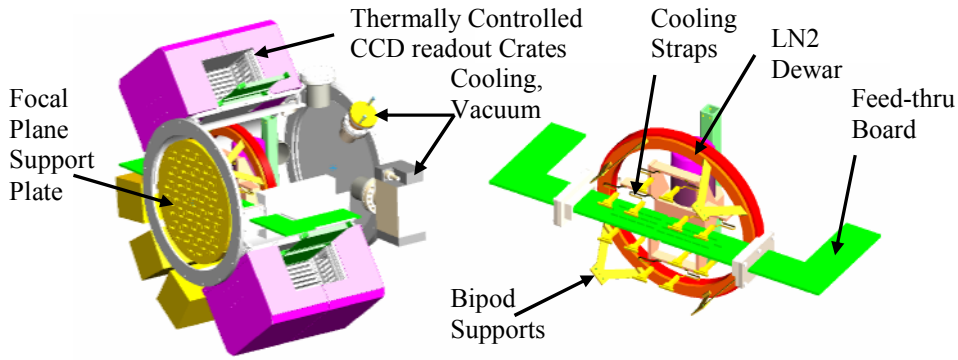

Figure 10 Cutaway view of the DES CCD vessel and a view of the internal features.

3.2.5 Optical Corrector

The optical corrector design[vii] consists of five fused silica lenses that produce an unvignetted 2.2^{o} diameter image area. The largest element (C1) has an optical clear diameter of 950 mm. The last element (C5) is the window on the CCD vacuum vessel. The shutter and filters will be located in the optical path between C3 and C4. The space is sufficient to allow a stacked filter changer and shutter to be packaged in a single housing to maximize the stiffness of the corrector barrel. The filters will be ~570 mm in diameter. Studies indicate that an Atmospheric Dispersion Corrector (ADC) would not significantly improve the optical performance for DES and thus the DECam optical corrector does not include one.

The optical design of the camera has been carefully considered to optimize performance requirements of the survey and minimize the risks associated with fabrication and assembly. The camera design is a Wynne-style, 4-element corrector with a field-flattening dewar window and all fused silica elements. Two of the surfaces are aspheric: the concave surface of C2 and the convex surface of C4. These are necessary to obtain the high required image quality over the full 2.2 deg diameter field of view and wide wavelength range (0.4-1.1microns) required for the DES science goals without increasing the mechanical complexity of the camera by adding elements or increasing the length of the camera, and with it, the size of the elements. The surface characteristics (slope and

aspheric deviation) of these aspheres are well within the range which can be easily fabricated by vendors in both the US and Europe. The largest element, C1, is also well within the demonstrated range of fabrication by our vendors. A schematic of the corrector elements is shown in Figure 11.

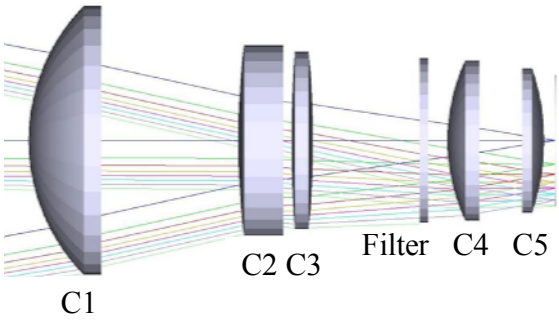

Figure 11 The DECAM optical corrector

The most important performance issues for the DES science goals are image quality and scattering characteristics (ghosting) over the full field and wavelength range. The optical design produces images with an rms radius of 8.5 microns (0.15 asec), averaged over the full field and wavelength range. This is sufficiently small that it will contribute less than 10% to the median image size resulting from atmospheric effects. Variations in scattered light will be smaller than 3% across the length of a CCD in the focal plane. This is sufficient to meet the photometric goals of the survey. The anticipated image budget and other details of the design and performance are discussed in Reference 8. Figure 12 shows the obligatory spot diagrams for the design.

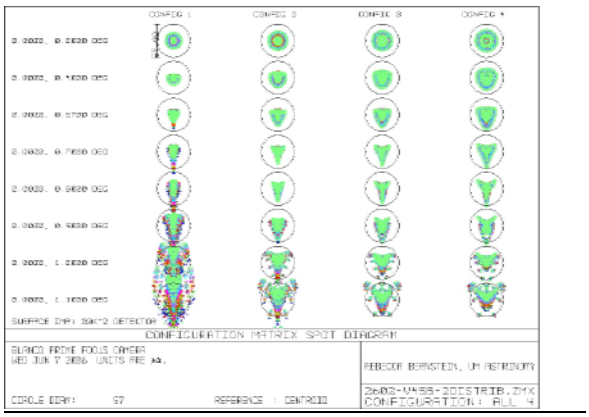

Figure 12 Spot diagrams for the DES optical design. Configs 1-4 correspond to the g,r,i,z filter band passes.

The lenses will be mounted into cells and then into the corrector barrel. Detailed design of the cells and the barrel is in progress. A conceptual design of the corrector barrel is shown in Figure 13. The corrector barrel will consist of two large pieces that bolt together. A conical section supports C1. A cylindrical section supports C2, C3, and C4 as well as the combined filter-shutter system. In earlier designs the shutter was located at the end of the cylindrical section, just in front of C5, at the connection between the corrector and the CCD vessel. The new location, just in front of C4 allows significant improvement to the strength of connection between the corrector and the CCD vessel.

The material chosen for the corrector barrel is steel and the weights of the various DES components are shown in Table 4. A preliminary Finite Element Model (FEM) of the barrel and CCD vessel has been used to estimate the deflections of each of the lenses under gravity loading. Reinforcing tubes have been added around the filter-shutter system with the goal of keeping the deflections of C1 and the focal plane to < 25 microns. The results of the FEM have been fed into a sensitivity analysis of the optics to generate an estimate of the resulting changes to the image quality and the initial indications are that the design is sufficiently stiff. Future work will include a more detailed FEM and will investigate making the barrel and CCD vessel stiffer and lighter.

Table 4 Weight of the DES components

Component	**Weight (kgs)**
Barrel	820
CCD vessel inc. C5	590
C1,C2,C3,C4 + cells	475
Filter+Shutter Cartridge	390
Total	**2275**

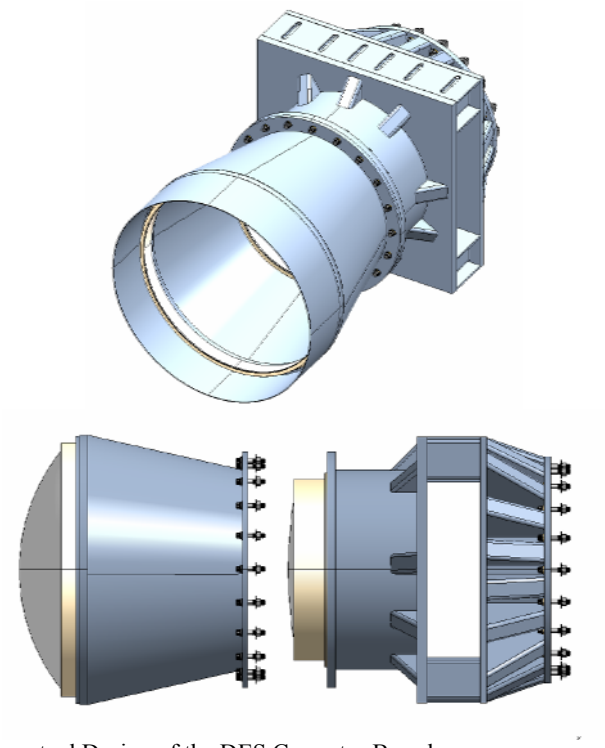

Figure 13 Conceptual Design of the DES Corrector Barrel

The leading candidate for the DECam shutter is a design developed by the Hoher List Observatory, at Bonn University. The shutter has sliding blades (a "flying slit") for fast exposures and to obtain equal exposure times in both directions of travel. The DES filters will be ~570 mm diameter and 10-30 mm thick. The main challenge in filter fabrication is expected to be uniformity over this large area. Other projects such as PanSTARRS, LSST, the WIYN ODI and the Discovery Channel Telescope have similar requirements. DES has developed a set of detailed filter specifications that has been sent out for budgetary quotes.

The filter cartridge will house the four DES filters and up to two guest filters. As shown in Figure 14, there are three cassettes in the cartridge. Each cassette houses two filters with one filter at each end of the cassette. It will also be possible to swap in alternative filters during the day if required by the community users of the camera. The cartridge and the corrector barrel are purged with dry nitrogen to maintain a slight positive pressure and constant dry environment. The cartridge system places the filters at different positions in the optical path. Initial feedback from the filter vendors indicate that the filters may be as thick as 30 mm and with the addition of the mechanical housings this will produce ~ 56 mm offsets between the filters in different cassettes. The optical beam is roughly a constant diameter in this region and we expect that all the filters will be the same size. Allowing space for 2 user community filters minimizes the number of times an alternative filter will need to be installed, thus minimizing the risks associated with handling and storage.

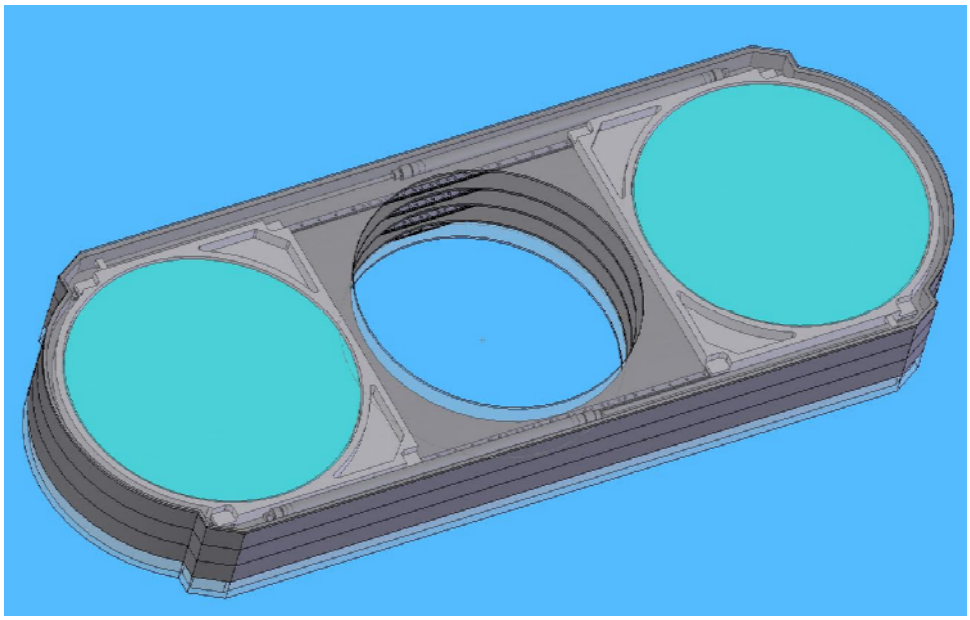

Figure 14 Filter and shutter housing conceptual design.

3.2.6 Alignment and Focus

The current conceptual design for the support and position adjustment of the camera/barrel assembly in the prime focus cage incorporates a 6-6 hexapod. As shown in Figure 1, the base of the hexapod would be mounted to a ring built into the prime focus cage. The corrector would be attached to the top of the hexapod using the front plate of the filter/shutter assembly. Note that the CCD vessel is aligned and bolted to the corrector and the combination camera/barrel system moves as a single unit. A hexapod system would provide both the focus adjustments and has the capability to provide additional degrees of freedom, if it were deemed necessary to keep the corrector aligned to the primary mirror. Serial/stacked adjustable support systems are also being evaluated as an alternative to the hexapod.

The focus and alignment CCDs will be mounted either above and below the nominal surface of the focal plane, or at an angle with respect to the focal plane. Comparison of the out-of-focus images above and below the focal plane will indicate the direction of motion needed to bring the image back into focus. The alignment CCDs and a variant of the "donut" method now under development at CTIO for the SOAR telescope will be used to monitor the alignment of the corrector to the primary mirror. The focus and alignment CCDs will be read out with the image CCDs providing image by image information on the telescope focus and alignment.

In Oct. 2005, digital micrometers were installed on the primary mirror. These allow constant monitoring of the mirror position and movements. DES also plans to install a BCAM[viii] system which will directly measure the relative positions of the mirror and the corrector without needing to operate the CCDs. Information from one or both of these

systems will be used to determine if the corrector needs to be moved laterally in the cage to be better aligned with the primary mirror.

3.2.7 Survey Image System Process Integration (SISPI)

The mountain top software in DES is called Survey Image System Process Integration (SISPI). This is the set of processes that will control the image acquisition and deliver the images to the data management system for processing. Figure 15 shows the relation between the various processes that directly control CCD digitization as well as the data and control flow between them. The processes that CTIO uses for telescope and dome control have been omitted for simplicity. DES will have about a dozen computers on the mountain devoted to different aspects of the SISPI. The DES computing environment will be similar to other existing systems such as SDSS although our cadence (exposure sequencing) and data rates will be different. The diagram is hierarchical to encapsulate interfaces and local data flow. At the right, one bubble is shown expanded.

The software integration can be divided into two kinds of work: subsystem specific software needed for device functionality and a common infrastructure to enable inter-system communication and data flow. To avoid chaos, the design work has proceeded in stages. Last fall, the collaboration wrote a Functional Requirements Document (FRD) that described what each part of the system should do. Given that document, we are now in the midst of writing an Interface Control Document (ICD) that defines more precisely the commands and data that must flow between processes. It should be complete this summer and will contain enough detail that implementation of each bubble can then be left to the individual groups that are responsible.

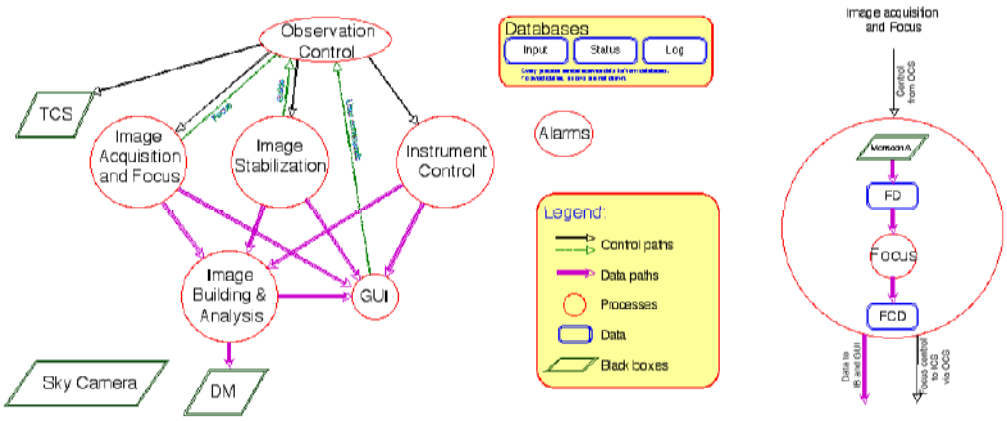

Figure 15 A schematic diagram of the DES SISPI system.

3.3 Improvements planned for the Blanco Telescope and the DECam Instrument

[Tim should revise this]
The median delivered image quality at the Blanco Telescope at present, corrected to V-band and zenith, for long exposures with the prime focus Mosaic Imager is 0.9 – 1.0 arcseconds, and the DECam-Blanco combination will do better. We expect better performance to result from substantial improvements that have been made to the telescope and its environment, most of these in a series of upgrades that were initiated a decade ago. In brief, the telescope thermal environment was improved by large ventilation doors at the telescope level to promote more efficient flushing of the dome, by several air ventilation subsystems designed to optimize the temperature of the primary mirror and telescope structure, by covering the telescope dome with thermally insulated aluminum panels, by attending to thermal management throughout the building, and by installing a servo-control to optimize the system. At the same time, active optical control of the primary and secondary mirrors was introduced so that the intrinsic quality of the telescope optics could be effectively utilized; however closing the loop was possible only at the f/8 focus, where a wave front sensor was installed.

Although all Dark Energy Survey simulations have used current performance characteristics, the Cerro Tololo observing site itself has median image quality of 0.65 arc seconds, and thus there is still room to improve delivered image quality. Many improvements will be made through DECam itself, but a number of additional upgrades and enhancements will be applied to the telescope and dome in order to maximize DECam's potential:

(i) The primary mirror active-optics control loop will be closed using wave-front sensor CCDs integrated into the DECam focal plane. The method used will probably be a variant of curvature sensing (the "donut" method) now under development at CTIO for the SOAR telescope.This will improve the focus and point-spread function stability.

(ii) Metrology of the prime focus mirror as a function of orientation has shown that the mirror moves in its cell by an amount sufficient to introduce detectable coma. The probable cause has been identified and a definitive fix is in development to be installed later this year.

(iii) Relative motions of the prime focus cage and primary mirror due to telescope flexure will be measured and checked against an FEA model to estimate the need for active compensation to be built into DECam to further improve optical performance.

(iv) The existing Mosaic imager has no overall thermal control. A full thermal management model for DECam will be developed, and control equipment will be implemented, including glycol lines and air ducts as necessary to make the instrument as thermally neutral as possible. Cooled environments for instrument electronics and for off-telescope equipment such as a cryocooler compressor will be provided.

(v) The existing environment control system will be evaluated, and options developed for improving the thermal properties of the telescope and dome. A cost-benefit analysis will decide which of the proposed options will be implemented.

(vi) The telescope control system (TCS) will be upgraded or replaced, prior to the delivery of DECam. This will improve reliability through replacement of aging systems and improve performance in areas critical to the Dark Energy Survey – in particular,

investigations have shown that it is feasible to drive the telescope the required 2 degree step between DES fields within the readout time of the camera (~17s) so that telescope slews will not limit survey efficiency.

(vii) The existing prime-focus optical corrector is thought not to achieve its designed optical performance, particularly as one element is damaged. DECam will incorporate a new optical corrector with modern design features not previously available, including SolGel coatings.

(viii) The existing Mosaic imager is refocused by interrupting observations and defocus limits delivered image quality in good observing conditions. DECam will incorporate contemporaneous focus control on the same cadence as the survey imaging, eliminating these issues.

(ix) DECam's larger imager area, faster readout (Mosaic II: 100s, DECam: <20s), better observing tools and real-time quality control will radically improve imaging observations at CTIO for the entire community.

3.4 Survey Planning and Simulations

The DECam project will produce both simulated and real data for input into the Data Management system. The catalog and image simulations will help us develop our science analysis codes and data reduction pipelines prior to the start of survey observations. Moreover, the simulations will allow us to validate our analytical forecasts of dark energy parameter constraints, as well as to extend our analyses to comprehensively characterize and incorporate the various sources of statistical and systematic errors inherent in each of our 4 key project techniques. We plan to have yearly cycles of new catalog and image simulations, followed by science analysis and data reduction challenges carried out using the simulation outputs. The level of scale and sophistication involved in each round of simulations will improve, in order to meet the requirements set in conjunction with the science analysis goals of the key project science working groups, and with the data reduction/pipeline development testing goals of the data management project.

In 2004 we produced at Fermilab the Level 0 Image Simulations (ImSim0), where we reformatted existing SDSS images to produce 220 GB of simulated DES images, in order to provide an early jump start for the data management effort to test processing pipelines. In 2005-6 we produced at Fermilab and U. Chicago our Level 1 Catalog Simulations (CatSim1), consisting of catalogs of stars and galaxies covering 500 deg^2 of sky, based on the parent Hubble Volume N-body simulation, and our Level 1 Image Simulations (ImSim1), consisting of 500 GB of simulated science images, generated using shapelets-based rendering of astronomical objects and incorporating models of DES observing and of DECam optics and detectors. These simulated data were used successfully to test the data management processing pipelines during the Data Challenge 1 (DC1) effort. In 2006-7, we are currently engaged in producing our Level 2 Simulations (CatSim2/ImSim2), where we will use a higher-resolution parent N-body simulation produced at Barcelona, generate a 5000 deg^2 galaxy catalog including more realistic galaxy properties, and produce ~5 TB of simulated images using Fermilab FermiGrid computing resources and adopting improved instrument and atmosphere models. These simulated data will be used to test recovery of the input cosmology at the catalog level and to feed the Data Challenge 2 effort. In 2007-8, for our Level 3 Simulations, we plan

to produce suites of DES catalogs with different input cosmologies, along with simulated images corresponding to ~1 year of DES observations; these simulations will be used to test recovery of input cosmologies from both the catalog and image levels using the 4 DES key project techniques, as well to provide data to stress test the full data processing system.

3.5 Data Management for the Dark Energy Survey

Data management is a serious task for the Dark Energy Survey, since the large focal plane array and short readout time mean that the survey will collect approximately 300 GB of image data per night. The data management is organized as a separate project, which is not included in the DECam project being described here. This project is managed at NCSA and UIUC, and led by Joe Mohr of UIUC. We describe its goals briefly here.

The data management project will take over the data processing once the images have been fully assembled on the mountaintop at CTIO. Data management is responsible for ingesting the data into an archive located at NCSA, and for the nightly processing pipelines at NCSA which will reduce the data into processed images with calibration and necessary corrections applied. It will also produce the object catalogs which will be used as a primary source for science analysis.

3.6 In-Kind Contributions to the DECam Project

Contributions from the DES collaborators will be managed as in-kind contributions to the DECam project.

The Spanish Consortium (IFAE and IEEC at the University of Barcelona, and CIEMAT in Madrid), using funds from CSIC, will be contributing design and production of the majority of the front end electronics boards needed for the DES CCD readout system.

Procurement of the corrector optics is targeted for non-DOE funds. The procurement of the glass blanks will be covered by university funds from U. of Portsmouth in the UK, U. Chicago and U. Michigan. Fabrication and polishing of the lenses, as well as fabrication of the lens cells, and alignment of the lenses into the cell and the cells into the barrel will by managed by the U.College London, and funded by PPARC.

An MOU with University of Illinois was signed in 2004. They have already made significant contributions to the CCD testing readout electronics and are prepared to lead the development of the SISPI system.

An MOU with University of Chicago was signed in 2004. Their funds have been used primarily for development of the CCD testing systems, and the construction of a prototype full size CCD vessel.

Development of MOUs with U. Michigan, and the foreign partners are in progress and contingent upon approval and funding from the associated funding agencies.

3.7 Project Deliverables

The final deliverables of the DECam project are:

- Simulation data sets for the data challenges
- Completed camera vessel
- Assembled and tested focal plane of 62 image + 10 alignment/focus CCDs
- Completed corrector barrel
- Assembled and tested optical corrector
- Assembled and tested primary cage
- Assembled and tested readout electronics system
- Assembled and tested auxiliary systems (sky camera, cloud camera, mirror alignment system)
- Completed and tested software for SISPI

3.8 Value Engineering for the DECam Project

Value Management, also known as Value Engineering, is defined as an organized effort directed at analyzing the functions of systems, equipment, facilities, services, and supplies for the purpose of achieving the essential functions at the lowest life-cycle cost consistent with required performance, quality, reliability and safety. The DECam project has applied the principles of value engineering during the conceptual design process. We list here some examples of value engineering decisions taken in the DES design. A major cost savings is achieved by the use of an existing telescope with excellent natural seeing and potential for improvements with modest investments at CTIO, as described in Section x.x. The decision to use the Monsoon system for CCD readout has already resulted in a considerable advance to the project R&D schedule and will also result in a very considerable savings in engineering development costs. Using the CCD design and fabrication process developed by LBNL for the SNAP project also provides a considerable savings in development costs.

3.8.1 CCDs

A fallback option to the LBNL CCDs is the deep depleted devices that have recently been developed by the British company E2V. The QE in the near-infrared region is about half that of the thick fully depleted LBNL CCDs. They could be used for our survey, but the completeness of our galaxy redshift catalogue would suffer. This is a new product for E2V and only a small number of these devices have been produced. Based on initial discussions with the company, the cost was estimated to be roughly 1.5 million more to procure the CCDs from E2V. The delivery schedule was also significantly slower (~ 3 devices/month, and not demonstrated). We believe the choice of the LBNL CCDs maximizes the science

possible with the instrument while minimizing the R&D needed for this project by using CCD design and fabrication processes that have already been proven.

3.8.2 Optical Design

Fused silica has been chosen as the material for the corrector lenses. There are two possible suppliers of this material and they are Corning (HPFS) and Heraeus (Suprasil). Heraeus are unable to produce a blank over 600mm in size but they are a possible supplier for the smaller lens blanks. Other material manufacturers were approached when alternative optical designs were being considered, including Schott, Germany (NBK-7) and Ohara, Japan (S-BSL7 and BSL-7Y). Schott said that they could produce a NBK-7 blank of the required C1 size though this would involve a development process and delivery was 12 months. Ohara said that they could produce an S-BSL7 blank for C1 (though not BSL-7Y) with a 13 month delivery.
We have been in discussion with a number of optical fabrication companies in order to discuss the manufacturability, cost and schedule of the proposed design. The companies approached have been SAGEM, SESO and Tinsley. It should be stated that we are not finally committed to using any of these firms and the optics production would need to go out to tender. Feedback from the vendors has been used in the design optimization. The goal is to minimize the fabrication difficulty. Examples of design modifications that have been implemented in the current design are limiting the maximum spherical deviation for ~ 1mm, and a maximum slope of 1mm/50mm, and limiting the size of the first element (C1) to less than 1m diameter.

3.8.3 CCD Readout Electronics

In Early 2006 the DES project director appointed an panel to examine the options for CCD readout in the prime Focus cage. Below is the section of their report that addresses alternatives to the modified Monsoon system currently under development:

"*Out of the different alternative options examined the conclusions are the following:*

- *The Leach Controller might provide a viable and commercially available alternative in case an unexpected problem with Monsoon arises. A Leach Controller system might provide a back-up solution to substitute Monsoon providing a similar performance at an affordable cost in a timely fashion. Once the production version of its 8-channel Acquisition board -to be released later this year, possibly by August 2006- is proven to work, using a group of Leach controllers in 12 slot housings provides DECAM with an option. Nevertheless, a disadvantage of Leach is that, unlike Monsoon it does not provide the bias and clock telemetry which might play an important role in the camera commissioning and operation, given the large number of CCDs and the difficulty to access the instrument at the 4m PF location. In addition, it could be that the use of the Leach controller might require the installation of the power supplies at some distance from the crates (which is the default option for Leach systems). It should be noted that*

out of the four issues mentioned above that need to be watched out for Monsoon, the last three apply equally to the Leach Controller.

- *If the 12 channel board development were not to reach the required performance, we can use the already existing 8-channel acquisition boards as a viable option, provided the power supplies are located remotely.*

- *The use of the CRIC3 ASIC for the digitization of the CCD signals -using a modified Monsoon system- does not seem at this stage as a realistic option, given the different time scales and time pressures of the different developments needed. In spite of the potential advantages of such a system, the additional work needed would probably stretch the project past its intended completion date.*

- *The development of a compact system following the design of MegaCam, seems not viable given the higher integration needed (about twice more CCDs in about the same focal plane surface) and due to the larger complexity required if the same cooling scheme would be used. The development of a compact cryostat allowing short cables a la MegaCam would need a major redesign of the DECam concept, possibly extending the development work beyond the date by which DECAM is supposed to be finalized."*

3.9 Risk Management for the DECam Project

3.9.1 Risks in the Optical Manufacture

There are four high risk areas for the optical manufacture. These are lens damage, incorrect figuring, material inhomogeneity and schedule overruns.

Incorrect figuring

Once the company is selected to manufacture the lenses, early discussions with the company will be held before the delivery of the blanks to agree on testing plans and documentation to minimise risk of incorrect figuring. Regular visits will be arranged during manufacture to monitor progress. The optical form as produced of the lenses will be monitored and fed back into the optical design for optimisation. The final lens element produced will then be polished to an adjusted specification to optimise the design.

Lens damage

Discussions will be held with the manufacturers to implement handling and shipping procedures to minimise damage risk. Lens cells will be designed with attachment points for protective covers to protect the lens and coating in transit. The lens cells will also be designed to interface with the SolGel coating dipping system. The procurement of spare lens blanks to cover for a breakage is being considered and a decision will be made at a later stage based on a cost/risk assessment.

Material inhomogeneity

For the smaller lenses the blank homogeneity can be measured before shipping to the polishers. In the case of the largest lens, homogeneity tests of the blank after sagging are difficult. It is proposed to test the optic in transmission when the surfaces are being figured so that low order inhomogeneities can be corrected through the polishing process.

Schedule
Contingency is built into the schedule for the optical manufacture of the lenses. The polishing firms have quoted 12 months from the delivery of the optics whilst 15 months are allowed for in the schedule. The fused silica blanks for the smaller C2-C5 lenses will be ready before the C1 blank and these can be shipped out to the polishing firm early. This will allow early delivery of polished optics to UCL for cell mounting and the delivery of the corrector barrel and lens cells to UCL is scheduled to allow for this.

3.9.2 Risks in the CCD Manufacture

[CCD section still needs to be written.]

4 Cost and Schedule for the DECam Project

4.1 Work Breakdown Structure for the DECam Project

Table 3 shows the DECam WBS dictionary at Level 2. Further details of the WBS are in Appendix B. The project WBS and management structure parallels the project budget structure

[old WBS table removed in anticipation of new schedule next week]

4.2 The Cost Range of the DECam Project

In this section, we describe the costs to the DOE of the DECam project.

After DES received stage 1 approval from Fermilab and was accepted by the NOAO BIRP committee, the DES project director initiated discussions with international partners who had the potential to make significant contributions to both the DES science and construction of DECam. The funding plan is that approximately 1/3 of the cost of the equipment costs of DECam will come from non-DOE funds such as our international partners and funds from collaborating universities.

The DECam schedule assumes that construction funding for the DECam project will arrive in FY08 and has a three-year profile through FY10. The US and international partners are each making in-kind contributions to both the R&D and the project construction. The proposed funding profile, including overheads and using then-year dollars, is shown in Table 5.

[Table 5: construction funds only, M&S, labor, total MIE ---- not ready yet]

At this point, we anticipate a range of 5M$ to 30M$ for the DECam project cost.

Although not part of the DECam project, we note, for completeness, that the funding needed for the Data Management project is primarily labor and is estimated to be ~ $5M. University funding and in-kind contributions of effort have been identified within the DES collaboration for work on the Data Management and a 3 year proposal has been submitted for the remainder to NSF for $1.7 M. In addition, the upgrades to the Blanco Telescope, in particular the control system are estimated to cost ~ $200k ???? and will be covered by CTIO/NOAO.

4.3 The Schedule Range of the DECam Project

A schedule for the DES project was prepared and reviewed in June 2004 as part of both the Fermilab and NOAO project review process. The procurement of the CCDs and the optical elements were identified as the critical path items for the project. Since those reviews, we have focused our resources on addressing these topics. We are on a schedule for delivery of DECam to CTIO in 2009, assuming that funding from the several national agencies can be solidified over the next year.

The optics are one of the critical path elements primarily because of the lengthy (2-2.5yr) estimated procurement. We held a Project Director's Review of the Optical design in February 2006 to obtain early feedback from external reviewers. Their response to the DES design was positive and they urged us to move forward with the rest of the mechanical design. We plan to have a review of the full DES project (which encompasses more than the DECam project being described in this document) in Sept. 2006 with the goal of being ready to place the order for the glass blanks in August, or as soon as the funding is secured.

The CCDs are also on the critical path due to the estimated delivery rate (5 wafers per month plus a 3 month startup) combined with the uncertainty in the CCD yield. The silicon processing for these devices is under development, and it is difficult to estimate the final yield results until all the issues in the processing chain have been understood. Assuming the yield is 25%, production of 70 good devices would require ~ 18 months of processing, packaging and testing. By December 2006, we should have more information on the CCD yield. This will feed directly into the project cost and schedule. The high level schedule elements of the DECam project are shown in Table 2 (not yet).

The end of the DECam project is defined by acceptance tests at CTIO, prior to installation on the telescope. The CTIO director will determine the schedule for installation of DECam on the Blanco.

5 Justification for the DECam Project

5.1 Mission Need for a Ground-Based Dark Energy Experiment

The Mission Need Statement for a Ground-Based Dark Energy Experiment, approved in November 2005, discussed the science case for better precision in the measurement of dark energy. It also noted the support from a recent report from the National Research Council (*Connecting Quarks with the Cosmos,* April 2002) and from the National Science and Technology Council's strategic plan to respond to that report (*ThePhysics of the Universe,* 2004) for a dark energy program using multiple techniques from space and from the ground. It stated:

" A project to build a ground-based detector or facility capable of studying dark energy will support the Department of Energy's Strategic Plan dated September 30, 2003: *To protect our national and economic security by providing world-class scientific research capacity and advancing scientific knowledge.* Specifically, it will support the two Science goals: *1) Advance the fields of high-energy and nuclear physics, including the understanding of dark energy…* and *7) Provide the Nation's science community access to world-class research facilities…*"

The Mission Need statement then identified three options that could provide complementary ground-based measurements of dark energy as the next steps in a robust dark energy program. We believe Option 1 offers the fastest approach to make the next step in increasing our understanding of dark energy. Option 1 was described as:

"Construct a large-scale charged-coupled device (CCD) camera for galaxy cluster counting and other dark energy measurements. The camera could be installed on the Blanco 4m Telescope in Chile. The combination of this telescope and camera with the necessary sensitivity will make it more than 10 times more powerful than any existing facility. In combination with galaxy cluster mass measurements from other telescopes, the data would provide the first high precision (5 – 10% statistical errors) dark energy constraints."

The National Optical Astronomy Observatory (NOAO) issued an announcement of opportunity (AO) in December 2003 for an open competition to partner with NOAO in building an advanced instrument for the Blanco telescope in exchange for awarding the instrument collaboration up to 30% of the observing time over a five-year period for a compelling science project. In response to this AO, the Dark Energy Survey (DES) Collaboration was formed and submitted a proposal to NOAO in July 2004 to build DECam, a new wide-field imager for the Blanco, with the goal of carrying out a survey to address the nature of the dark energy using the four primary techniques described below in Sec. 2.2. The Blanco Instrumentation Review Panel convened by NOAO to review the DES proposal in August 2004 concluded that the scientific goals are exciting and timely. Subsequently, the NOAO Director asked the CTIO Director and the DES Project Director to draft an MOU among the Parties that would define the terms of the partnership. Since that time, the Dark Energy Survey collaboration has further developed the ideas in the proposal and has been strengthened by the addition of strong partners from two international consortia [1,2] and from US universities. The collaboration has conducted

R&D to determine more firmly the feasibility of the project, and is now ready to request the next level of approval for the project to construct an instrument which would meet the need expressed in Option 1.

5.2 How the DECam Project Satisfies Option 1 in the Mission Need Statement

Option 1 of the Mission Need statement calls for a new large CCD camera to be installed on the Blanco 4m Telescope. This describes the core of the DES project. Option 1 also calls for a project capable of improving the statistical precision of our knowledge of the dark energy equation of state to 5-10%, by the use of multiple, complementary techniques. The four techniques which DES proposes to use for probing dark energy are well-matched to the requirement for better precision in the intermediate time scale. These techniques are described briefly, below. More detail on these techniques is available in the DES white papers, submitted to the Dark Energy Task Force, which are available at [link].

***Galaxy clusters*:** Measuring the number of galaxy clusters as a function of redshift provides a sensitive probe of the dark energy through both the cosmic expansion history and the growth rate of large scale structure. DES was designed with the goal of being able to perform this measurement in the most effective way, by making use of the overlap with the South Pole Telescope (SPT) to combine DES photometric redshift and statistical weak lensing mass measurements with clusters identified by the Sunyaev-Zel'dovich effect (SZE) from SPT. DES will also be able to provide a crucial cross-check of the completeness of the SPT cluster selection function by optically identifying clusters below the SPT mass threshold. Existing cameras would require decades to cover the SPT survey area to the requisite depth for this measurement. Given the independent selection and measurement of clusters in the DES optical survey and the SZE survey, we will be able to achieve improved control of systematic errors for the cluster dark energy measurement.

Weak lensing tomography: Weak lensing shear is a measure of the change of the apparent shape of galaxies produced by the gravitational light-bending effects of mass along the line of sight to the observer. DES will measure the weak lensing shear of galaxies as a function of photometric redshift. As with clusters, the redshift evolution of the statistical pattern of lensing distortions is sensitive to the dark energy through both geometry (that is, distances that depend on the cosmic expansion history) and the growth rate of structure. In the course of surveying 5000 deg^2 to the depth needed to count clusters, DES will measure shapes and photometric redshifts for ~300 million galaxies and, with improved design and control of the optical image quality, enable accurate measurement of lensing by large-scale structure.

***Baryon Acoustic Oscillations*:** DES will measure the angular clustering of galaxies in photometric redshift shells out to redshifts beyond 1. The angular power spectrum of galaxy clustering shows characteristic features, a broad peak as well as baryon wiggles arising from the same acoustic oscillations that give rise to the Doppler peaks in the CMB temperature anisotropy power spectrum. These features in the pattern of galaxy clustering were recently detected in the SDSS at low redshift, z~0.3. In combination with CMB observations, they serve as standard rulers for distance measurements, providing a geometric probe of the dark energy.

Supernova luminosity distances: In addition to the wide-area survey, the DES will use 10% of its allocated time to discover and measure well-sampled multi-band light curves for ~1900 Type Ia supernovae in the redshift range $0.3<z<0.75$ through repeat imaging of a 40 deg^2 region. As standardizable candles, these supernovae will provide (geometric) distance estimates that constrain the properties of the dark energy.

DES is able to acquire the data for the first 3 listed techniques with the same survey strategy on the same instrument. The combined constraints on w_0 and w_a from the four techniques are shown in Fig. 1 [diagram from Josh's P5 talk]. There are two points to note about this combination of constraints. Of the four techniques, the BAO and SN measurements are sensitive only to the effect of cosmological parameters on geometry, while the cluster and weak lensing measurements are sensitive to their effects on both geometry and the growth of large scale structure. Having comparable precision from the full complement of techniques, to the levels DES can achieve, should yield information that will help distinguish between different types of explanation for dark energy. The other notable point is that the contours shown in Fig 15 are marginalized over other parameters (omega-b, etc.) and the four techniques have different sensitivities to those parameters. It is that latter point which gives the combination of the four its great power in constraining the dark energy equation of state.

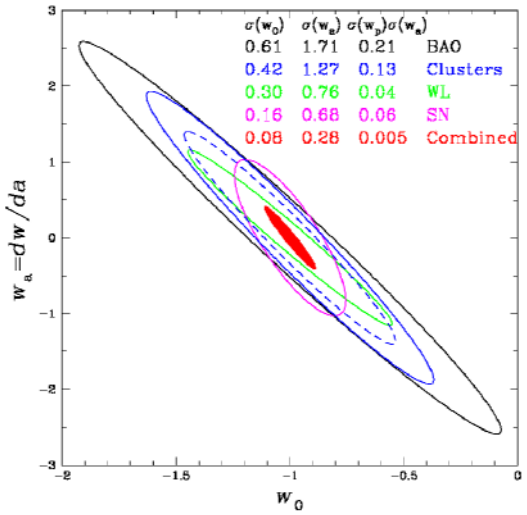

Figure 16. DES constraints on the 2-parameter dark energy equation of state.

5.3 Comparison of DECam to Alternatives for This Mission Need

[This section will be supplied by John Peoples.]

6 Managing the Project Responsibly

6.1 Environment, Safety, and Health

The design, construction and testing of DECam at Fermilab will be performed in compliance with the standards in the Fermilab ES&H Manual (FESHM), and all applicable ES&H standards in the Laboratory's "Work Smart Standards" set. In addition, all related work, including work performed off-site, will be performed in compliance with applicable federal, state and local regulations. All work done at collaborating universities will be performed in accordance with existing university policies and applicable national, state, or local regulations.

The Fermilab ES&H Section provides ES&H support for all activities at Fermilab, including guidance on ES&H issues, environmental monitoring and safety assessments. The Particle Physics Division ES&H and Building Management Department provides additional support for specific aspects of the camera construction.

Fermilab follows the principle of Integrated Safety Management. Each person involved in DECam is responsible for following good ES&H practices in the course of his or her own work. However, in addition to these ordinary responsibilities, the DECam Project has an assigned ES&H Coordinator, who directs the preparation of hazard analyses, ES&H reviews, and associated documentation.

6.1.1 The National Environmental Policy Act (NEPA)

In compliance with NEPA, the DECam Project submitted an Environmental Evaluation Notification Form, on the basis of which a Categorical Exclusion was granted on TBD.

6.1.2 Safety Assessment Documents

A draft DECam Hazard Assessment Document has been prepared for this Project and will serve as the basis for the Preliminary Safety Assessment Document (PSAD) required for CD-2. A Safety Assessment Document (SAD) will be prepared prior to installation and/or sustained operations of the completed Camera.

Although the installation of the DECam detector is not part of the DECam project, life safety issues pertaining to the installation and operation of the detector have been considered as part of the life cycle assessment. In cooperation with NOAO, Fermilab has performed an assessment of life safety issues for DECam operations at the Cerro Tololo Inter-American Observatory. The assessment focused on operations at CTIO. ES&H procedures for installing instruments and operating the Blanco Telescope have already been established by AURA, the contractor for NOAO. A Safety Assessment Document (SAD) will be prepared prior to the delivery of DECam to CTIO.

6.1.3 Integrated Safety Management Plan

The DECam Project will be executed in accordance with the principles of Integrated Safety Management (ISM) as specified in DOE P 450.4. While direct implementation of ISM is a line management responsibility, it is also addressed at the project level. The Project will prepare an ISM Plan, which addresses the following ISM principles.

Defining the Scope of Work, Identifying Hazards

Subproject managers are responsible for planning work, identifying ES&H concerns and resources needed to support the work. The DECam Project staff meets regularly with line and safety managers to discuss planned work and establish priorities. Progress on priority items is tracked and submitted in the monthly report.

The project has prepared a Hazard Analysis Document. This document and additional hazard analyses initiated by line management will be in conformance with the FESHM, Chapter 2060.

Developing and Implementing ES&H Controls

Applicable ES&H Standards are integrated into all project planning documents. Work processes are documented and reviewed.

Where applicable, the project tasks with identified ES&H hazards will specify appropriately trained workers or else the schedule will allow for adequate training. Where possible, the project schedule will allow for dry runs of hazardous procedures.

Assessing Performance for Continuous Improvement

The project will undergo periodic ES&H reviews. These reviews may be conducted jointly by Fermilab and the DOE, and may be part of technical reviews of subprojects rather than standalone reviews. Reviews will generate recommendations that will be addressed by the project in a timely manner. More details on the various reviews DECam will undergo are given in Section 7.

6.1.4 Waste Minimization/Pollution Identification

Waste Minimization and Pollution Prevention (WM/P2) concepts will be embedded into all aspects of research and operations at Fermilab. A strong WM/P2 program is an integral part of the Laboratory's Environmental Management System. Fermilab's WM/P2 Program reflects Department of Energy, national and local WM/P2 goals and policies. It represents an ongoing effort to integrate WM/P2 with our research mission.

Fermilab's WM/P2 program is anchored by three tenets commonly associated with pollution prevention objectives. They are Reduce, Reuse and Recycle. DECam is doing all of these in the design process and will continue to during the life of the project and on through the operation of the experiment. Specifically, the materials DECam is recycling include any discarded electronic equipment from the prototyping or production phases, via Fermilab's lab-wide electronics recycling program.

Fermilab has a comprehensive program for the handling, storage, and disposal of both radioactive wastes and hazardous chemical wastes. The various waste programs are described in the FESHM, Chapter 802. DECam construction is not expected to generate any radioactive wastes. There may be generation of chemical waste, in small amounts, and such waste will be handled according to the relevant sections of the FESHM.

6.2 Safeguards and Securities Plan and Vulnerability Assessment

Safeguards and security will be covered under Fermilab's existing DOE-approved program. The DECam Project will create no new security issues during design or fabrication. DECam has no special nuclear material (enriched uranium or plutonium) and no nuclear material (natural or depleted uranium). Thus extra protective measures are not required. Access to Fermilab is controlled to ensure worker and public safety and property protection. None of the work on the DES or on the DECam Project is classified. The risk of safeguards and security issues is, therefore, small. DECam is not an attractive

target for terrorists, theft, or malicious action. Therefore, due to the 24/7 security force on site, Fermilab's safeguards and security program, and the non-attractiveness of DECam as a target, the vulnerability assessment is very low.

No laboratory safeguards and security requirements will need to be changed for installation or operations subsequent to project completion

6.3 Preliminary Plan for Demobilization of Replaced Facilities

The only facility to be replaced is the MOSAIC II instrument which currently occupies the prime focus cage on the Blanco telescope. The responsibility for unmounting and decommissioning the MOSAIC II rests with CTIO [or the MOSAIC team/collaboration??], not with the DECam project.

6.4 Preliminary Plan for Decontamination and Decommissioning

It is the policy of Fermilab to maintain information necessary for future Decontamination and Decommissioning (D&D) of any or all of the facilities at the Laboratory. The eventual D&D of the beamlines, accelerators and other facilities at Fermilab, will be done in accordance with the provisions of FESHM, Chapter 8070. The major facility used during DECam construction is the Silicon Detector Facility (SiDet). The DECam project will comply with any documentation requirements regarding its use of SiDet with regard to eventual D&D for that facility. The only hazardous material used in the construction of DECam is the black paint used on the camera vessel. The project plans to use a paint-handling facility at the University of Chicago for the painting operation, which will completely mitigate this hazard.

The decommissioning of the DECam upon completion of the Dark Energy Survey is addressed in the Memorandum of Understanding between NOAO and Fermilab, which states:

"Upon completion of the Dark Energy Survey, the DECam will be transferred from CTIO to Fermilab, at Fermilab's expense. Fermilab will return the property contributed by the Collaborating Institutions in accordance with arrangements made with those institutions. AURA will retain title to its contributed equipment. Other arrangements may be made with the interested parties before the completion of the Dark Energy Survey.

"Return of DECam hardware to Fermilab will be performed in accordance with any applicable US import control laws and regulations."

6.5 Preliminary Project Execution Plan

The DECam Project Execution Plan (PEP) summarizes the mission need and justification of the DECam project, its objective and scope, the Department of Energy (DOE)

management structure, the resource plan, and the environmental, safety, and health (ES&H) requirements. In addition, it establishes the technical, cost, and schedule baselines for the project, as well as the DOE Baseline and Change Control thresholds. The DECam Preliminary PEP was submitted to DOE for approval on July xx, 2006.

7 Preliminary Management Control Documents

7.1 Memoranda of Understanding

The DECam project is being carried out by the DES Collaboration. The portion of the work carried out a Fermilab is the responsibility of the Universities Research Association, which operates Fermi National Accelerator Laboratory (Fermilab) under Contract DE-AC02-76-CH- 03000. The UK- Consortium and the DES-Spain Consortium have committed to provide subsystems for DECam as in-kind contributions through MOU's with Fermilab.

7.2 Preliminary Project Management Plan

The DECam Project Management Plan (PMP), which is a complementary document to the PEP, describes the organization and systems that the contractor will employ to manage the execution of the project and report to DOE. Subsequent changes to the project scope, cost, or schedule exceeding thresholds defined in the PEP will be traceable, and made in accordance with the Change Control procedures described in the PEP.

8 Public and Stakeholder Input

8.1 Stakeholders in the DECam Project

The DECam Project involves the construction of a CCD camera and its associated mechanical infrastructure. The activity of construction will be carried out at Fermilab and at collaborating institutions, in accordance with established guidelines at these institutions, as well as any applicable local, state, or federal regulations. We do not anticipate any significant impact on the local community from the DES construction activity, so there should be no stakeholder issues from the general public.

The primary stakeholders for the DECam project are the Dark Energy Survey collaboration, and the broader astronomical community who wish to observe using the DECam instrument, or to utilize the survey data. The understanding of the DES obligations to the astronomical community is detailed in the Memorandum of Understanding between DES and NOAO, and is excerpted in the following section.

8.2 Community Use of DECam and Access to Data Obtained with DECam

The Memorandum of Understanding between Fermilab and NOAO provides an agreement under which the astronomical community will make use of the DECam

instrument during the remaining 70% of observing time when the DES is not observing, and also provides the guidelines for public access to data from the Dark Energy Survey, as follows:

"DECam will be a facility instrument that will be available for use on the Blanco by other observers, who will be selected by NOAO through peer reviewed proposals or through the agreement between the AURA Observatory and the University of Chile. Whenever possible, the policies for the use of DECam on the Blanco Telescope will be consistent with NOAO policy for facility instruments. It is expected that up to 70% of the time could be awarded to observers through the aforementioned processes.

"CTIO, in consultation with the CTIO user community, will develop a priority list of filters in addition to those provided by the Collaboration, to enable additional community science. Purchase of these filters, and fabrication of suitable filter cartridges, will be the responsibility of CTIO. The development of calibration and reduction procedures, if different from those developed by the Collaboration and NOAO DPP for the DES, will be the responsibility of CTIO and NOAO DPP.

"The Collaboration shall deliver the raw DES data obtained with DECam and the calibrated single images produced from this data by the Collaboration to NOAO DPP 12 months after the individual observations have been taken. The Collaboration and NOAO DPP plan to place the raw data and the calibrated single images in the NOAO Science Archive in order to make them available to the astronomical community. NCSA and NOAO plan to distribute the raw data and the archive-ready data products through an agreement between NOAO and NCSA, using the same NCSA facilities that will be used to distribute these products to the Collaboration. The Parties agree that this arrangement is in accord with the current AURA/NOAO Data Rights Policy. The AURA/NOAO data rights policies shall also be applied to science data obtained with time awarded to other observers on the Blanco with DECam through peer reviewed proposals to NOAO.

"The final, public DES archive, which will be finished after the 5-year survey is completed, is the final program deliverable of the Dark Energy Survey. Maintenance of the final, public DES archive, which will be part of the NOAO Science Archive, will be the responsibility of the NOAO DPP after it is delivered to NOAO."

9 Project Reviews

The DECam Project will undergo a series of reviews to monitor the progress of the cost, schedule, technical aspects and safety of the project.

9.1 Technical Reviews

The Dark Energy Survey project, encompassing the DECam project being described here as well as the other major DES components (the optical corrector system and the data management project) will have at least one full-scale technical review by September of 2006. For all major procurements there will be a final design review before the purchases

are initiated in order to ensure that the design and specifications meet the need of the project and that value engineering principles have been applied.

9.2 ES&H Reviews

All technical reviews cover the ES&H aspects of the project and thus the ES&H reviews may be part of the overall technical review, instead of its own standalone review. Additional ES&H reviews may be scheduled at the Project Manager's discretion. The Project Manager will address any findings of noncompliance with ES&H requirements and inform the Division Head in writing of the resolution of those findings.

9.3 Director's Reviews

The Fermilab Director or his designee will appoint a committee to conduct periodic reviews of the DECam Project to monitor its progress. Director's Reviews are held at the Director's discretion, typically on an annual basis. The Directors of the two other laboratories which have an oversight interest in the Dark Energy Survey, NOAO and NCSA, will be invited to participate or send representation to these reviews.

Appendices

Appendix A: Mission Need Statement – Ground-Based Dark Energy Experiment

Appendix B: Work Breakdown Structure

Appendix C: Glossary

Appendix D: List of Abbreviations Used and Definitions

---

[i] See "The CTIO V. M. Blanco 4-m Telescope and the Dark Energy Survey" T. Abbott et al in the Proceedings of SPIE Astronomical Telescope and Instrumentation Meeting, May 24-31,2006, Orlando, FL.

[ii] Holland, S. et al. IEEE Trans. Elec. Dev., 50, 225 (2003).

[iii] "Testing and Characterization of CCDs for the Dark Energy Survey" J. Estrada et al, in the Proceedings of SPIE Astronomical Telescope and Instrumentation Meeting, May 24-31,2006, Orlando, FL.

[iv] "0.250mm-Thick CCD Packaging for the Dark Energy Survey Camera Array" G. Derylo et al in the Proceedings of SPIE Astronomical Telescope and Instrumentation Meeting, May 24-31,2006, Orlando, FL.

[v] Information on the Monsoon CCD readout system is available at: **http://www.noao.edu/ets/monsoon/**

[vi] For Information on S-LINK see: http://hsi.web.cern.ch/HSI/s%2Dlink/

[vii] "The Dark Energy Survey Optical Corrector Design", S. Kent, et al. in the Proceedings of SPIE Astronomical Telescope and Instrumentation Meeting, May 24-31,2006, Orlando, FL.

[viii] For information on the BCaMs see **http://alignment.hep.brandeis.edu/Devices/BCAM/**.