The Dark Energy Camera Project Conceptual Design Report

(DECam)

The Instrument for the Dark Energy Survey

Table of Contents

1 Introduction
2 Description of the Recommended Alternative
3 Schedule and Cost Range
4 Alternative Analyses
5 DECam and Blanco Performance Parameters and Operations site Selection
6 DECam Conceptual Design
7 Condition Assessments of the facilities
8 Safeguards and Securities Plans and Vulnerability Assessment
9 Preliminary Project Execution Plan
10 Work Breakdown Structure
11 Environment, Safety and Health
12 Public and Stakeholder Input
13 Draft Decontamination and Decommissioning Plan
14 Preliminary Interface Control Documents
15 Reviews
16 Project End-state
17 Project constraints
18 Preliminary Plan for Demobilization of the Replace Facilities
19 Technical considerations
Appendix A WBS to Level 3

1 Introduction *(John Peoples)*

Today, the most critical research in cosmology focuses on understanding the accelerating expansion of the universe. In 1998 two independent teams studying very distant supernovae observed that supernovae type 1a appeared dimmer than expected. This dimness could be explained by either evolution in the intrinsic luminosity of the supernovae or an acceleration of the universal expansion. The gravitational attraction of galaxies and their dark matter halos decelerates the expansion and this acceleration requires something new and strange: dark energy. Since then independent lines of evidence for dark energy have been found.

The high precision measurements of the temperature fluctuations of the cosmic microwave background (CMB) made with the NASA Wilkinson Microwave Anisotropy Probe (WMAP) mission showed that the geometry of the universe is flat to within the errors of their measurements. A flat universe requires that the total energy density must be equal to a critical value. The Sloan Digital Sky Survey and WMAP have determined that the total matter density, the sum of the normal and dark matter densities, is equal to 30% of this critical value. The remaining 70% of the energy density is attributed to the unseen dark energy—in agreement with the supernova studies.

The dark energy could be a simple vacuum energy density (the "cosmological constant") or a flaw in Einstein's general relativity or evidence that our world lies embedded in a much higher dimensionality universe. Whatever it is, dark energy appears to be a new and fundamental feature of space itself and it cannot be incorporated into our current models of the nature of matter, energy, space and time.

To fully probe the nature of dark energy, its effects on the history of the expansion rate of the universe, from the current epoch back to approximately 10 billion years ago, need to be measured with much greater precision than the current experiments can provide. This calls for a coherent Dark Energy program consisting of a sequence of incremental steps of increasing scale, technological complexity, and scientific reach using ground- and space-based telescopes.

Ground-based telescopes can be used for measurements of Type Ia supernovae as well as newer, independent methods, which include measuring the rate of galaxy cluster formation, measuring mass distributions using weak gravitational lensing, due to the deflection of light by the presence of matter, as a function of the age of the universe and the measurement of the imprint of baryonic oscillations in the early universe on matter distributions.

Determining the nature of dark energy is a high priority science objective for the DOE High Energy Physics program. The National Research Council's April 2002 report entitled "*Connecting Quarks with the Cosmos*" outlined a program using multiple techniques from space and the ground to get at the nature of dark energy. The 2004 report from the National Science and Technology Council provided a Federal cross-agency strategic plan, "*The Physics of the Universe*" for discovery at the intersection of physics

and astronomy in response to the NRC report, "*Connecting Quarks with the Cosmos*". The NSTC report gave its highest priority to dark energy measurements and proposed a multi-pronged strategy to "provide independent verification and increase the precision of the overall [dark energy] measurements". In addition to type Ia SN observations the report recommended developing galaxy clusters and weak lensing techniques. The report recommended that the program include space-based missions and ground-basedobservation campaigns.

Existing ground-based facilities cannot provide the precision to pin down the nature of dark energy and to constrain the theoretical models. A project to build a ground-based detector or facility capable of studying dark energy will support the Department of Energy's Science Strategic Goal within the Department's Strategic Plan dated September 30, 2003: *To protect our National and economic security by providing world-class scientific research capacity and advancing scientific knowledge*. Specifically, it will support the two Science goals: *Advance the fields of high-energy and nuclear physics, including the understanding of dark energy* and *provide the Nation's science community access to world-class research facilities*…

2 Description of the Recommended Alternative *(John Peoples)*

The Mission Need Statement for a Ground-Based Dark Energy Experiment identified three concepts that could provide complementary ground-based measurements of dark energy as the next step in a robust dark energy program. All concepts are optimized for one type of technique, but several of the options can make measurements of each technique in a complementary fashion. Option 1, the recommended alternative for the first step in the Dark energy Program can significantly increase the precision of each measurement technique and offers the fastest approach to make the next step in increasing our understanding of dark energy. [Needs reworking]

Option 1: Construct a large-scale charged-coupled device (CCD) camera for galaxy cluster counting and other dark energy measurements. The camera could be installed on the Blanco 4m Telescope in Chile. The combination of this telescope and camera with the necessary sensitivity will make it more than 10 times more powerful than any existing facility. In combination with galaxy cluster mass measurements from other telescopes, the data would provide the first high precision (5 – 10% statistical errors) dark energy constraints.

The National Optical Astronomy Observatory (NOAO) issued an announcement of opportunity (AO) in December 2003 for an open competition to partner with NOAO in building an advanced instrument for the Blanco telescope in exchange for awarding the instrument collaboration up to 30% of the observing time over a five-year period for a compelling science project. In response to this AO, the Dark Energy Survey (DES) Collaboration was formed and submitted a proposal to NOAO in July 2004 to build DECam, a new wide-field imager for the Blanco, with the goal of carrying out a survey to address the nature of the dark energy using the four primary techniques described below in Sec. 2. The Blanco Instrumentation Review Panel convened by NOAO to review the

DES proposal in August 2004 concluded that the scientific goals are exciting and timely. Subsequently, the NOAO Director asked the CTIO Director and the DES Project Director to draft an MOU among the Parties that would define the terms of the partnership.

2.1 Dark Energy Survey Techniques: The Scientific Objectives

The four proposed techniques for probing dark energy are as follows:

***Galaxy clusters*:** The evolution of the galaxy cluster mass function and cluster spatial correlations provide a sensitive probe of the dark energy; these observables are affected by cosmology through both the growth of density perturbations and the evolution of the volume element (Haiman, Mohr, & Holder 2000, Battye & Weller 2003). Clusters make promising cosmological probes, because the formation of these large potential wells involves only the gravitational dynamics of dark matter to good approximation. The primary design driver of the DES is the detailed optical measurement of galaxy clusters, including photometric redshifts, in conjunction with the South Pole Telescope (SPT) Survey. The SPT (Ruhl et al 2004) will use the Sunyaev-Zel'dovich effect (SZE) to detect galaxy clusters out to large distances, providing a census of tens of thousands of clusters over a 4000 square degree region south of declination $\delta = -30^{o}$. The integrated SZE flux decrement is expected to be a robust indicator of cluster mass, because it is a measure of the total thermal energy of the electrons residing in the gravitational potential well; in particular, it should be insensitive to gas dynamics in the cluster core (Motl et al 2005, Nagai 2005). The DES is designed to measure efficiently and accurately photometric redshifts for all SPT clusters to z=1.3. It will also cross-check the completeness of the SPT cluster selection function by optically identifying clusters below the SPT mass threshold and will statistically calibrate SZE cluster mass estimates using the cluster-mass correlation function inferred from weak lensing (Johnston et al 2005). Existing cameras would require decades to cover the SPT survey area to the requisite depth.

Weak lensing tomography: The DES will measure the weak lensing (WL) shear of galaxies as a function of photometric redshift. The evolution of the statistical pattern of WL distortions—for example, the shear-shear (S-S) angular power spectrum—and of the cross-correlation between foreground galaxies and background galaxy shear (galaxy-shear correlations, G-S), are sensitive to the cosmic expansion history through both geometry and the growth rate of structure (Hu 2002, Huterer 2002). In the course of surveying 5000 sq. deg. to the depth required for cluster photo-z's, the DES will measure shapes and photometric redshifts for ~300 million galaxies and, with improved control of the optical image quality, enable accurate measurement of lensing by large-scale structure.

***Galaxy angular clustering*:** The DES will measure the angular clustering of galaxies (denoted G-G in Table 1) in photometric redshift shells out to z~1.1. The matter power spectrum as a function of wave-number shows characteristic features, a broad peak as well as baryon wiggles arising from the same acoustic oscillations that give rise to the Doppler peaks in the CMB power spectrum; these features were recently detected in the

SDSS (Eisenstein et al 2005). In combination with CMB observations, they serve as standard rulers for distance measurements, providing a geometric test of cosmological parameters. This approach will provide cosmological information from the shape of the power spectrum transfer function and physically calibrated distance measurements to each redshift shell (e.g., Hu & Haiman 2003, Seo & Eisenstein 2003, Blake & Bridle 2004).

Supernova luminosity distances: In addition to the wide-area survey, the DES will use 10% of its allocated time to discover and measure well-sampled *riz* light curves for ~1900 Type Ia supernovae in the redshift range $0.3<z<0.75$ through repeat imaging of a 40 deg^2 region. These SNe will provide relative distance estimates to constrain the properties of the dark energy.

2.2 Technical Goals

The major components of DECam are a 519 megapixel optical CCD camera, a 2.2 deg. field of view optical corrector, a 4-band filter system with SDSS *g, r, i,* and *z* filters, guide and focus sensors mounted on the focal plane, a low-noise CCD readout, a cryogenic cooling system to maintain the focal plane at 180 K, as well as a data acquisition and instrument control system to connect to the Blanco observatory infrastructure. The camera focal plane will consist of sixty-two 2k x 4k CCDs (0.27"/pixel) arranged in a hexagon covering an imaging area of 3 sq. degrees. The smaller format guide and focus CCDs will be located at the edges of the focal plane.

The Dark Energy Survey (DES) Collaboration requested 525 nights of observing on the Blanco telescope over 5 years, concentrated between September and February, beginning in Sept. 2009 to carry out the Survey with DECam. With that time, it can reach photometric limits of g=24.6, r=24.1, i=24.3, and z=23.9 over 5000 sq. deg of sky. These are 10σ limits in 1.5" apertures assuming 0.9" seeing and are appropriate for faint galaxies; the corresponding 5σ limit for point sources is 1.5 mags fainter. These limits and adopted median delivered seeing are derived from detailed survey simulations that incorporate weather and seeing data at CTIO over a 30-year baseline.

The survey strategy is designed to optimize the photometric calibration by tiling each region of the survey with at least four overlapping pointings in each band. This provides uniformity of coverage and control of systematic photometric errors via relative photometry on scales up to the survey size. It will enable us to determine photometric redshifts (photo-z's) of galaxies to an accuracy of $\sigma(z)\sim0.07$ out to $z>1$, with some dependence on redshift and galaxy type, cluster photometric redshifts to $\sigma(z)\sim0.02$ or better out to $z\sim1.3$, and shapes for approximately 200 million galaxies; these measurements will be sufficient to meet the survey science requirements. 4000 deg^2 of the survey region will overlap the South Pole Telescope Sunyaev-Zel'dovich survey region; the remainder will provide coverage of spectroscopic redshift training sets, including the SDSS southern equatorial stripe, and more complete coverage near the South Galactic pole.

3 Schedule and Cost Range *(Brenna Flaugher)*

3.1 Schedule Range

[Paragraphs copied from Flaugher SPIE paper]
A detailed schedule for the DES project was prepared and reviewed in June 2004 as part of both the Fermilab and NOAO project review process. The procurement of the CCDs and the optical elements were identified as the critical path items for the project. Since those reviews, we have focused our resources on addressing these topics. We are on a schedule for delivery of DECam to CTIO 2009, assuming that funding from the several national agencies can be solidified over the next year.

The optics are on the critical path primarily because of the lengthy (2-2.5yr) estimated procurement. We held a Preliminary Review of the Optical design in Feb. 2006 to obtain early feedback from external reviewers. Their response to the DES design was positive and they urged us to move forward with the rest of the mechanical design. We plan to have a complete review of the DES project in July 2006 with the goal of being ready to place the order for the glass blanks in August, or as soon as the funding is secured.
The CCDs are on the critical path due to the estimated delivery rate (5 wafers per month plus a 3 month startup) combined with the uncertainty in the CCD yield. For example, assuming the yield is 25%, production of 70 good devices would require ~ 18 months of processing, packaging and testing. By Dec. 2006 we should have more information on the CCD yield. This will feed directly into the project cost and schedule.

DES Timeline:
R&D FY06,07 CCDs: establish packaging and testing procedures, develop firm estimate of yield
Develop full prototype of prime focus CCD electronics and the SISPI
Finalize optical design and place contracts for the lenses with non-DOE funds
FY08 DOE Construction Start:
Production processing of CCD wafers at LBNL
Production CCD packaging and testing
Production CCD readout and image assembly system
Camera vessel construction
FY09-FY10 Complete CCD production, packaging and testing
Assemble and test full focal plane
Assemble and test optical corrector
Ship to Chile June 2009
First light Oct. 09
First DES observations Dec. 09
[End insert from SPIE]

DES Timeline

October 2004	Start DECam R&D and continue the preliminary design
April 2006	Hold preliminary design review, obtain DOE project approval, and place long lead procurements with non-DOE funds
October 2006	Place long lead procurements with DOE funds, begin production processing, packaging and testing of CCDs
October 2008	Complete construction of DECam and Data Management System (DM)
February 2009	Deliver DECam and DM to CTIO
May 2009	Begin commissioning of DECam on the Blanco with the completed DM
September 2009	Begin observations
March 2014	Complete observations

3.2 Total Project Cost Range

3.3 Funding Profile

4 Alternative Analyses *(John Peoples)*

4.1 Analyses of the other CD-0 Options

Option 2: Build a spectrograph to be used on an existing wide field of view telescope for baryonic oscillation measurements. Such a detector would be 10 times more powerful than any yet built and would obtain a massive galaxy redshift survey. The measurements of the variation in baryon particle densities would be used to determine the nature of dark energy at higher redshift, $2 < z < 4$, than is possible with other experiments.

Option 3: Build a next-generation wide-field telescope along with the world's largest optical imaging camera and associated data acquisition system. This concept would allow measurements of galaxy shape distortions caused by weak gravitational lensing to determine the growth of galaxy clusters over time. It is expected that other agencies or institutions would provide funding for the telescope. Such a facility could obtain sequential images of the entire visible sky every few nights and the data collection area would be two orders of magnitude larger than any existing facility. Data will be of use to the larger astrophysics and astronomy community for many different science topics. The data would provide high precision dark energy constraints at the approximately 2 – 3% level.

Option 4: Do nothing. Some progress in the ground-based methods of determining dark energy may be made with existing detectors and facilities in the U.S. funded by other agencies or in Europe.

5 Performance Parameters *(John Peoples)*

In order to meet the science objectives outlined in Section 2.1, DECam must
Obtain images of 5000 square degrees of the Southern Galactic Cap with four filters. Meeting these objectives requires a large CCD camera, optical corrector, integrated filter and shutter mechanism, the 4 meter Blanco telescope, and the electronics and software to integrate DECam with the Blanco (SISPI). As noted elsewhere the Blanco telescope at the Cerro Tololo Interamerican Observatory will be provided by NOAO. The primary detector performance requirements for DECam and the Blanco are:

Table X: Expected performance of DECam, Blanco, and CTIO site

Blanco Effective Aperture/ f number @ prime focus	4 m/ 2.7
Blanco Primary Mirror - 80% encircled energy	0.25 arcsec
Optical Corrector Field of View	2.2 deg.
Wavelength Sensitivity	400-1100 nm
Filters	SDSS g, r, i, z
Effective Area of CCD Focal Plane	3.0 sq. deg.
Image CCD pixel format/ total # pixels	2k X 4k/ 519 Mpix
Guide, Focus & Wavefront Sensor CCD pixel format	2k X 2k
Pixel Size	0.27 arcsec/ 15 µm
Readout Speed/Noise goal	250 kpix/sec/ 5 e
DECam Corrector 80% encircled energy (center/edge)	g (0.32/0.59 arcsec) r (0.11/0.37 arcsec) i (0.17/0.41 arcsec) z (0.31/0.47 arcsec)
Survey Area	5,000 sq. deg.
Survey Time/Duration	525/5 (nights/years)
Median Site Seeing Sept. – Feb.	0.65 arcsec
Median Delivered Seeing with Mosaic II on the Blanco	0.9-1.0 arcsec (V band)
Limiting Magnitude: 10σ in 1.5" aperture assuming 0.9" seeing, AB system	g=24.6, r=24.1, i=24.3, z=23.9
Limiting Magnitude: 5σ for point sources assuming 0.9" seeing , AB system	g=26.1,r=25.6, i=25.8, z=25.4

5.1 Test and Acceptance Criteria Summary

6 DECam Conceptual Design *(Brenna Flaugher)*

The philosophy of the DECam project is to assemble proven technologies into a powerful survey instrument and mount the instrument on an optimally configured Blanco, thereby exploiting an excellent, existing telescope. The major components of DECam are listed in Section 2.2 and Figure 1 shows a cross section of DECam with the key elements identified. A discussion of the Blanco performance and upgrades are given in the Section 4.2. The Survey performance parameters are presented in section 5.

To efficiently obtain *z*-band images for high-redshift (z~1) galaxies, we have selected the fully depleted, high-resistivity, 250 micron thick silicon devices that were designed and developed at the Lawrence Berkeley National Laboratory (LBNL) (Holland et al. 2003). The thickness of the LBNL design has two important implications for DES: fringing is eliminated, and the QE of these devices is > 50% in the *z* band, a factor of ~10 higher than traditional thinned astronomical devices. Several of the LBNL 2k x 4k CCDs of this design have been successfully used on telescopes, including the Mayall 4m at Kitt Peak and the Shane 3m at Lick. The DES CCDs will be packaged and tested at Fermilab, capitalizing on the experience and infrastructure associated with construction of silicon strip detectors for the Fermilab Tevatron program. The CCD packaging plan for the four side buttable 2k x 4k devices builds on techniques developed by LBNL and Lick Observatory.

The optical corrector reference design consists of five fused silica lenses that produce an unvignetted 2.2^{o} diameter image area, which is calculated to contribute < 0.4" FWHM to the point-spread function. Element 1, the largest, is 1.1m in diameter and the surface of another is aspheric. The spacing between elements 3 and 4 will allow the 600 mm diameter filters to be individually flipped in and out of the optical path. DECam will be installed in a new prime focus cage.

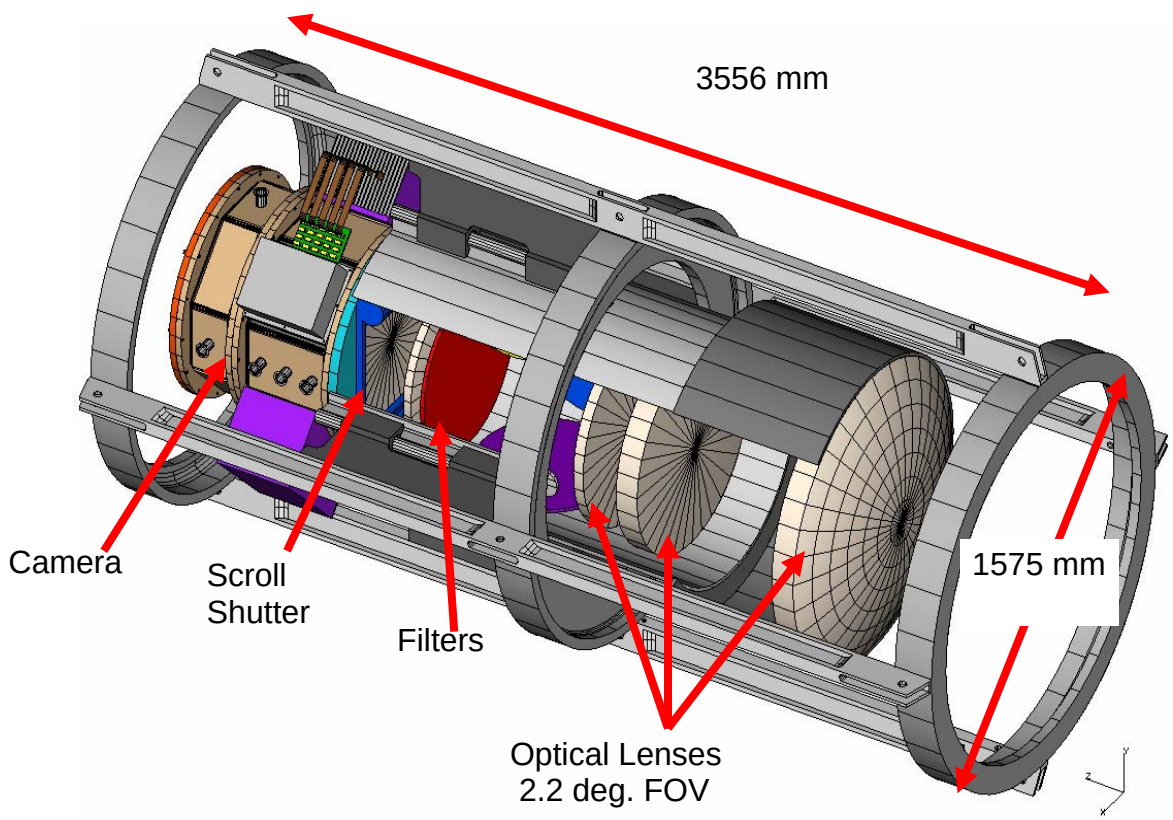

Figure 1: DECam Reference Design

To benefit from the on-going development at NOAO, we have adopted the Monsoon CCD readout system as a starting point. UIUC and Fermilab each have a Monsoon system and are preparing to read out LBNL CCDs in the near future. As we gain experience with Monsoon in the testing setups, we will build on the design and make the modifications necessary to meet the prime focus cage space and heat restrictions.

The risks associated with the optical design result from the size of the elements. We are investigating alternative designs with smaller first elements (~0.9m) and better image quality, with the goal of cost and schedule reduction. We have joined a group organized by George Jacoby to collaborate on the development of large filters for imaging cameras (WIYN, LSST, and PanSTARRS). We are also following the development of large colored glass filters at Schott.

7 Condition Assessments for the Facilites *(John Peoples)*

7.1 Site Selection for DECam Construction

7.1.1 Environmental, Regulatory and Political Sensitivities

No significant environmental, regulatory or political sensitivities are affected by this project. All work done at Fermilab will be in compliance with Federal, state, and local regulations. Environmental protection is integral to all aspects of work performed at Fermilab in accordance with Fermilab's DOE-approved Environmental Management System, which is part of the Laboratory's Integrated ES&H Management Plan. Compliance with the National Environmental Protection Act (NEPA) is part of this system. The DECam Project submitted an Environmental Evaluation Notification Form, on the basis of which a Categorical Exclusion under NEPA, specifically 10CFR1021 Subpart D, App. B3.10 and B1.15, was granted on month, date, 2006.

7.1.2 Location and Site Conditions

7.1.3 Legal and Regulatory Concerns

No legal or regulatory problems are foreseen, and Fermilab has historically completed similar contracts and projects with minimal exposure to claims. The project will be in full compliance with all applicable federal, state, and local requirements. There are no known legal or regulatory issues that could impact the project. The risk of legal and regulatory issues is, therefore, considered small.

7.2 Site Selection for DES Operations

7.2.1 Environmental, Regulatory and Political Sensitivities

7.2.2 Location and Site Conditions

7.2.3 Legal and Regulatory Concerns

8 Safeguards and Security Plan and Vulnerability Assessment

Safeguards and security will be covered under Fermilab's existing DOE-approved program. The DECam Project will create no new security issues during design or fabrication. DECam has no special nuclear material (enriched uranium or plutonium) and no nuclear material (natural or depleted uranium). Thus extra protective measures are not required. Access to Fermilab is controlled to ensure worker and public safety and property protection. None of the work on the DES or on the DECam Project is classified. The risk of safeguards and security issues is, therefore, small. DECam is not an attractive target for terrorists, theft, or malicious action. Therefore, due to the 24/7 security force on site, Fermilab's safeguards and security program, and the non-attractiveness of DECam as a target, the vulnerability assessment is very low.

No laboratory safeguards and security requirements will need to be changed for installation or operations subsequent to project completion.

9 Preliminary Project Execution Plan

The DECam PEP summarizes the mission need and justification of the DECam project, its objective and scope, the Department of Energy (DOE) management structure, the resource plan, and the environmental, safety, and health (ES&H) requirements. In addition, it establishes the technical, cost, and schedule baselines for the project, as well as the DOE Baseline. Change Control thresholds. The DECam Preliminary PEP was submitted to DOE for approval on July xx, 2006.

The DECam project is being carried out by the DES Collaboration. The portion of the work carried out a Fermilab is the responsibility of the Universities Research Association, which operates Fermi National Accelerator Laboratory (Fermilab) under Contract DE-AC02-76-CH- 03000. The UK- Consortium and the DES-Spain Consortium have committed to provide subsystems for DECam as in-kind contributions through MOU's with Fermilab.

The DECam Project Management Plan (PMP), which is a complementary document to this PEP, describes the organization and systems that the contractor will employ to manage the execution of the project and report to DOE. Subsequent changes to the project scope, cost, or schedule exceeding thresholds defined in the PEP will be traceable, and made in accordance with the Change Control procedures described in the PEP.

10 Work Breakdown Structure *(Brenna Flaugher and Wyatt Merritt)*

Table 10-1 shows the DECam WBS dictionary at Level 2. Further details of the WBS are in Appendix A. The project WBS and management structure parallels the project budget structure.

11 Environment, Safety and Health (can we get someone to do this?)

The design, construction and testing of DECam at Fermilab will be performed in compliance with the standards in the Fermilab ES&H Manual (FESHM), and all applicable ES&H standards in the Laboratory's "Work Smart Standards" set. In addition, all related work, including work performed off-site, will be performed in compliance with applicable federal, state and local regulations. All work done at collaborating universities will be performed in accordance with existing university policies and applicable national, state, or local regulations.

Fermilab has implemented policies for Integrated Safety Management (ISM) and Integrated Environmental Management. The ISM Plan is described in Section 11.2.2.*DECam Project Conceptual Design Report* 1 3

11.1 ES&H Organizations

The Fermilab ES&H Section provides ES&H support for all activities at Fermilab, including guidance on ES&H issues, environmental monitoring and safety assessments. The Particle Physics Division ES&H and Building Management Department provides additional support for specific aspects of the experiment. The DECam ES&H Review Committee is appointed by the Particle Physics Division Head to ensure that the project complies with Fermilab ES&H requirements. The DECam ES&H Review Committee is composed of experts in areas such as mechanical and electrical engineering, laser safety, fire protection, radiation and other potential hazards encountered in the construction of detectors for high energy physics experiments. The construction of DECam does not present any new E S & H requirements to the Particle Physics Division. Fermilab follows the principle of Integrated Safety Management. Each person involved in DECam is responsible for following good ES&H practices in the course of his or her own work. However, in addition to these ordinary responsibilities, the DECam Project has an assigned ES&H Coordinator, who directs the preparation of hazard analyses, ES&H reviews, and associated documentation.

11.2 The National Environmental Policy Act (NEPA)

In compliance with NEPA, the DECam Project submitted an Environmental Notification Form, on the basis of which a Categorical Exclusion was granted on month, day 2006.

11.2.1 Safety Assessment Documents

A draft DECam Hazard Assessment Document has been prepared for the project and will serve as the basis for the Preliminary Safety Assessment Document (PSAD) required for

CD-2. Fermilab will develop a PSAD for DECam, which will form the basis for a detailed DECam SAD, identifying and addressing DECam-specific ES&H issues. The SAD will be completed under the direction of the DECam ES&H Coordinator and reviewed as the various construction decisions relating to ES&H are made.

Although the installation of the DECam detector is not part of the DECam project, life safety issues pertaining to the installation and operation of the detector have been considered as part of the life cycle assessment. In cooperation with NOAO, Fermilab has performed an assessment of life safety issues for DECam operations at the Cerro Tololo Interamerican Observatory. The assessment focused on operations at CTIO. ES&H procedures for installing instruments and operating the Blanco Telescope have already been established by AURA, the contractor for NOAO. A Safety Assessment Document (SAD) will be prepared prior to the delivery of DECam to CTIO.

11.2.2 Integrated Safety Management Plan

The DECam Project will be executed in accordance with the principles of Integrated Safety Management (ISM) as specified in DOE P 450.4. While direct implementation of ISM is a line management responsibility, it is also addressed at the project level. The project will prepare an ISM Plan, which addresses the following ISM principles.

11.2.2.1 Defining the Scope of Work, Identifying Hazards

Subproject managers are responsible for planning work, identifying ES&H concerns and resources needed to support the work. The DECam Project staff meets regularly with line and safety managers to discuss planned work and establish priorities. Progress on priority items is tracked and submitted in the monthly report. The project has prepared a Hazard Analysis Document. This document and additional hazard analyses initiated by line management will be in conformance with the FESHM, Chapter 2060.

11.2.2.2 Developing and Implementing ES&H Controls

Applicable ES&H Standards are integrated into all project planning documents. Work processes are documented and reviewed. Where applicable, the project tasks with identified ES&H hazards will specify appropriately trained workers or else the schedule will allow for adequate training. Where possible, the project schedule will allow for dry runs of hazardous procedures.

11.2.2.3 Assessing Performance for Continuous Improvement

The project will undergo periodic ES&H reviews. These reviews may be conducted jointly by Fermilab and the DOE. A Fermilab safety committee will conduct an Operational Readiness Review prior to the delivery of DECam to CTIO. Reviews will generate recommendations that will be addressed by the project in a timely manner. More details on the various reviews DECam will undergo are given in Section 15.

11.3 Waste Minimization/Pollution Identification

Waste Minimization and Pollution Prevention (WM/P2) concepts will be embedded into

all aspects of research and operations at Fermilab. A strong WM/P2 program is an integral part of the Laboratory's Environmental Management System. Fermilab's *DECAm Project Conceptual Design Report* 1 5 WM/P2 Program reflects Department of Energy, national and local WM/P2 goals and policies. It represents an ongoing effort to integrate WM/P2 with our research mission. Fermilab's WM/P2 program is anchored by three tenets commonly associated with pollution prevention objectives. They are Reduce, Reuse and Recycle. DECam is doing all of these in the design process and will continue to during the life of the project and on through the operation of the experiment.

Fermilab has a comprehensive program for the handling, storage, and disposal of both radioactive wastes and hazardous chemical wastes. The various waste programs are described in the FESHM, Chapter 8020. These programs will apply also to waste produced as a result of DECam design, construction and operations.

12 Public and Stakeholder Input *(John Peoples)*

1. Community Use of DECam and Access to Data Obtained with DECam

DECam will be a facility instrument that will be available for use on the Blanco by other observers, who will be selected by NOAO through peer reviewed proposals or through the agreement between the AURA Observatory and the University of Chile. Whenever possible, the policies for the use of DECam on the Blanco Telescope will be consistent with NOAO policy for facility instruments. It is expected that up to 70% of the time could be awarded to observers through the aforementioned processes.

CTIO, in consultation with the CTIO user community, will develop a priority list of filters in addition to those provided by the Collaboration, to enable additional community science. Purchase of these filters, and fabrication of suitable filter cartridges, will be the responsibility of CTIO. The development of calibration and reduction procedures, if different from those developed by the Collaboration and NOAO DPP for the DES, will be the responsibility of CTIO and NOAO DPP.

The Collaboration shall deliver the raw DES data obtained with DECam and the calibrated single images produced from this data by the Collaboration to NOAO DPP 12 months after the individual observations have been taken. The Collaboration and NOAO DPP plan to place the raw data and the calibrated single images in the NOAO Science Archive in order to make them available to the astronomical community. NCSA and NOAO plan to distribute the raw data and the archive-ready data products through an agreement between NOAO and NCSA, using the same NCSA facilities that will be used to distribute these products to the Collaboration. The Parties agree that this arrangement is in accord with the current AURA/NOAO Data Rights Policy. The AURA/NOAO data rights policies shall also be applied to science data obtained with time awarded to other observers on the Blanco with DECam through peer reviewed proposals to NOAO.

The final, public DES archive, which will be finished after the 5-year survey is completed, is the final project deliverable. Maintenance of the final, public DES archive,

which will be part of the NOAO Science Archive, will be the responsibility of the NOAO DPP after it is delivered to NOAO. Further details of the Directors' review and oversight process are given in Section 10 of this MOU.

13 Draft Decontamination and Decommissioning Plan *(Wyatt Merritt)*

[Use boiler plate from Minerva doc?? + the following from NOAO MOU]

Upon completion of the Dark Energy Survey, the DECam will be transferred from CTIO to Fermilab, at Fermilab's expense. Fermilab will return the property contributed by the Collaborating Institutions in accordance with arrangements made with those institutions. AURA will retain title to its contributed equipment. Other arrangements may be made with the interested parties before the completion of the Dark Energy Survey.

Return of DECam hardware to Fermilab will be performed in accordance with any applicable US import control laws and regulations.

14 Preliminary Interface Control Documents *(Wyatt Merritt)*

15 Reviews

A Fermilab Director's Review (June 2004) and an NOAO Blanco Instrumentation Panel Review (August 2004) evaluated DECam, and both reviews identified the yield of the CCDs, the front end electronics (FEE), and the large optics as the major risks to the project cost and schedule. We have focused our R&D efforts on the mitigation of these risks. The Supplements present further details of the R&D program. In particular, we adopted a proven CCD device design and placed the first DES CCD wafer order. The first test devices were delivered to LBNL in early June 2005 and have been successfully read out on cold probe station. We anticipate delivery of the first thinned fully processed devices this fall. The production of the DES devices by LBNL provides an excellent precursor to the production of devices for the SNAP/JDEM project.

16 Project End-State *(Brenna Flaugher and Wyatt Merritt)*

This defines the deliverables to CTIO etc.

At the conclusion of the DOE Dark Energy Survey project, the collaboration will deliver a functional CCD camera, consisting of the CCD focal plane array, associated readout electronics and cooling, an optical corrector and filter/shutter assembly, installed within a cage that can replace the current prime focus cage on the Blanco telescope. This instrument will have passed a set of performance checks which will be agreed between the collaboration and CTIO. (AURA??). There will also be delivery of the SISPI

software. Its functionality and its integration with the Blanco TCS will be demonstrated by…

17 Project Constraints *(John Peoples and Wyatt Merritt)*

JP will try to determine whether there are any project constraints from CTIO that belong here. Wyatt will handle everything from the US, UK and Spain side.

18 Preliminary Plan for the Facilities Being Replaced *(John Peoples and Wyatt Merritt)*

JP will call Alistair Walker and ask them what the will do with Mosaic II. Wyatt should comment on what we will do with various test facilities like the CCD test facilities after DECam goes to CTIO.

KWM: If we are going to be responsible for anything that happens to the CCD test facilities afterwards, that should go in section.13 as part of a decommissioning plan . This is for items the DECam is replacing, so it is appropriate to leave the fate of the MOSAIC II here.

19 Technical Considerations *(Do we need this? Wyatt Merritt)*

Should we just copy Minerva? It is boilerplate except for the examples given of value engineering to date. DES examples of value engineering: reuse of MONSOON designs → lowers project elec eng cost? What else?

Miscellaneous material

One critical characteristic of the dark energy that can be measured is its equation of state parameter **w**. This parameter determines how the dark energy density changes as the universe expands, and this property lies at the root of the bulk of the observable consequences of the dark energy.
The original discovery of dark energy, using type Ia supernovae, was made in 1998 by two teams using ground-based and space-based measurements. The measurement of the brightness versus the redshift of the supernova indicates how much the Universe has expanded since that time. What the scientists found was that the Universe wasn't slowing down as expected, but rather it is speeding up, due to a previously unknown dark energy. The discovery has since been confirmed by a number of methods

Integrated Sachs-Wolfe effect

In addition to these methods, cross-correlation of CMB data sets with DES galaxies as tracers of potential wells will probe the dark energy through the integrated Sachs-Wolfe (ISW) effect; this effect is included in the forecast constraints below (Hu & Scranton 2004). Finally, we note that accurate photometric redshifts are critical to the DES science

goals; as a relatively shallow survey, a major advantage of the DES will be the availability of spectroscopic redshift calibration (training) samples that extend out to the flux limit of the survey.

The Conclusion form the whitepaper

The Dark Energy Survey will employ four complementary techniques to study dark energy: galaxy clusters, weak lensing, galaxy angular clustering, and supernova distances. The statistical reach of these techniques is well understood; in the DES, *each* of them will deliver statistical constraints on dark energy that are stronger than the best *combined* constraints available today (Spergel et al 2003, Tegmark et al 2004, Seljak et al 2004). Moreover, our collaboration is making substantial progress toward identifying and understanding the dominant astrophysical uncertainties and observational systematic errors for each of these methods and one of our important goals is to further explore and develop methods to control these systematic errors. Since the more ambitious surveys of the future will reach even smaller statistical errors than the DES, they will have to exercise even finer control of systematic errors in order to achieve their science goals. We believe that a large-scale, near-term survey that provides a major step forward in precision such as DES is the logical next step in that process.

The DES will employ DECam, a powerful new wide-field survey instrument, and the Blanco, a 4m telescope that has already contributed to many of the pioneering measurements of dark energy and that has the capacity for improvements that will strengthen the DES measurements. As a relatively shallow survey, the DES makes use of source galaxies that are large enough to be well resolved in the conditions routinely achieved with MOSAIC II, the current Blanco imager, and bright enough so that their photometric redshifts can be well calibrated by spectroscopic surveys of comparable depth. The collaboration institutions have a proven record in astronomical data management and have the capacity to manage large data sets. Collaboration members have made important contributions to developing the survey science, and include a strong science team that will rise to the challenge of carrying out the astrophysical and cosmological simulations that will be needed to precisely interpret the data from this large survey. The DES promises significant scientific returns, although it is a relatively low-risk project of intermediate scope and cost, which requires only modest advances beyond the hardware and software used in current astronomical projects.

DES will also provide the astronomical community with a wide field, 4 band digital survey of the southern sky with excellent image quality, uniform photometry and unprecedented depth for its sky coverage. It will cover the largest volume of the universe to date (complete to tens of Gpc^3) and it will be a "legacy survey" that will provide the scientific and educational communities with an extraordinary catalog for multipurpose projects.

DECam supplement

Supplementary material for the DES Whitepaper for the Dark Energy Task Force
Revision from Brenna Flaugher on June 11, 2005

The 2004-2006 R&D Program

The primary goals for the 2004-2006 R&D period are focused primarily in three areas: CCDs, optics and readout electronics. For the CCDs we need to establish the yield, learn to test and characterize CCDs, and to demonstrate packaging that meets the optical and electrical requirements of the survey. On the optics we will finalize design and develop a firm cost and schedule estimate. On the CCD readout electronics we will develop CCD testing systems and use these to prototype the full prime focus cage camera readout system and components. Below we discuss these three efforts in more detail. During this period we are also developing other aspects of the project such as the focal plane cooling system, the thermal control and packaging of the front end electronics, shutter and filter changing mechanisms and the integration of the DECam data acquisition and controls with the systems at the Blanco. These efforts are going well and will not be included in the discussions below.

Procurement of quality CCDs has historically been the most difficult part in the construction of a focal plane. For DES we need 62 science grade devices plus spares and this presents probably the most significant challenge to the project. To meet the science goals of reaching high red shifts in a reasonable amount of time we have chosen to use 250 micron thick fully depleted devices that have been developed by LBNL. As shown in Figure 1, these devices are roughly a factor of 10 more sensitive in the z band than the SITE devices in the Mosaic II Camera. Other sources were investigated but did not meet our performance, price and schedule requirements.

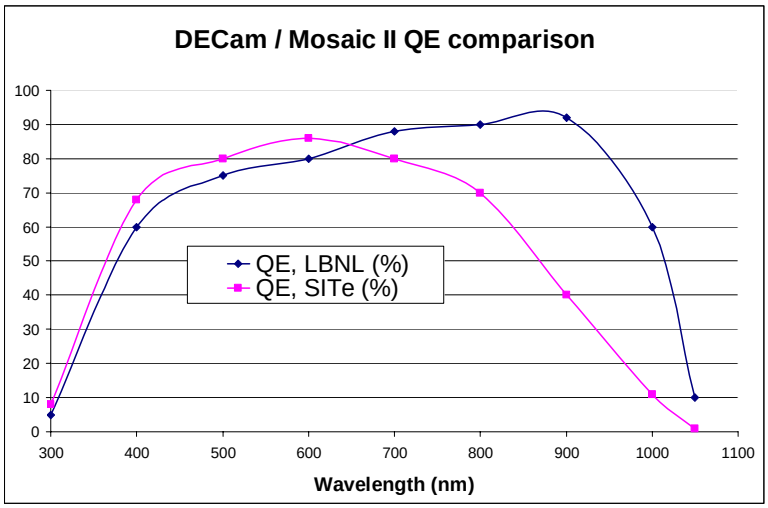

Figure 1 Quantum Efficiency of LBNL CCDs compared to the devices in the Mosaic II camera currently on the Blanco.

LBNL has been developing CCDs in their Micron Systems Lab since the early 1990's. Thick, fully-depleted CCDs fabricated at LBNL have been deployed on instruments at several ground based telescopes, including the Multi-Aperture Red Spectrograph at Kitt Peak and the Hamilton Echelle Spectrograph at Mt. Hamilton, and have enabled science in several areas including planet hunting, spectroscopy of very distant quasars, Seyfert galaxy black holes and Type Ia supernovae. Most recently the effort at LBNL has been focused on development of devices for the SNAP/JDEM project. The device format that is ideal for DES is a 2k x 4k array with 15 micron pixels. CCDs in this format have already been fabricated by LBNL and are presently being packaged at UC Lick for use on the LRIS spectrograph on Keck.

LBNL has developed a business relationship with a commercial vendor to reduce the processing load on the MSL and to increase production throughput for SNAP. In the SNAP business model, the vendor, DALSA, performs 8 out of the 11 mask steps. The automatic processing equipment at DASLA is unable to handle devices less than 650 microns thick. A small number of wafers (3-4) are completely processed as thick devices for quality control. LBNL receives the wafers and subcontracts mechanical thinning to 250 microns thickness. LBNL then performs the last three mask steps and applies the backside coatings. The wafers are tested on a cold probe station and then sent out for dicing. LBNL anticipates a delivery rate of 5 wafers/month following an initial 3 month startup phase. DES will occupy about 25% of the production capacity of MSL. The 250 micron thick, fully processed die are delivered to FNAL for packaging. Note that unlike the typical 20 micron thick astronomical CCDs, the LBNL CCDs do not require any processing after packaging.

The CCDs will be packaged at FNAL using a 4-side buttable design similar to the design developed by LBNL and the LICK Observatory (Richard Stover). The CCDs are glued to an Aluminum Nitride board which is a good match in thermal expansion properties to the Silicon. The AlN board contains pads for wirebonding to the CCD readout pads and traces to a connector footprint. Molybdenum has been chosen for the CCD foot material as it is a good match in terms of thermal expansion to the CCDs and has better thermal conductivity than Invar.

The CCDs will be tested and characterized at Fermilab in a CCD testing facility. We have begun construction of one CCD testing setup. This includes fabrication of a Dewar that can cool and precisely maintain one CCD at a specific temperature (typically 180 K) and the purchase of equipment that can test the CCD optically and with an Fe55 source.

The first step in procurement of CCDs for DES was the design of a new 6" wafer mask containing four 2k x 4k devices for the image CCDs, one 2k x 2k device for guide and focus, and eight small devices that fill the remaining space and can be used for initial testing system checkout. The mask used to produce the earlier devices only contained two 2k x 4k devices and was not cost effective for DES. The mask design was completed in March and submitted to DALSA for fabrication. The minimum order with DALSA is for a 24 wafer lot. Fabrication of the first DES wafers began in early April. By mid April a problem with the wafers was discovered (4 of them had large chips on the

edges). DALSA suspended processing of this lot and began a new lot. This second lot was completed in mid May. During the final Quality Assurance testing, a higher than normal particulate count was found on the wafers. SNAP has seen similar particulate counts and has found that these devices tend to operate normally, but with an increase number of channel blocks. DALSA has agreed to give this lot of wafers to DES free of charge and to begin a new lot once the source of the particle contaminant has been found. These wafers were delivered to LBNL in early June. The thick fully processed devices will be tested on a cold probe station in the next week and could indicate if the mask design was successful. Thinning and processing of 5 wafers will take ~ 12 weeks at LBNL and thus we should have the first thinned fully processed devices by mid September 2005. We expect that these devices will be sufficient for development of the CCD packaging and testing procedures and will provide valuable experience prior to delivery of the new wafers.

The CCD yield is affected by wafer processing as well as packaging and testing criteria. Based on their experience with a small number of SNAP devices, LBNL has estimated that the CCD yield will be ~ 25%. We anticipate that LBNL will need to process ~ 80 wafers (20 in the first lot + 60 in the full order) to obtain 70 science grade devices. Fermilab will use the wafer probing results to direct which CCDs should be packaged. We plan to have parallel CCD packaging and testing equipment and personnel to keep up with the delivery rate from LBNL. Note that DES has adopted a multiple, partially overlapping tiling strategy that eases the requirements on the number of bad pixels and columns. As we gain experience with the LBNL CCDs and develop a better understanding of the detailed requirements, we will adjust our CCD classification scheme.

The DES project provides a useful precursor for the SNAP CCD production process. DES will be the first high quantity application for LBNL MSL CCD processing. Success with the DES production will provide a demonstration of capacity for production of SNAP CCDs.

Low noise and reliable CCD readout is essential for obtaining the science results of the DES. The large focal plane naturally leads to long cables and a high potential for noise pickup. The location in the prime focus cage puts severe restrictions on the space and allowed heat dissipation. Although Fermilab has many years of experience building silicon strip detectors for the Tevatron Collider program, there is limited experience reading out CCDs. To get a jump start on learning to readout and test LBNL CCDs we borrowed a CCD readout system from The Amateur Sky Survey (TASS) project. In October 2004 we used this system to readout a standard CCD and by Feb. 2005 we had managed to readout and detect a comic ray in an LBNL CCD. In addition, DES has developed a close collaboration with the CCD readout experts at NOAO/Tucson and at CTIO. A week long workshop was held in March in which the various options for DES front end electronics were discussed. This meeting provided face-to-face meetings between the electrical engineers at Fermilab, CTIO, NOAO/Tucson and Barcelona and it built the basis for detailed involvement by all parties in the development of the CCD readout systems for DES.

As a result of the workshop, DES decided to adopt the Monsoon CCD readout system that has been developed by NOAO to capitalize on the effort and experience that has already gone into this design. UIUC has led the effort to acquire the Monsoon hardware and we currently have one system at FNAL and one at UIUC. This system will initially be used for the CCD testing stations. We expect to be reading out an LBNL CCD with Monsoon in the next few weeks. UIUC is also pursuing options for a compact design for the crates, power supplies their associated thermal control. We have already determined that the density of the existing Monsoon CCD Acquisition board must be increased from 8 to 12 channels to meet the space requirements of DES. Engineers at Fermilab are working with NOAO on ways to rearrange the components to find space for the additional channels. As we gain experience with the Monsoon system in the CCD testing setups, we may determine that modifications are needed to the Clock and Bias board and/or the Master Control board. The group from Barcelona plans to become directly involved in the development of these boards starting this fall and will ultimately take a large portion of the responsibility for the fabrication of the production components.

The DES 2.2 FOV corrector optics are challenging, but not unprecedented. The design includes large optical elements (the first one is 1.1m diameter and has such a high radius of curvature that it must be melted to roughly the right shape (slumped)) and one aspheric surface. Technology for this design exists but the number of vendors is limited to ~3 and the polishing these lenses is a time very consuming process. The UCL group contains an Optical Science laboratory that has extensive experience in the manufacturing and procurement of optical components. We have also recently added groups from The University of Michigan with an experienced optomechanical engineer. The current design of the corrector was developed by Steve Kent and Mike Gladders over a year ago. The UCL and The University of Michigan groups are currently reevaluating that design and looking for ways to optimize it in terms of performance and manufacturability and cost. We are planning to have an optical design workshop at Fermilab July 6 and 7. Alternative designs will be evaluated and considered.

Detailed DES Timeline:

FY05 R&D 1st CCD run: verify CCD masks (4 2k x 4k devices/wafers)
- Develop CCD testing facility and expertise
- Develop CCD packaging
- Optimize and finalize optical design

FY06 R&D 2nd CCD run: establish firm estimate of the yield
- Optimize and expand CCD testing facilities to deal with production quantities
- Develop full prototype of Front End electronics and Image collection systems
- Verify slumping of the 1st corrector element maintains optical properties

FY07 Construction
- Production processing of CCD wafers at LBNL
- Production CCD packaging and testing

	Polishing of optical elements
	Production CCD readout and image assembly system
	Camera vessel construction
FY08 Construction	
	Complete CCD production, packaging and testing
	Assemble and test full focal plane
	Assemble and test optical corrector
FY09	Assemble and test entire DES Instrument (camera, corrector, electronics, data handling, focus, cooling etc.)
	Ship to Chile and install on Blanco.
	Ready for operation June 09
	First DES observations Oct. 09

Blanco supplement

Blanco Telescope (from A. Walker and T Abbott v4, June 14, 2005)

The Blanco 4-m telescope is sited at Cerro Tololo Inter-American Observatory – one of the world's premier observing sites. It is a wide-field Ritchey-Chrétien design, the f/2.7 prime focus has been exploited over the past two decades with a series of wide field CCD imagers and optical correctors – the combination of which has made the facility the southern hemisphere's (and at times the world's) leader in optical imaging as gauged by the metric $\varepsilon A\Omega$ (efficiency × aperture × detector area). The critical observations leading to the discovery of *Dark Energy* were made with this telescope, and several other important surveys have been completed or are underway using the prime focus 8K×8K Mosaic II Imager. This instrument is presently scheduled for over 60% of the telescope time.

At its time of construction 30 years ago the quality of the Blanco telescope primary mirror defined the state of the art and the surface quality has only been exceeded in the last decade with the advent of super-polishing. The values of the enclosed energy as a function of diameter as measured during the testing of the Blanco primary at the time of its acceptance is given below.

Enclosed Energy	Diameter in arc sec
57%	0.15
80%	0.25
94%	0.40
99%	0.50

The Cerro Tololo observing site has a median image quality of 0.65 arc seconds. The site seeing together with the primary mirror quality should in principle allow the Blanco together with DECam to deliver excellent quality images, limited primarily by atmospheric seeing.

The median delivered image quality, corrected to V-band and zenith, for long exposures with the prime focus Mosaic Imager is 0.9 – 1.0 arcseconds, and the DECam-Blanco combination will do better. This performance is the result of substantial improvements that have been made to the telescope and its environment, most of these in a series of upgrades that were initiated a decade ago. In brief, the telescope thermal environment was improved by large ventilation doors at the telescope level to promote more efficient flushing of the dome, by several air ventilation subsystems designed to optimize the temperature of the primary mirror and telescope structure, by covering the telescope dome with thermally insulated aluminum panels, by attending to thermal management throughout the building, and by installing a servo-control to optimize the system. At the same time, active optical control of the primary and secondary mirrors was introduced so that the intrinsic quality of the telescope optics could be effectively utilized; however closing the loop was possible only at the f/8 focus, where a wave front sensor was installed

Although all Dark Energy Survey simulations have used current performance characteristics, the Cerro Tololo observing site itself has median image quality of 0.65 arc seconds, and thus there is still room for improvement of delivered image quality. Many improvements will be made through DECam itself, but a number of additional upgrades and enhancements will be applied to the telescope and dome in order to maximize DECam's potential:

(i) The primary mirror active-optics control loop will be closed by installing wave-front sensor CCDs as part of the DECam focal plane. The method to be used will probably be a variant of curvature sensing (the donut method) now under development at CTIO for the SOAR telescope. This will improve the focus and point-spread function stability.

(ii) Metrology of the prime focus mirror as a function of sky-position has shown that the mirror moves in its cell by an amount sufficient to introduce detectable coma. The probable cause has been identified and a definitive fix is in development to be installed later this year.

(iii) Relative motions of the prime focus cage sag and primary mirror due to telescope flexure will be measured and checked against an FEA model to estimate the need for active compensation to be built into DECam to further improve optical performance.

(iv) The existing Mosaic imager has no thermal control. A full thermal management model for DECam will be developed, and thermal control equipment will be implemented, including glycol lines and air ducts as necessary to make the instrument as thermally neutral as possible. Cooled environments for instrument electronics, and for off-telescope equipment such as a cryocooler compressor will be provided.

(v) The existing environment control system will be evaluated, and options developed for improving the thermal properties of the telescope and dome. A cost-benefit analysis will decide which of the proposed options will be implemented.

(vi) The telescope control system (TCS) will be upgraded or replaced, prior to the delivery of DECam. This will improve reliability through replacement of aging systems and improve performance in areas critical to the Dark Energy Survey – in particular, investigations have shown that it is feasible to drive the telescope the required 2 degree step between DES fields within the readout time of the camera (~17s) so that telescope slews do not limit survey efficiency.

(vii) The existing prime-focus optical corrector is thought to have degraded optical performance compared to its design, particularly as one element is damaged. DECam will come with a new optical corrector with modern design features not previously available, including SolGel coatings.

(viii) The existing Mosaic imager is refocused by interrupting observations and defocus limits delivered image quality in good observing conditions. DECam will incorporate contemporaneous focus control on the same cadence as the survey imaging, eliminating these issues.

(ix) DECam's larger imager area, faster readout (Mosaic II: 100s, DECam: <20s), better observing tools and real-time quality control will radically improve imaging observations at CTIO for the entire community.