Challenges for (Mu2e)at FNAL

R. Bernstein
FNAL
6 June 2008

Executive Summary

- ***MECO is a solid foundation***
  - did careful simulations of every background they could think of
  - extensive engineering studies
- ***This experiment is ready for Stage 1 Approval and CD-0 (mission need).***
  - A CDR exists for CD-1 – read the MECO Magnet CDR or draft TDR – but there are many more DOE requirements for a project of this level.
- ***Not ready for CD-2 cost & schedule baselining***
  - need to optimize design choices especially in light of Project X
  - everything is open: *value engineering*
- ***Rate of progress determined by (people + $) !***

Help Wanted!

- **Beam:** *extinction factor*
- **Tracking:** *L–tracker vs. T-tracker*
  - construction, resolution, mis-reconstruction
- **Calorimeter:** *material and photodetectors*
- **Software:** *need unified framework so we can answer these questions!*
  - backgrounds, resolutions

Things I'm Leaving Out

- Detailed beam design of extraction, transport, etc. in Booster, Recycler, Accumulator/Debuncher
- Nothing about solenoids (1/2 – 2/3 of TPC)

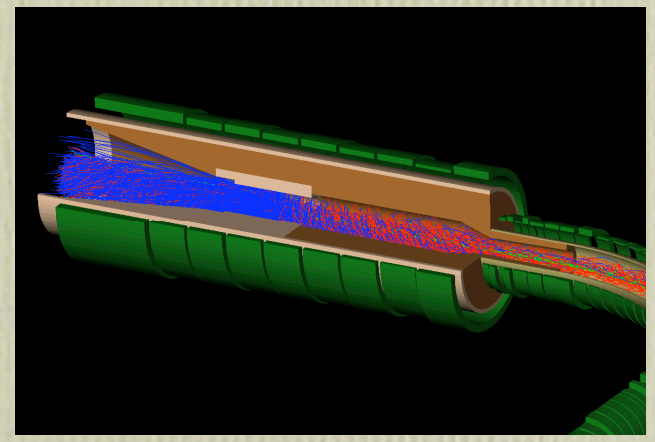

modify design of Production Solenoid for Project X

- Nothing about optimization of stopping target
  - how many? graded radii?

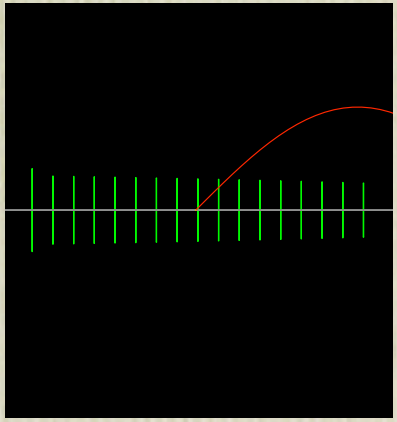

Extinction

- Need Out-of-Time/In-Time protons < 10^{-9}
- Must do detailed MC of scraping in collimators as beam moves across

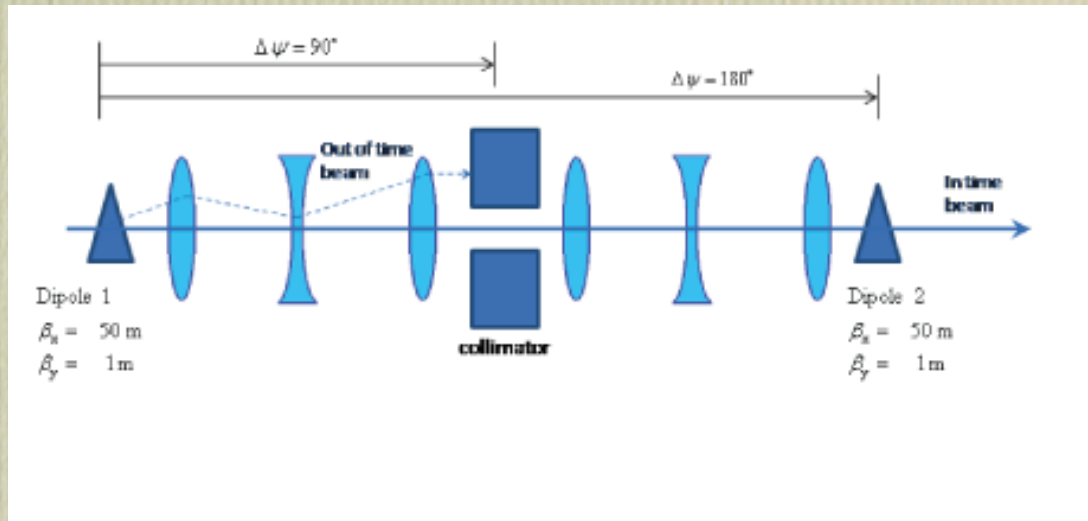

•Coupled to simulation of detector: what backgrounds are important?

Detector and Tracking

- Aluminum Disks as stopping target
- Immersed in 10 kG magnetic field along *z*-axis
- Electron Spirals along, eventually hits calorimeter
- Only <0.3% of e- from DIO background are seen

L-tracker version: one of two, and that's the point: both work, which is better?

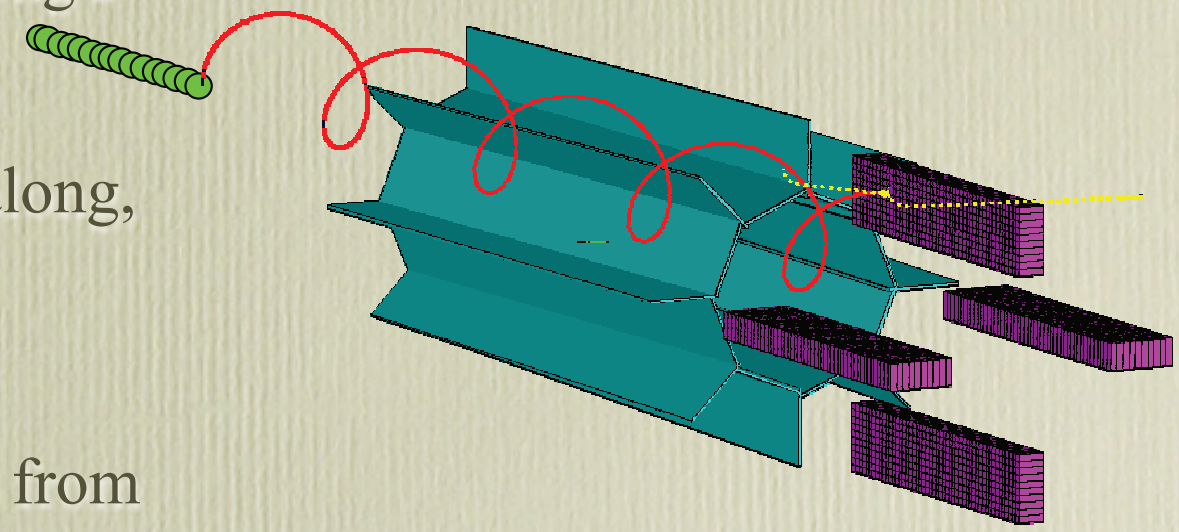

Alternative Tracker

- T-tracker (T for transverse):
- 260 sub-planes
  - sixty 5 mm diameter conducting straws
  - length from 70-130 cm
  - total of 13,000 channels
- Planes rotated 30 degrees around in sets of 12

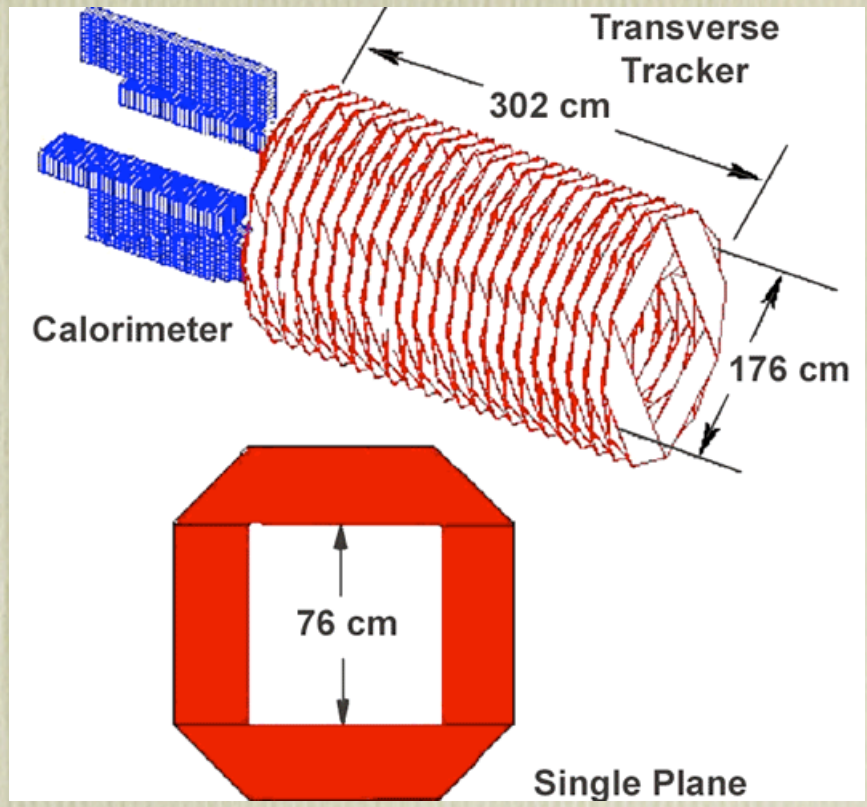

Tracking: L–Tracker vs. T–Tracker

- L-Tracker: straws along beam
  - Conceptually simpler tracking
  - Basis of MECO
  - Where does support/ infrastructure go? Material in electron path
  - Can anyone build straws 0.5 cm × 2.6m and operate in vacuum –no leaking!
- T-Tracker: straws perp to beam
  - More prone to pattern recognition errors?
- Active Investigation:
  - Kalman filter/Hough Transform, applied to both trackers on same events
  - work just beginning
  - help welcome!

L-Tracker Reconstruction

- Extra hits from DIO, noise, other backgrounds
- Uses ln likelihood of helical track segments

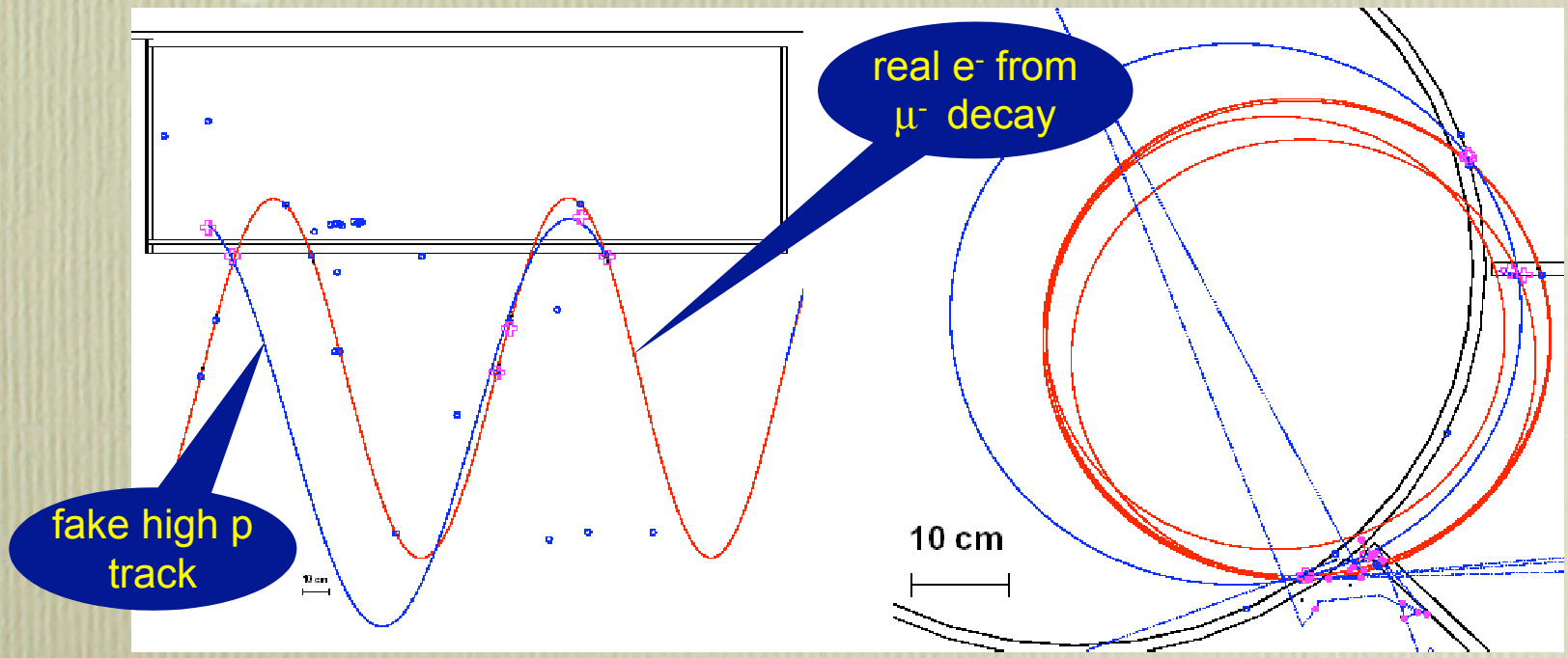

T-Tracker Reconstruction

- Obviously more complicated!
- Kalman filter algorithm: R. Djilkibaev and R. Konoplich, hep-ex/0312022

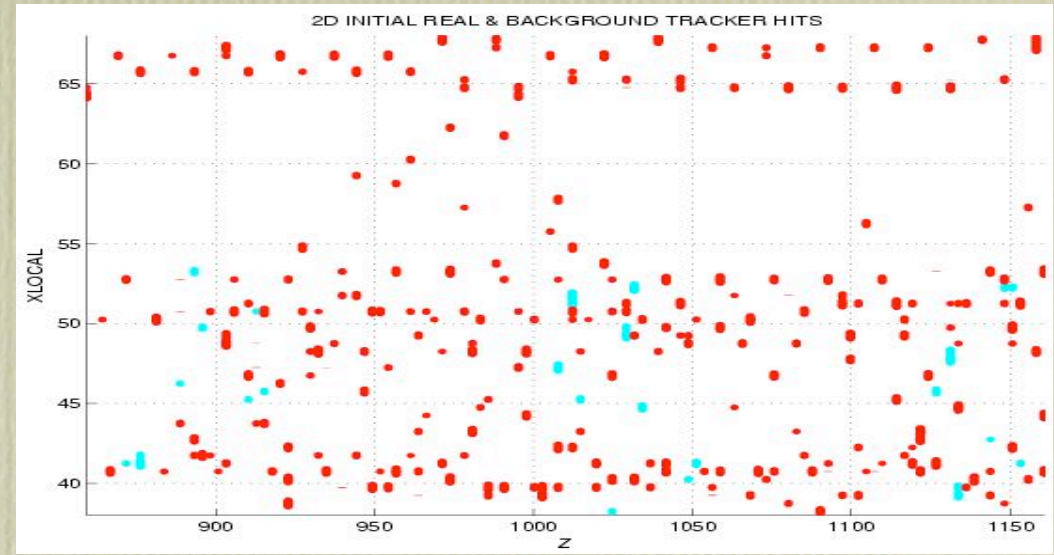

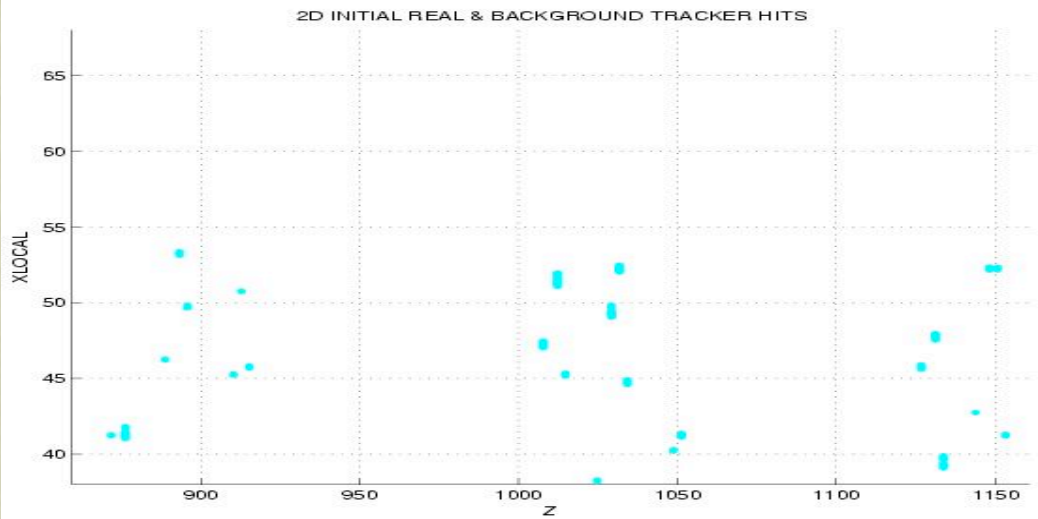

L-Tracker Resolution

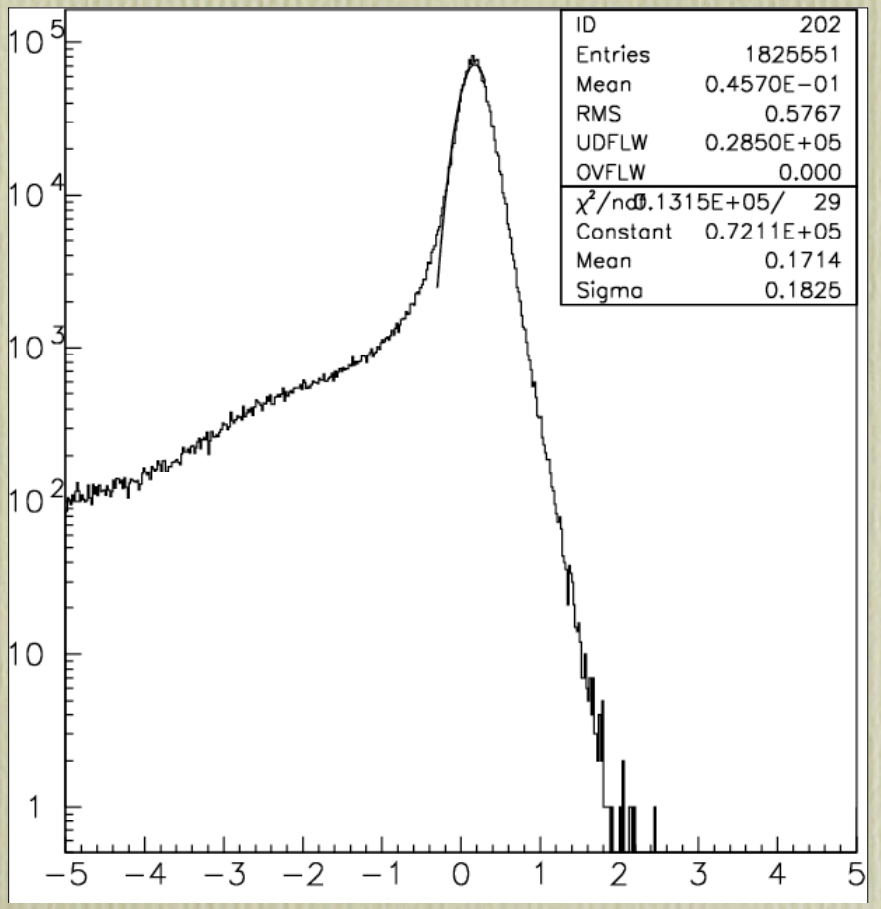

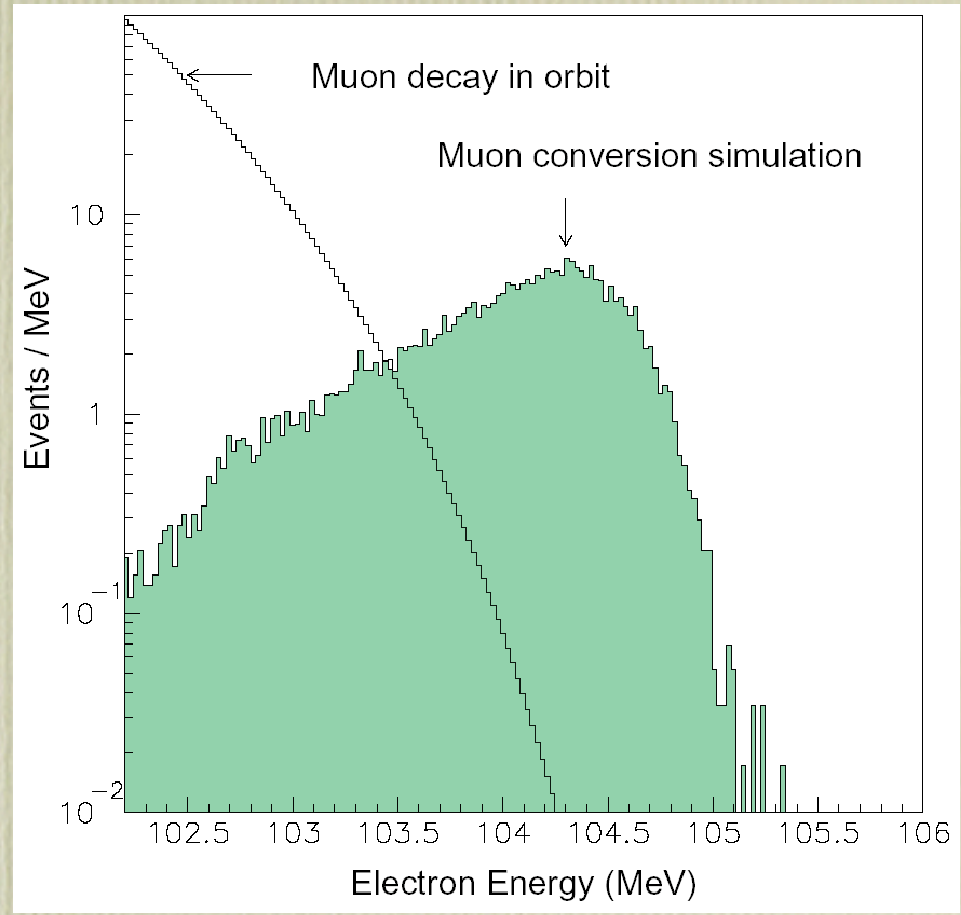

For B($\mu \rightarrow e$) =10^{-16} : 5 signal and 0.25 DIO background in the signal region:

so this works

T-Tracker Resolution

and so does this: which is better?

- T-tracker seems better on high-side tails
  - seems counterintuitive
- Need head-to-head comparison with same events, better algorithm, etc.
- This has not been done
- No single code suite!

uses Kalman filter

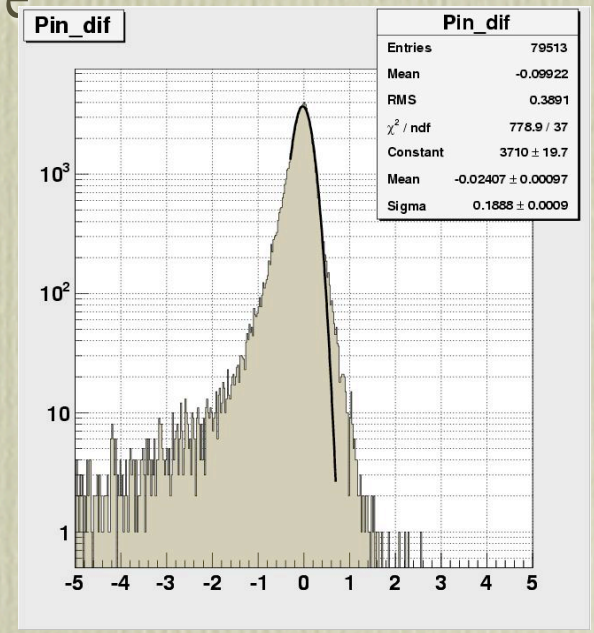

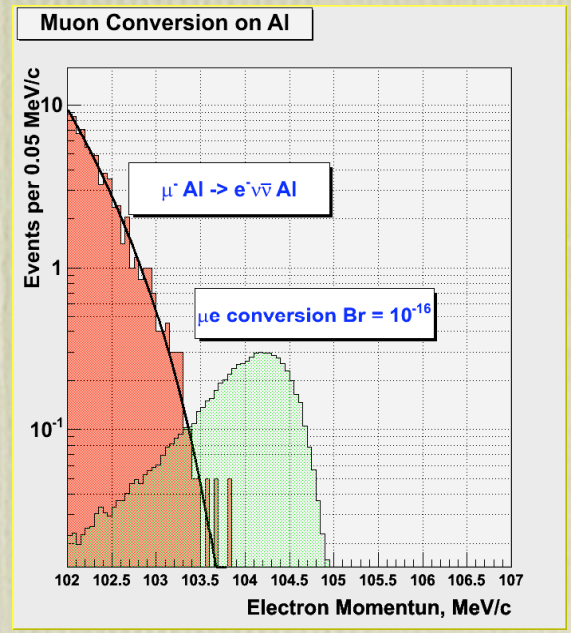

Calorimeter

- Lead Tungstate design
  - Is this best? cheapest? most available?
- Better electronics nowadays
- How many vanes? Or a single plane?
  - note calorimeter "inside" tracker
  - shields outer cells
  - is that optimum?

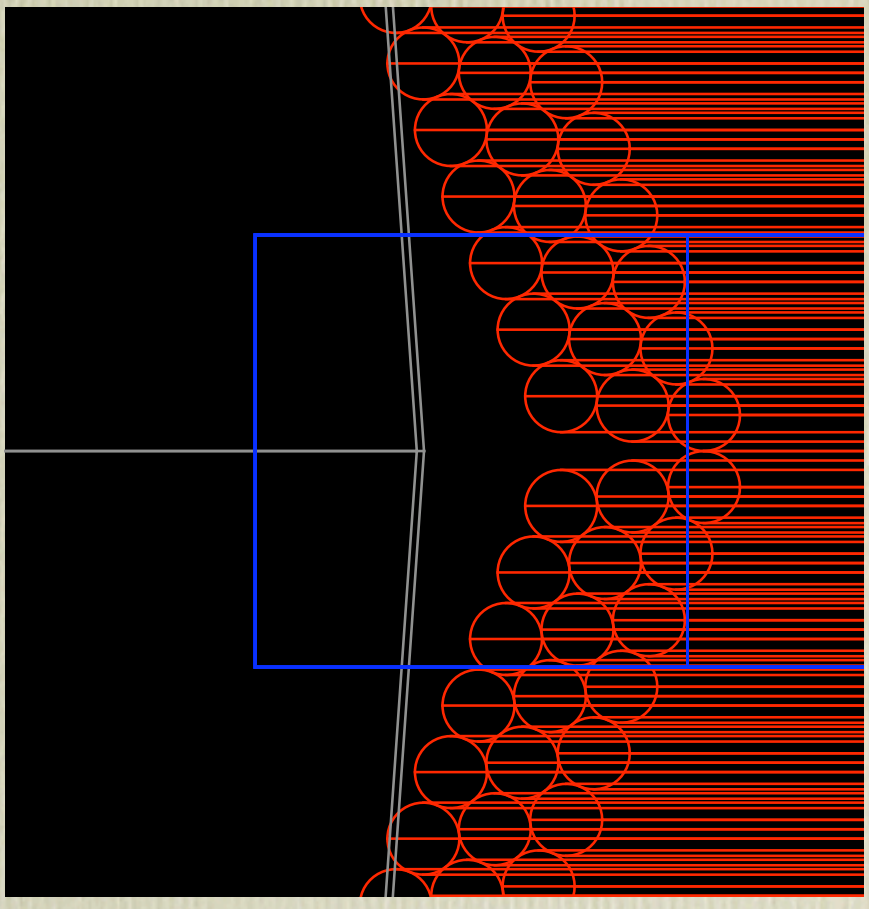

Still More…

- Cosmic ray veto system- candidate system has been proposed – needs to be developed (keep out extra hits and spurious tracks)
  - a challenge to get to 99.9% efficiency, 4π coverage
- Calibration systems for all detectors
- Muon stopping rate monitor– Measure x-ray rate from muonic aluminum
- Solenoid magnets (big project): joint effort of physicists and engineers. Initial design work done, needs further development for full design.
- Develop readout electronics for calorimeter, tracker, cosmic veto,…

Huge Return on Investment for Simulation Work

- Moving to GEANT4 has not been easy or painless and there will be more pain to come – ask people across the hall who have to listen to me curse at the terminal

- Taken me about 1 FTE month since Feb to get this far and I have some C++ experience (few K lines in NOνA)

- But this is the right answer in the long run and the more of us can do it the easier it will be for new people

targeted effort with CD would have enormous leverage

Conclusions

- MECO had a solid, working base design but everything is wide open for improvement
- Major need for unified software suite in GEANT4
- Need to develop tracking
- Many, many hardware and design choices for optimizing experiment
- Need updated background estimates
- Every single item needs to be thought about in terms of ×100 upgrade for Project X

rhbob@fnal.gov or miller@buphy.bu.edu