LARP

LHC Accelerator Upgrades

S. Peggs

LARP status & recent progress

Phase 1 & 2 upgrades

IR Upgrade PROJECT (IRUP)

Goals of LARP Collaboration Meeting CM8

1) .....

2) .....

3) .....

4) Discuss potential U.S. contributions to a "full upgrade" of the IRs in about 2015, & LARP R&D strategy in support.

We are at a turning point, not just because of commissioning ....

- next instrumentation suite?
- Long Term Visitors? Level of funding?

.... but also because the binoculars are out ....

- CERN discussion of phase 1 & 2 upgrades
- DOE: synchronous CD-0's for LARP, CMS, ATLAS?

Some long range planning is due – the 5 year plan

LARP status & recent progress

Lumimonitor installation (January 07)

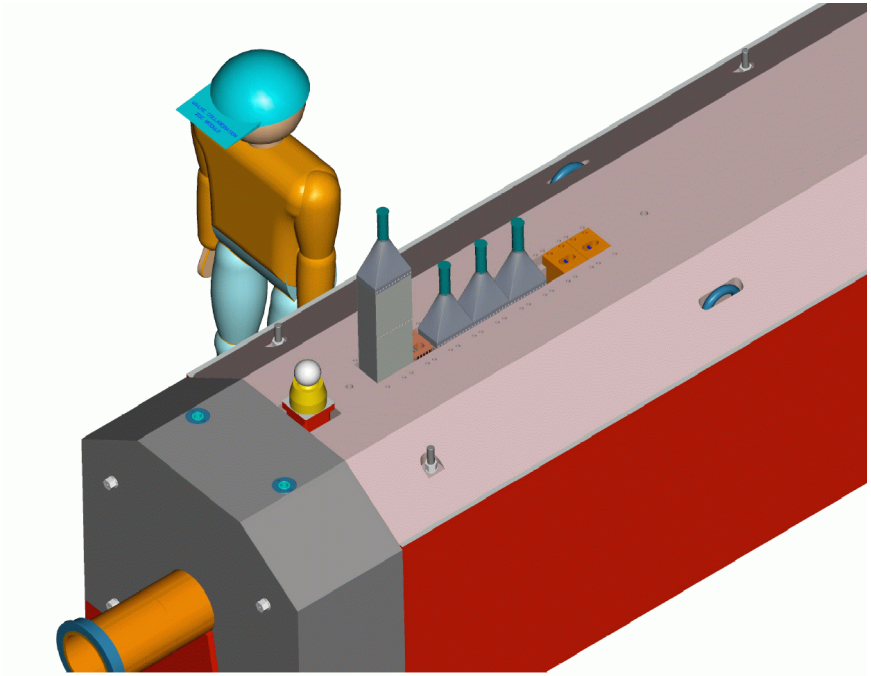

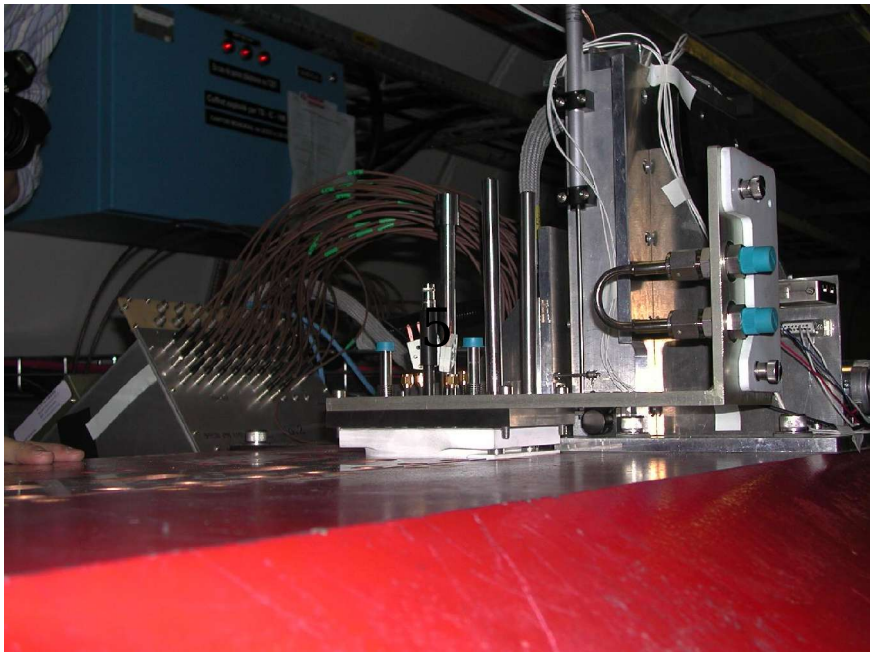

Top, Left: LHC tunnel

A test monitor has also been installed in RHIC, and is taking data “today”

Synergistic cross-calibration with standard ZDC lumimonitors

Beam-beam (long range) wire compensators

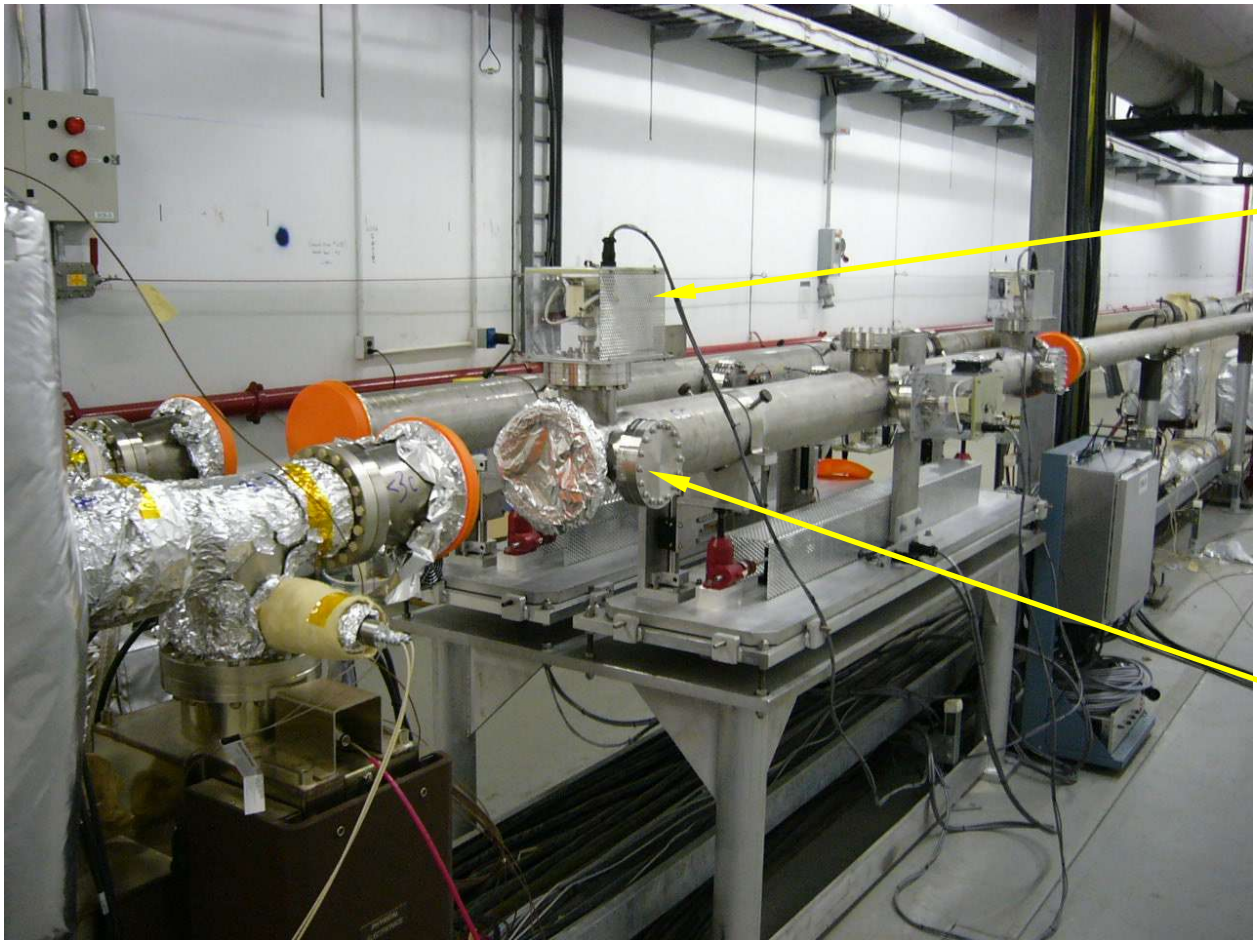

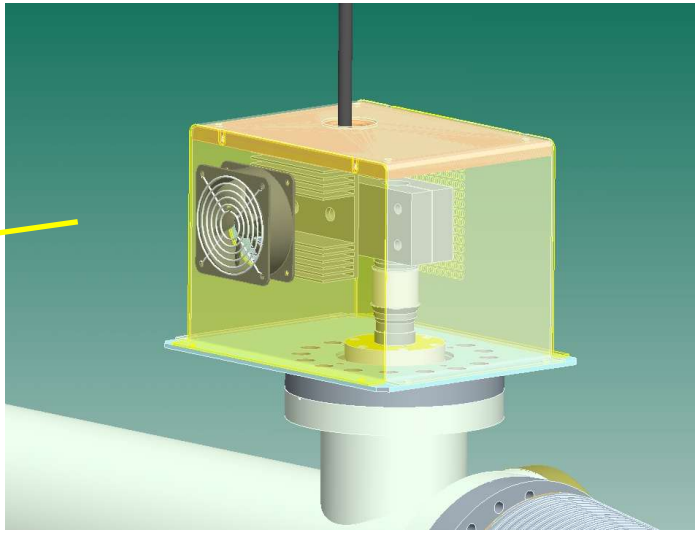

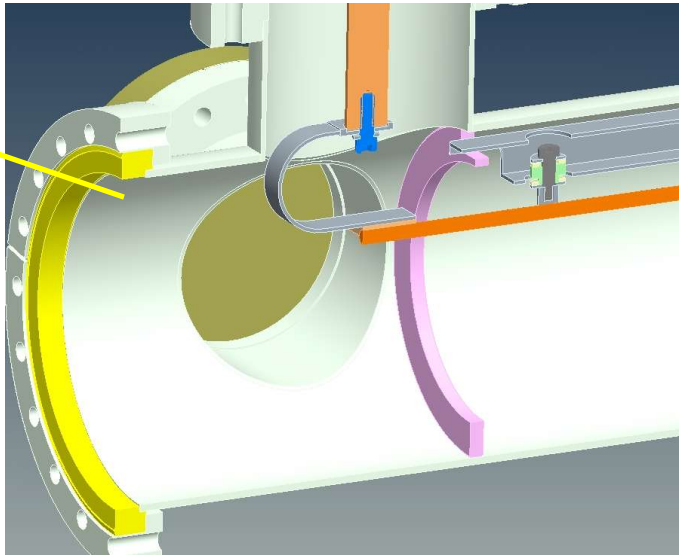

2006 RHIC studies without BBLR

2007 With 2 DC BBLR wires

2008 With AC (pulsed) wires

Chromaticity feedback progress

BLACK: H chrom.
BLUE: V chrom.

Chromaticity has been successfully measured with TF loop closed

Ramping with chromaticity feedback planned for April 25 studies ...

AFTER feed forward (in a 5 minute ramp)

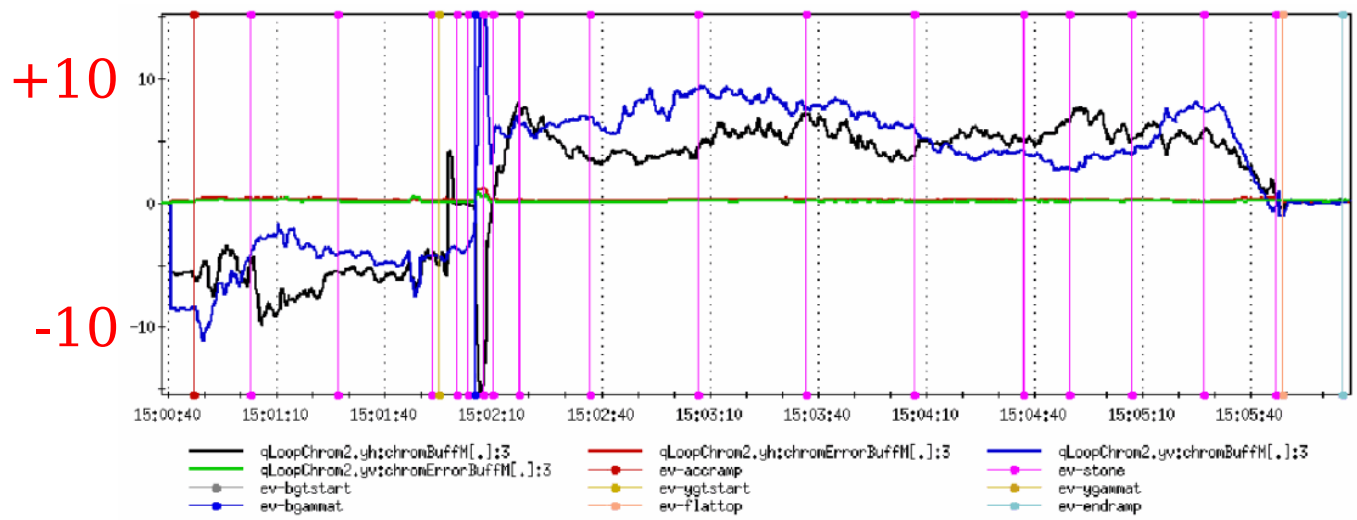

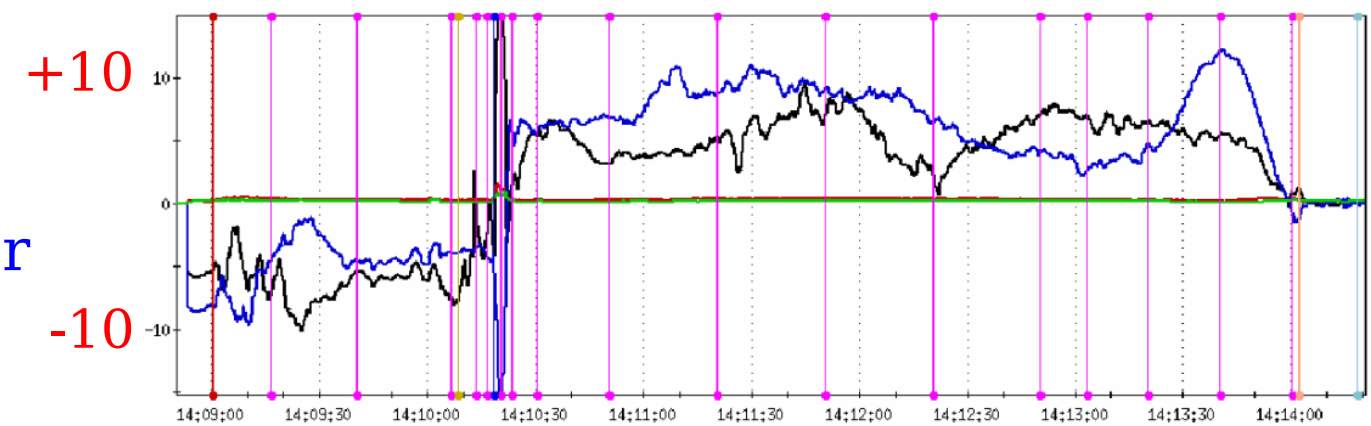

BEFORE feed forward

Magnet strategy to 2009 – one goal

Pre-eminent goal: Demonstrate that Nb_3Sn magnets are a viable choice for an LHC IR upgrade 2009

TQ Technical Quad (1 m, 90 mm, 200 T/m)

- TQC01,2 & TQS01 achieved gradients close to 200 T/m
- Current emphasis is on mechanical & conductor issues
- Going well, overall ...

LQ Long Quad demonstrator (4 m, 90 mm, 200 T/m)

- Length scale-up critical with brittle coils
- On track for technology choices in CY07:

  Coil: 2D design

  Mechanical downselect: Collared, Shell or Hybrid?

Technical quad TQS01

Measure stress evolution during cool-down, in case changes are necessary (disassemble & reassemble).

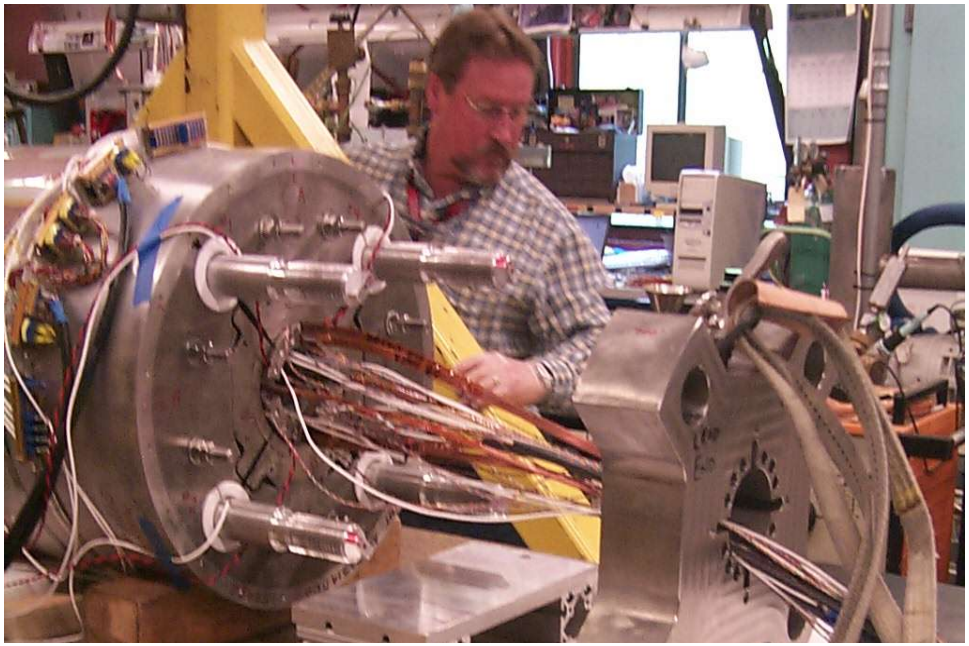

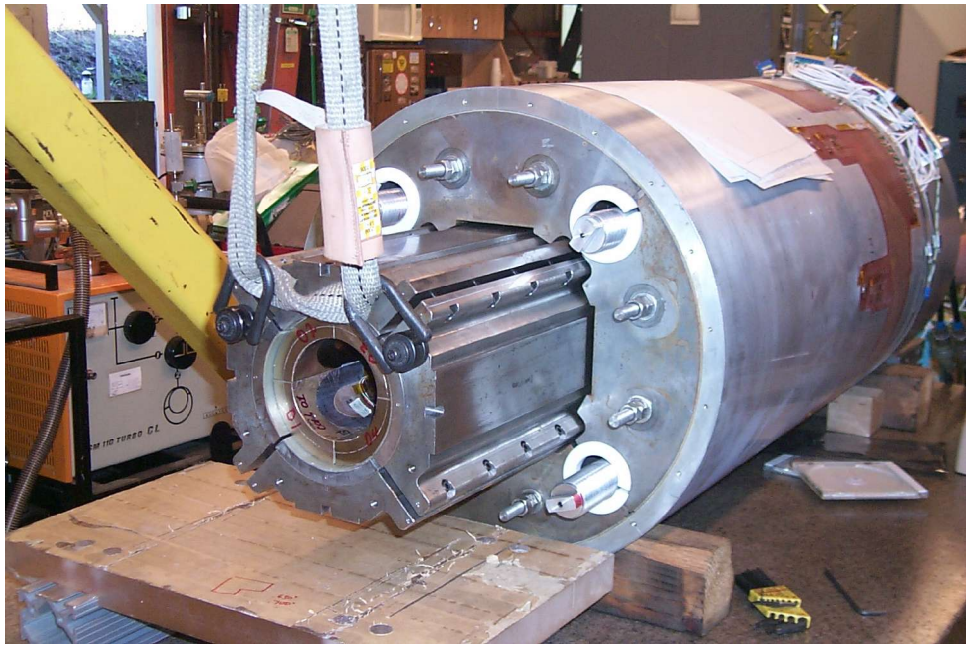

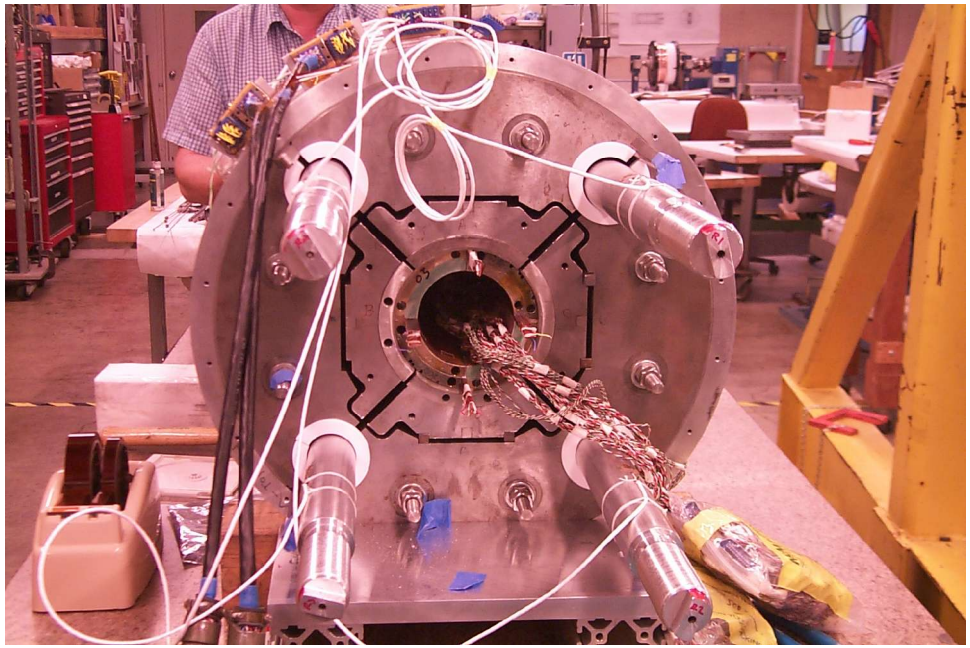

TQS01 test data (March 07)

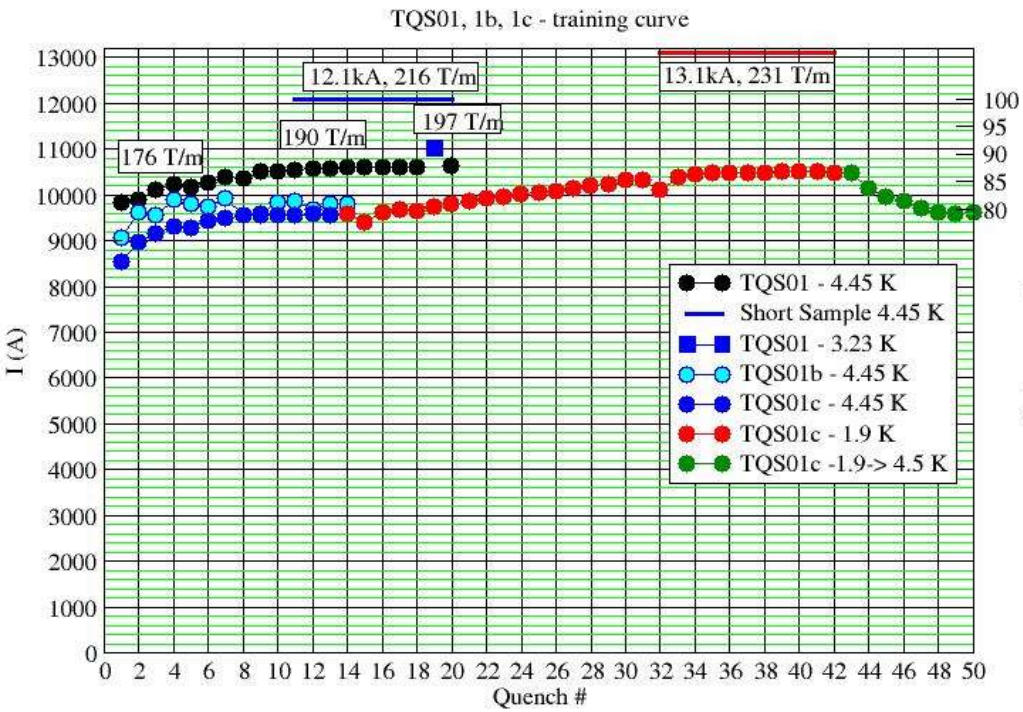

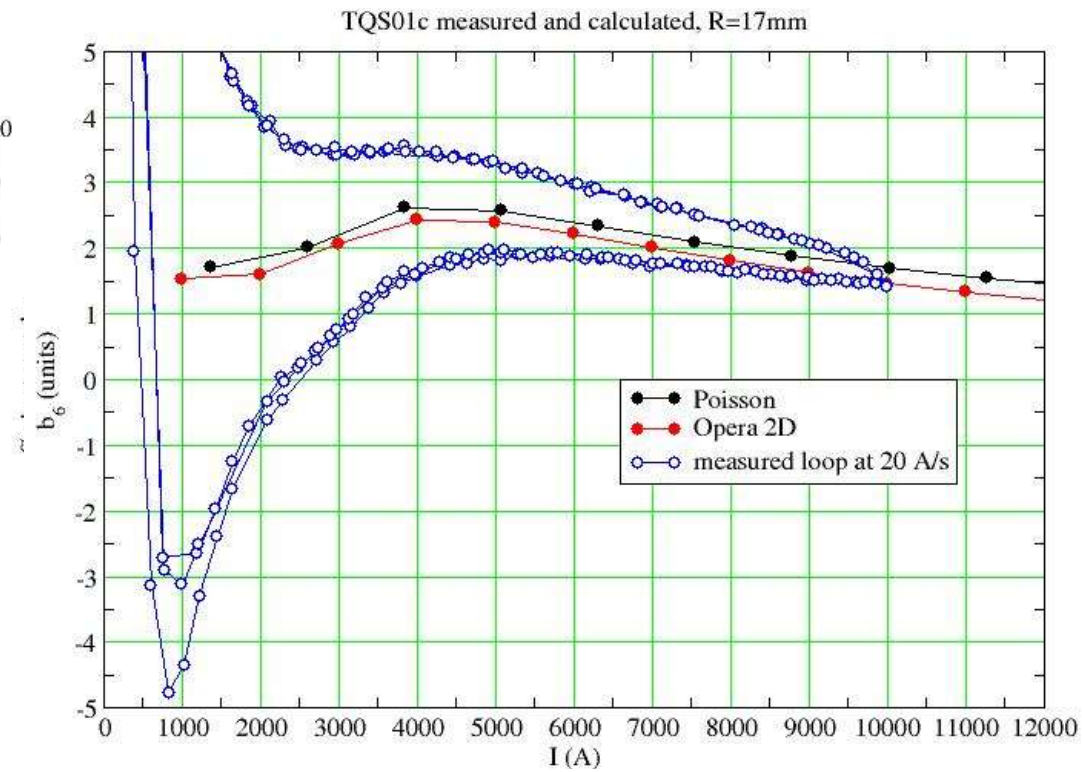

Quench performance R&D

- eg titanium pole pieces
- conductor development

Initial field quality data

- modeling confirmation
- new magnetization regime?

TQC02 assembly (April 07)

TQC02 collared coil assembly has been completed, with an as-built shimming algorithm to apply 20 Gpa of pressure

Collar deflection & strain gauge data indicate that preload is consistent with predictions.

A short section of mid-plane shim is out of place between two coils after collaring.

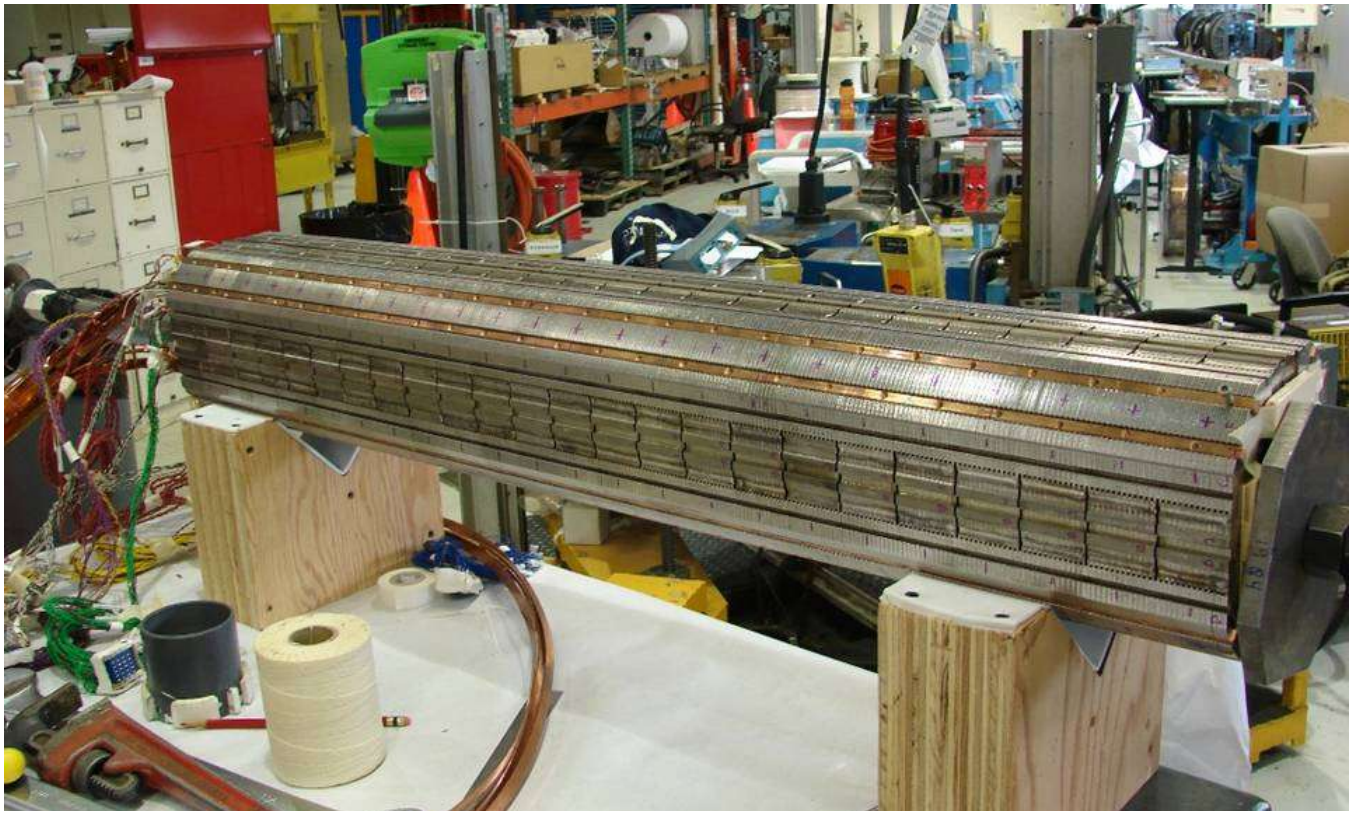

Coils are being de-collared and assessed for damage.

If they are undamaged, TQC02 will be re-collared and completed.

Phase 1 & 2 upgrades

5 year plan: themes & uncertainties

The DG has 3 themes in requesting "white paper" R&D funds

1) optimize LHC operations at design energy
2) renovate injector complex to ensure reliability
3) high luminosity upgrade of accelerator & detectors

2007	CERN Council decision on R&D funding to CERN
2008+	CD-0 "statement of need" launches IRUP project
2009	LARP demonstration of Nb_3Sn technology
2012	Install phase 1 upgrade with 130 mm NbTi quads?
2015+	Install phase 2 "full upgrade" of detectors & accelerator

IRUP = phase 2 full upgrade

GOALS OF A PHASE- ONE UPGRADE

– We will explore the region between 100 and 150 mm, at the limit of Nb- Ti

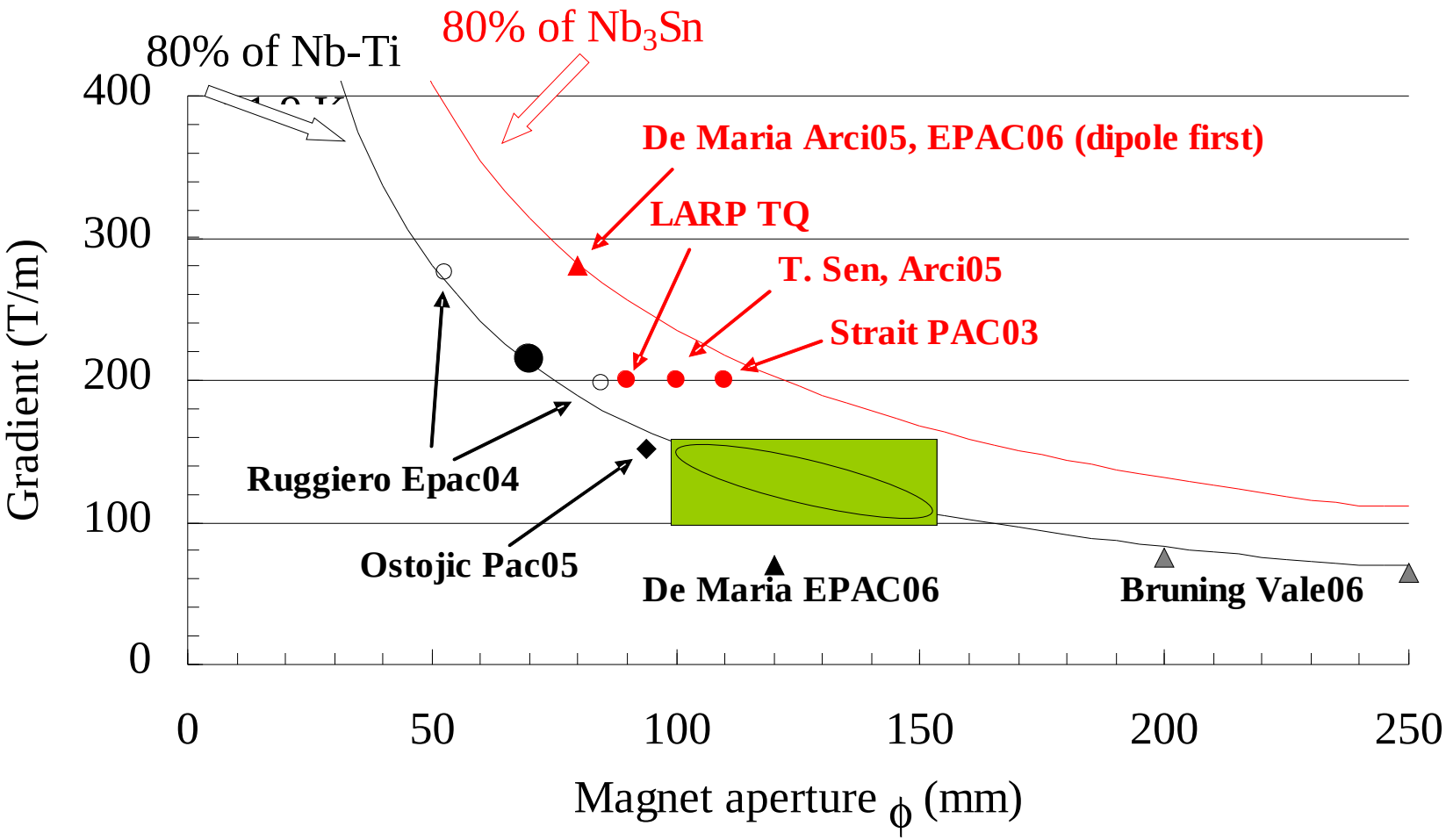

"Parametric studies for a phase-one LHC upgrade based on NbTi" (April 07), Koutchouk, Rossi & Todesco.

Flexibility

[F. Zimmermann, HB2006]

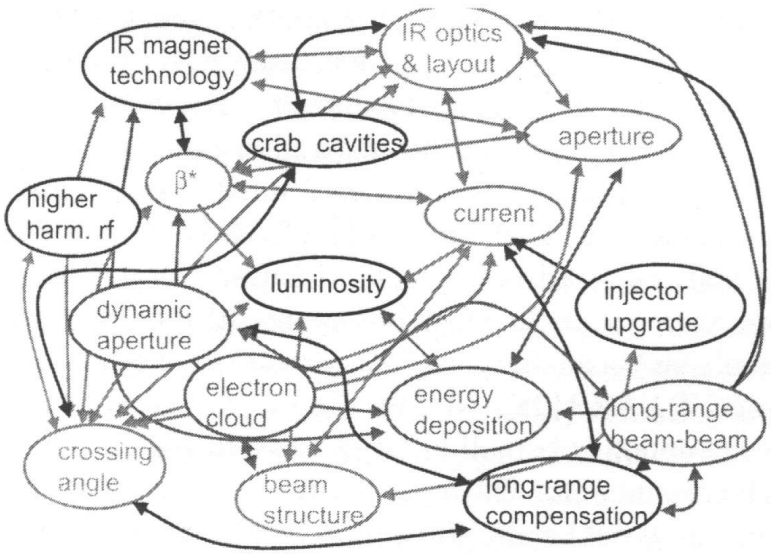

Figure 2: Upgrade roadmap for the LHC IR showing complex interdependence.

The CERN discussion recognizes, supports and protects LARP Maget R&D activity on Nb_3Sn magnets:

- Nb_3Sn r&d should be pursued with all efforts
  - The proof of a long prototype is fundamental
  - If we had available Nb_3Sn magnets today, we would use them

It also points to other R&D:

  - Crab cavities or D0 to reduce effect of crossing angle
  - … all other possibilities analysed up to now in CARE-HHH and LARP

Reality – beam – will teach the true complexities (see cartoon).

LARP maintains a flexible R&D plan for all scenarios

Project & Program

IRUP would be a construction project
- Nb_3Sn triplet magnets, slim magnets, ...
- (Possibly) electron lenses, crab cavities, ...

An IRUP CD-0 will be synchronized with U.S. CMS & ATLAS
- IRUP is the "full upgrade", by definition
- CERN needs time to resolve phase 1 plan, declare "need"

LARP is a goal oriented R&D program, currently aimed at:
- LHC commissioning
- Preparation for an IR Upgrade Project IRUP
- 5 year plan?

IR Upgrade PROJECT

Preliminary scope & cost of an IR Upgrade

Assuming a 5 year project with a flat funding profile

Item	Total Cost $M	Technical Risk	Lumi Gain	LARP R&D
MAGNETS	**100**			
IR triplet Nb3Sn quads	90	Low	High	Ongoing
Slim magnets in detectors	10	Low	Moderate	FY08+
Magnetized TAS absorbers	-	Moderate	Moderate	
BEAM-BEAM COMPENSATORS	**4**			
Electron lenses for head-on	3	High	High	FY08+
Wires for long range	1	Low	Moderate	Ongoing
Small angle crab cavities	-	High	Moderate	Prelim.

Notes:

- Triplet quads: “low risk” assumes LARP R&D success in 2009.
- Slim magnets: ongoing discussion of scenarios at CERN.
- Electron lenses: R&D with beam at Tev & RHIC to lower risk.
- Crab cavities: back up plan for worst case beam-beam scenario.

“Slim” magnets in ATLAS

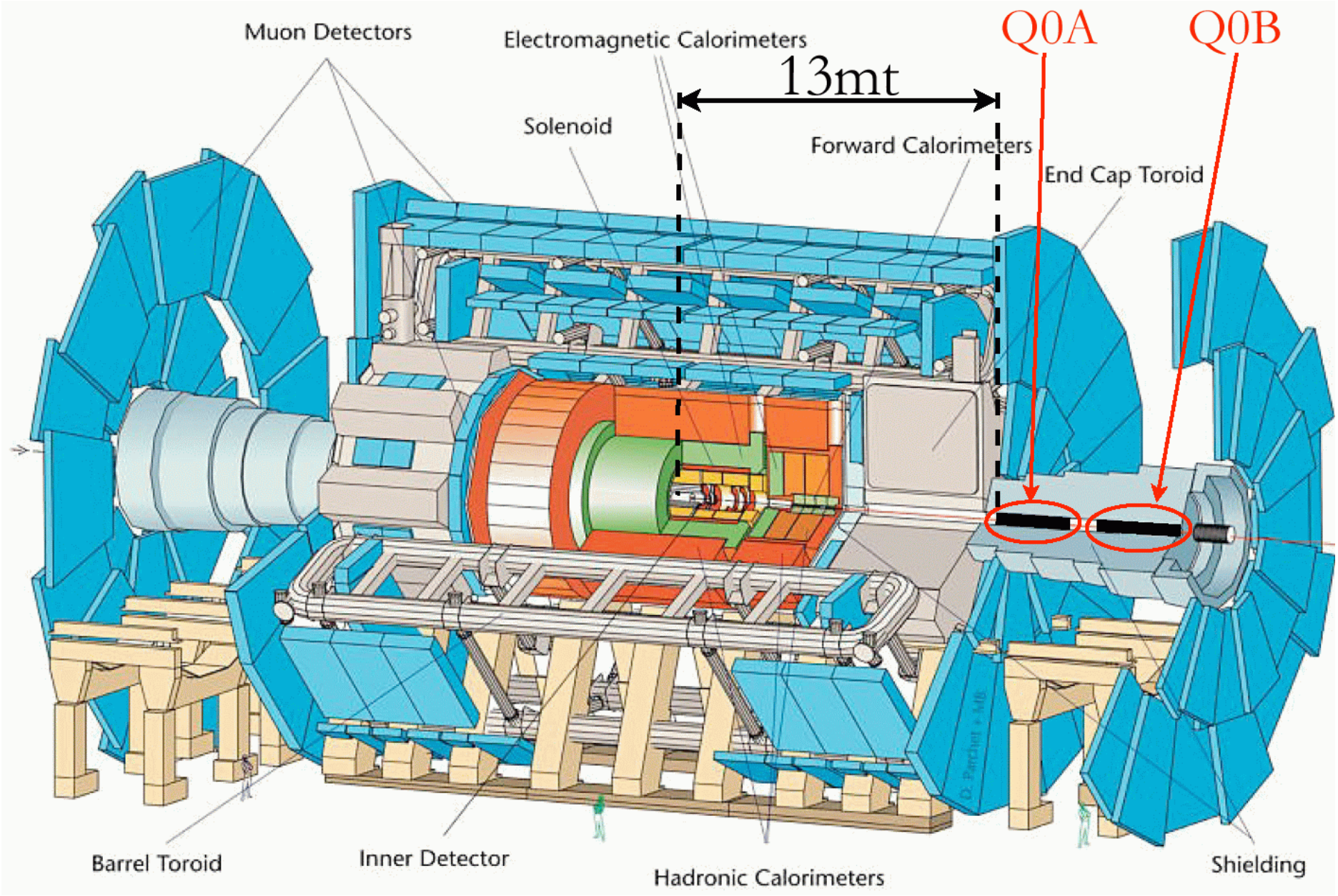

“Slim” magnets, electron lenses, crab cavities

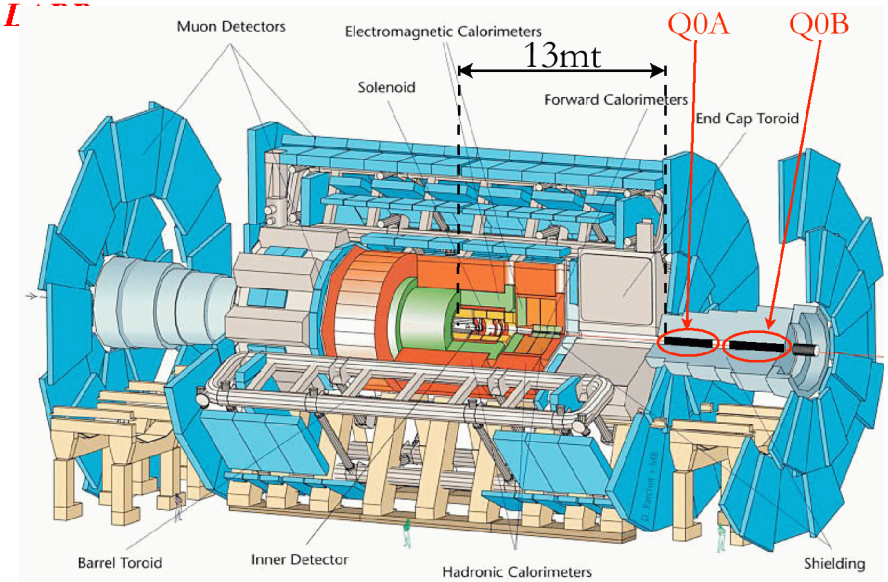

Slim magnets (left)

Fit dipoles/quads within detectors

Nb_3Sn, direct wind, (HTS)?

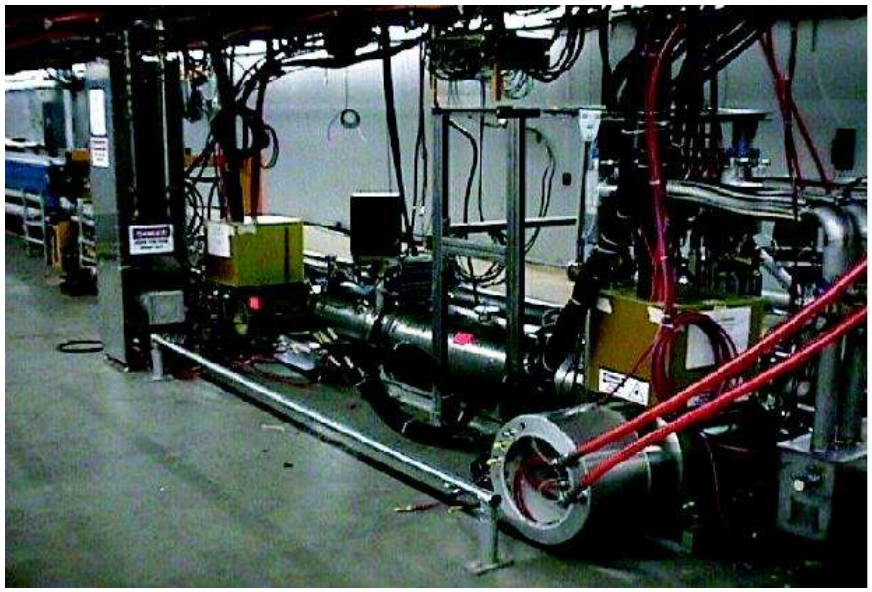

Electron lens (right)

Compress head-on tune footprint

Needs further validation with beam

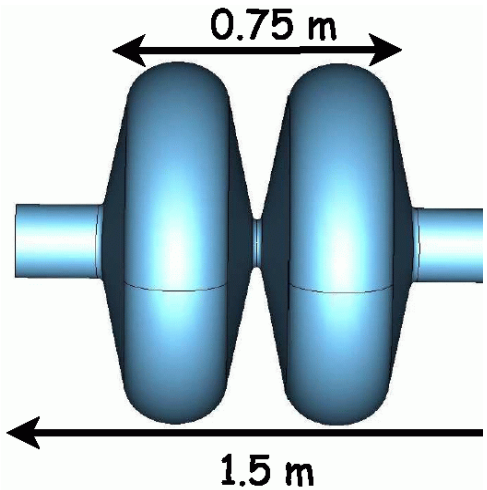

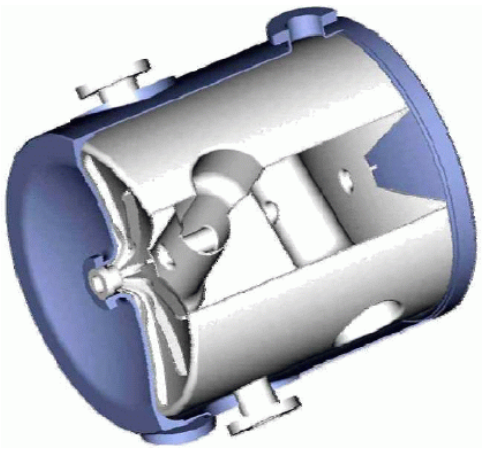

Crab cavities (left)

Escape compromise between lumi loss & long range beam-beam

Conventional or exotic solution?

Magnet diversification

LARP mission: Explore R&D to
1) exploit, develop & retain U.S. capabilities,
2) increase LHC luminosity

1) SLIM MAGNETS – Q0 (& D0)

- systematic study MUST happen "now", across boundaries
- ATLAS & CMS attend bi-weekly meetings at CERN

2) CONDUCTOR DEVELOPMENT

- Expanded (but modest) involvement: pushed Nb_3Sn and HTS
- Using the standard LARP process for potential new task

3) FAST CYCLING MAGNETS

- The new 50 GeV PS2 might be superconducting?
- If needed a super-SPS would be superconducting?
- Note new CERN working groups & CARE workshop ....

Live issues

Extrapolated R&D goal: Expand the engineering phase space available for Nb_3Sn quads 2009+

(Strawman) Implementation R&D goal: Construct 1 or 2 Nb_3Sn quads to "swap out" phase 1 (130 mm) NbTi quads 2012+

What is the magnet sequence trajectory:
- TQ, LQ, HQ, HQ130, AQ, AAQ, ...
- goals of each type? Trajectory to Accelerator Quality?

Diversified optics & magnets
- slim magnets: eliminate some layouts and/or technologies?
- fast cycling: situation unclear until October CARE meeting?

Contributions in kind

Outside LARP & before IRUP (2015+), eg:

- Rotatable collimators?
- Controls software (LAFS)
- Beam-Beam compensation wires (inexpensive)
- Electron lenses???
- 130 mm quadrupole swaps, from NbTi to $NbSn_3$??

These deserve thought (in proportion to # of question marks ??)

But note the broad scope & importance of injector plans ...

Summary

LARP & CARE roadmap

April	18-20	**Collaboration Meeting 8, FNAL**
May	??	**Executive Committee meeting ??**
	31 ??	**Accelerator Systems Dry Run ??**
June	1 ??	**Magnet R&D Dry Run ??**
	5-6	**Semi-annual review, FNAL**
July	2-4	**Beam-Beam mini-workshop, SLAC**
Oct.	1-5	**CARE-HHH-APD Beam07, CERN**
	17-19	**CARE Annual meeting, CERN**
	??	**LARP Collaboration Meeting 9, SLAC??**
Nov.	7-9	**CARE-HHH-APD LUMI07, Frascati**

Present & defend the LARP 5-year plan!

2007 CERN Council decision on R&D funding to CERN

2008+ CD-0 "statement of need" launches IRUP project

2009 LARP demonstration of Nb_3Sn technology

2012 Install phase 1 upgrade with 130 mm NbTi quads?

2015+ Install phase 2 "full upgrade" of detectors & accelerator

Summary - LARP

1) LARP is off to a great start. In position to be a state-of-the-art leader in global LHC accelerator physics and engineering.

2) DG's strategy includes injector renovation & 2 lumi upgrades, first with NbTi quads, later with Nb_3Sn quads + detectors

3) LARP magnet strategy on Nb_3Sn for "full upgrade" is adaptable to considerable uncertainties of schedule etc.

4) Magnet R&D goals:

Pre-eminent: demonstrate Nb_3Sn viability by 2009

Continuing: identify/expand engineering phase space 2009+

Diversified: fast cycling magnets & slim magnets. 2009+

(Strawman): slot compatible Nb_3Sn quad 2012+

5) Reinvent "Instrumentation + Commissioning" in the new era.

Summary - IRUP

1) The estimated total IRUP cost of $104M over a flat 5 year profile is crude!

2) CD-0 synchronized with U.S.-CMS & U.S. ATLAS

3) Multiple scenarios are being discussed. Final resolution and planning need experience with beam.

4) IRUP (a contruction project) and LARP (an R&D Program) would proceed in parallel.

5) Council approval for R&D funding at CERN is crucial for both CERN and LARP. Appears near ...

Summary - connections

1) Contributions in kind outside LARP & IRUP

2) FNAL base magnet program is vital for LARP. TD re-scoping?

3) TD mirror dipole program integration with LARP?

4) NSF-APPI, CERN/EU and bi-lateral efforts

5) Junior workforce pipeline and connections to universities

6) Stewardship
   - in HEP AARD for NP & BES activities?
   - in RHIC, soon, for beam testing & validation