Liquid Argon and the Future Neutrino Program

R. Rameika

Project X Workshop

January 24-25, 2008

Why Liquid Argon?

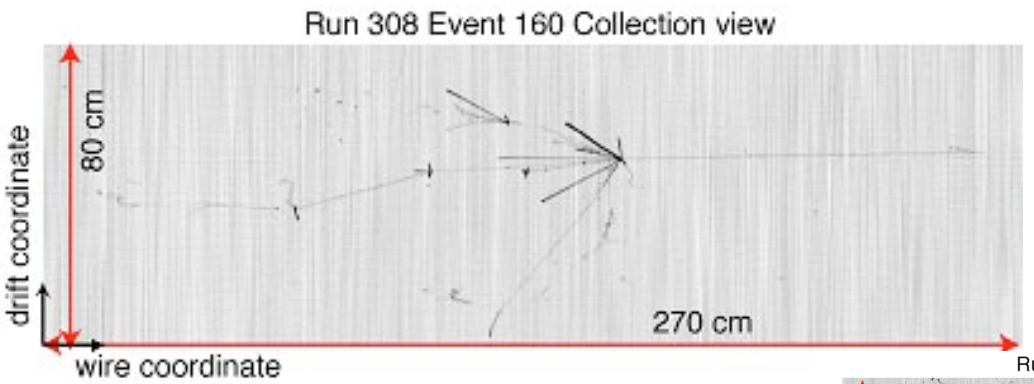

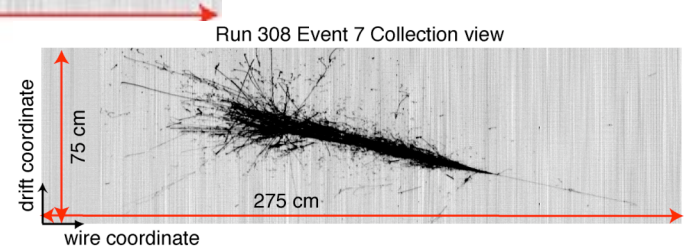

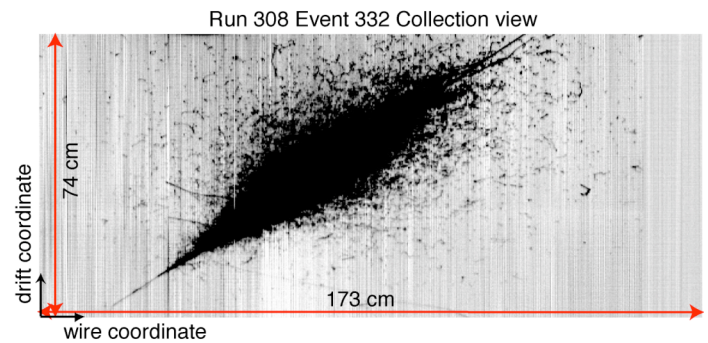

Excellent spatial and energy resolution, $e/\pi^0/\gamma$ separation

Protons + Baseline + Mass = Physics Potential

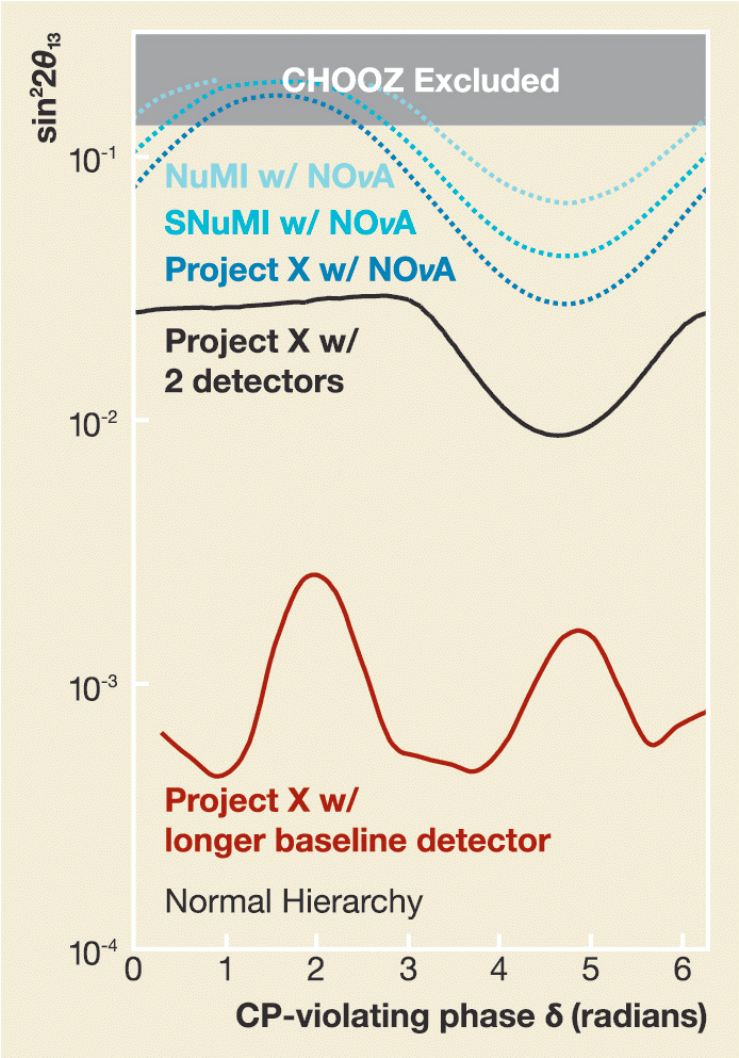

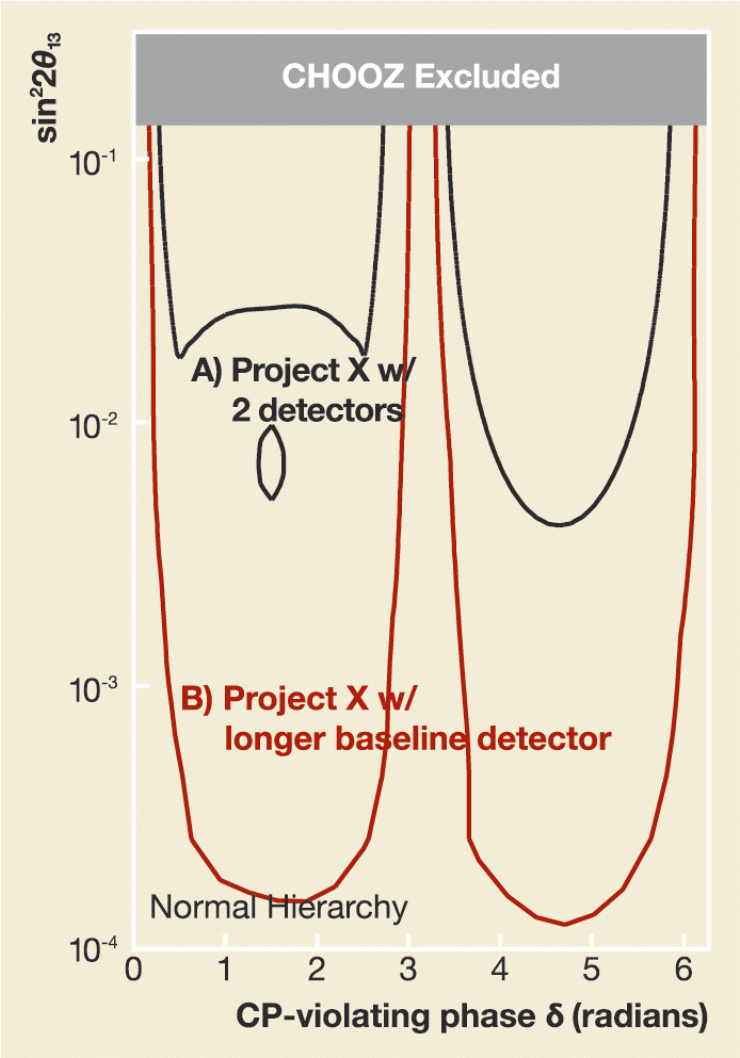

Physics demands…

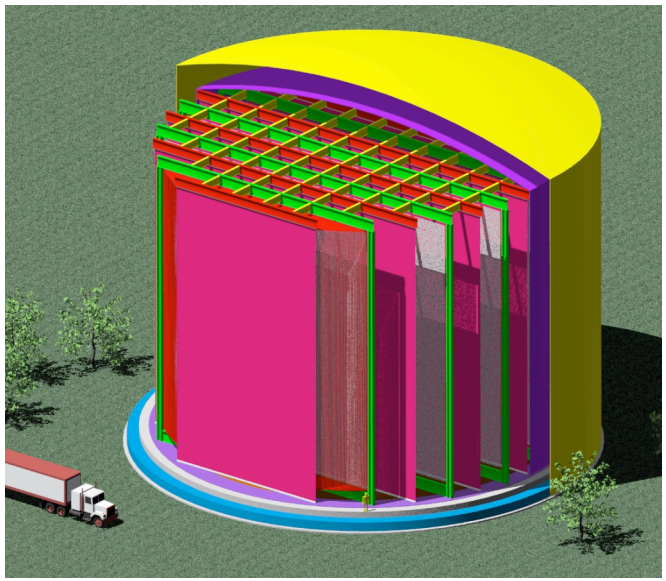

FLARE

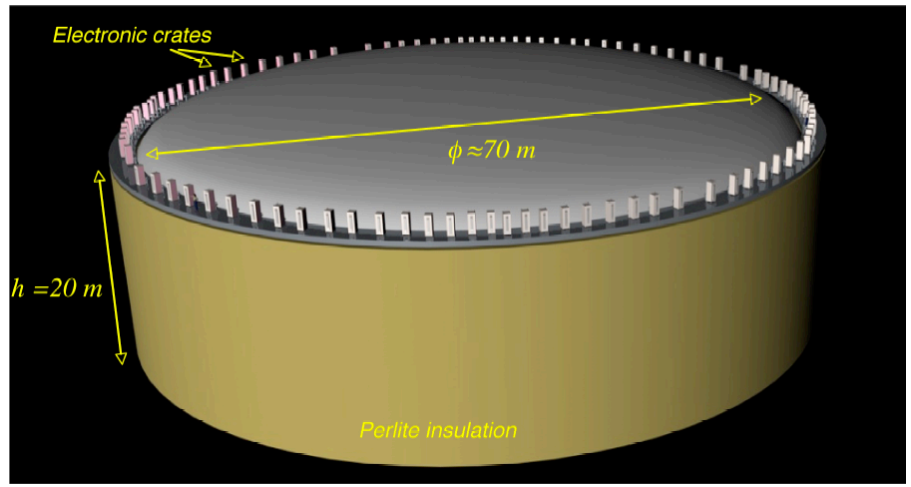

Glacier

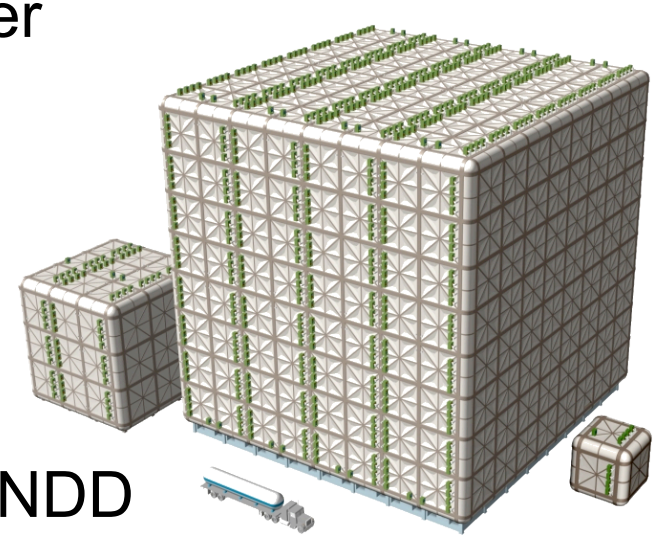

LANNDD

50 - 100kT concepts

How do we get there?

Long R&D history with ICARUS

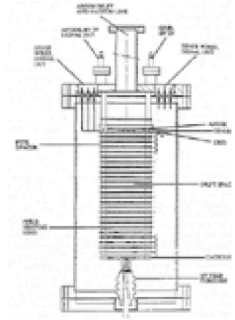

24 cm drift wires chamber

1987: First LAr TPC. Proof of principle. Measurements of TPC performances.

3 ton prototype

1991-1995: First demonstration of the LAr TPC on large masses. Measurement of the TPC performances. TMG doping.

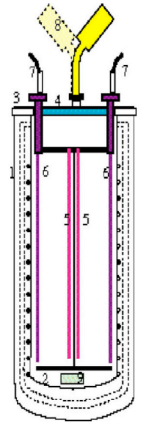

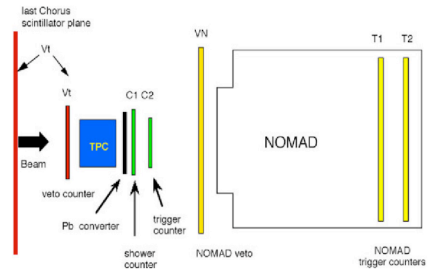

50 litres prototype
1.4 m drift chamber

1997-1999: Neutrino beam events measurements. Readout electronics optimization. MLPB development and study. 1.4 m drift test.

10 m^3 industrial prototype

1999-2000: Test of final industrial solutions for the wire chamber mechanics and readout electronics.

The success of the
ICARUS T600

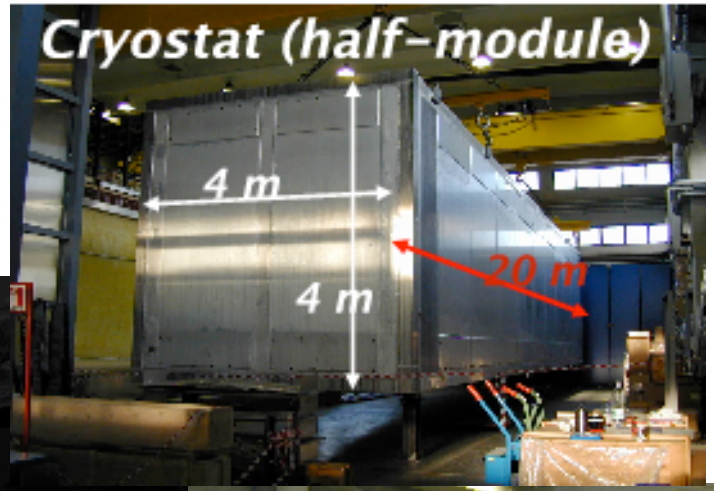

tested above
ground in Pavia
in 2001
now below
ground in
Gran Sasso

Liquid Argon TPC Overview for NuSAG

Note: At this point in time …

"15" could be "50"

"1" could be "3"

etc

The optimum choices depend on the goals.

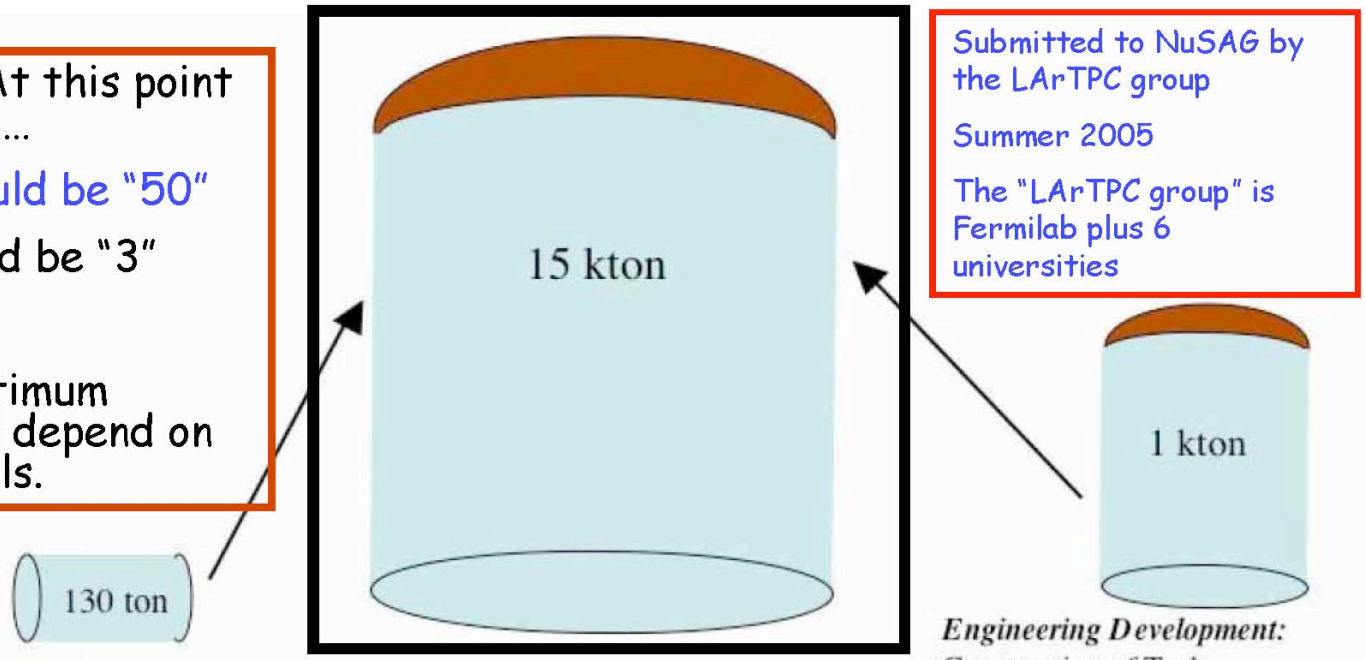

Submitted to NuSAG by the LArTPC group

Summer 2005

The "LArTPC group" is Fermilab plus 6 universities

Physics Development *using* ***existing*** *technology*
Record **complete neutrino interactions**: (ν_e & ν_μ)
Establish **Physics Collaboration**
Develop **Event Identification**,
Develop **Reconstruction**,
Develop **Analysis**,
Establish successful **Technology transfer**

Engineering Development:
Construction of Tank
Argon Purity
Mechanical Integrity of TPC
Readout S/N
Microphonics due to Argon Flow

Technical Setups

Purity Monitor Development	Materials Tests	5 m Drift Demonstration	Long Wires Tests	Electronics Development

Recommendations

NuSAG 07

Recommendation 4. A phased R&D program with milestones …
[a] 50-100 kton detector is recommended for the liquid detector option.
Upon completion of the existing R&D project to achieve purity sufficient for long drift times, to design low noise electronics, and to qualify materials, construction of a test module that could be exposed to a neutrino beam is recommended.

Liquid Argon-Project X Planning Meeting 1/14/08

Develop an Experimental Strategy for LArTPCs :

a) Identify critical open questions for LArTPCs for PX/DUSEL scale detectors

b) Identify how to best address these? studies/test stands/prototypes/experiments?

c) Develop a LArTPC Strategy plan based on a) and b) and existing worldwide efforts on LarTPCs.

- Studies/Test stand and prototypes/experiments leading up to PX/DUSEL scale detectors
- Timeline for this program

Writeup in ~1 page of strategy for "Golden Book" + longer supporting documentation as needed....

R&D issues

- Electronics
- Light detection
- Purity
- Simulation/Reconstruction (Physics Development)
- TPC design
- Vessel Design
- Vessel location

List is alphabetical, can we prioritize?

All important, hard to prioritize....

Address via:

- Studies
- Test stands
- Prototypes
- Experiments

Evolution of a Liquid Argon Physics Program

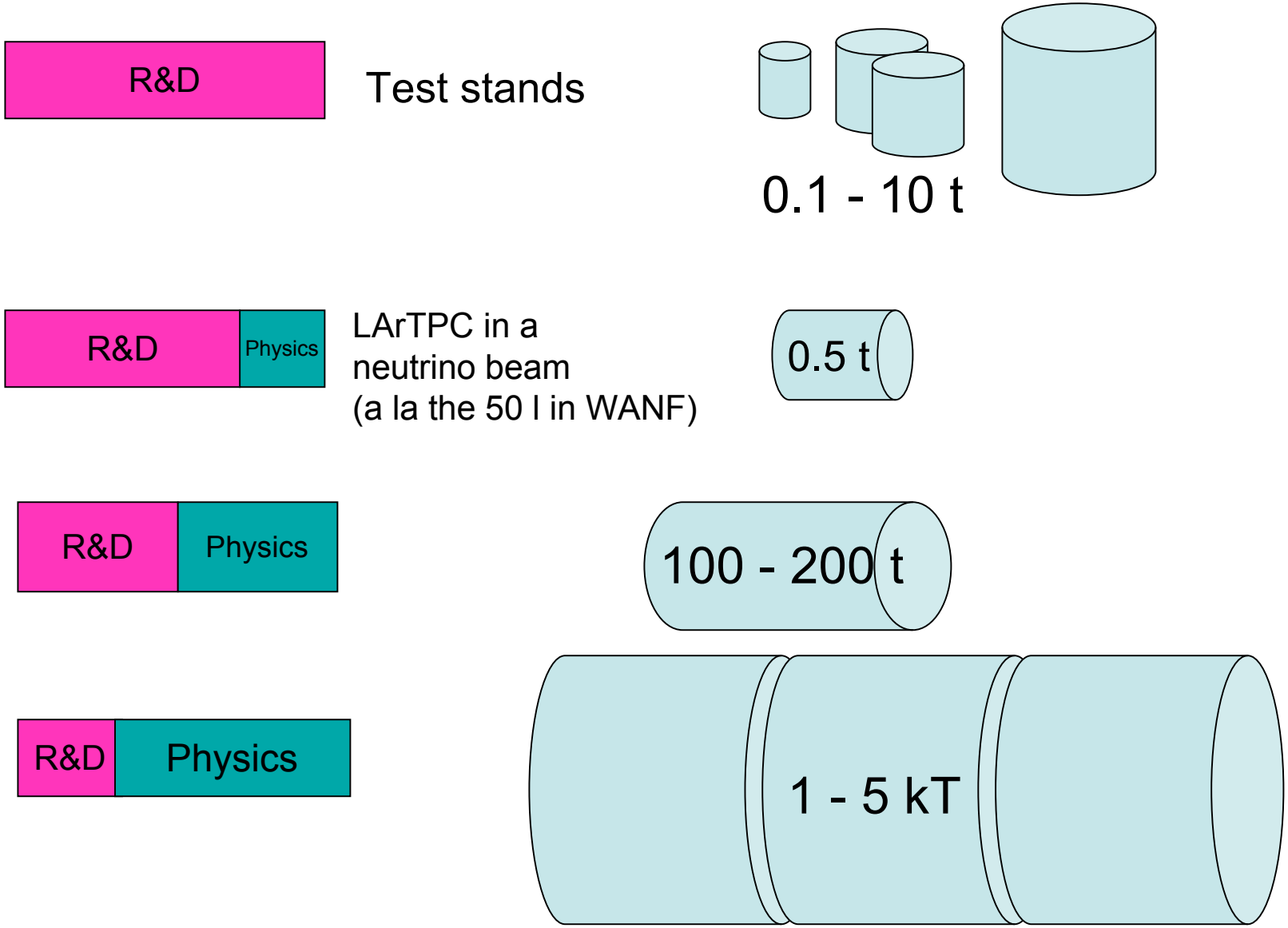

Physics with 100 kT

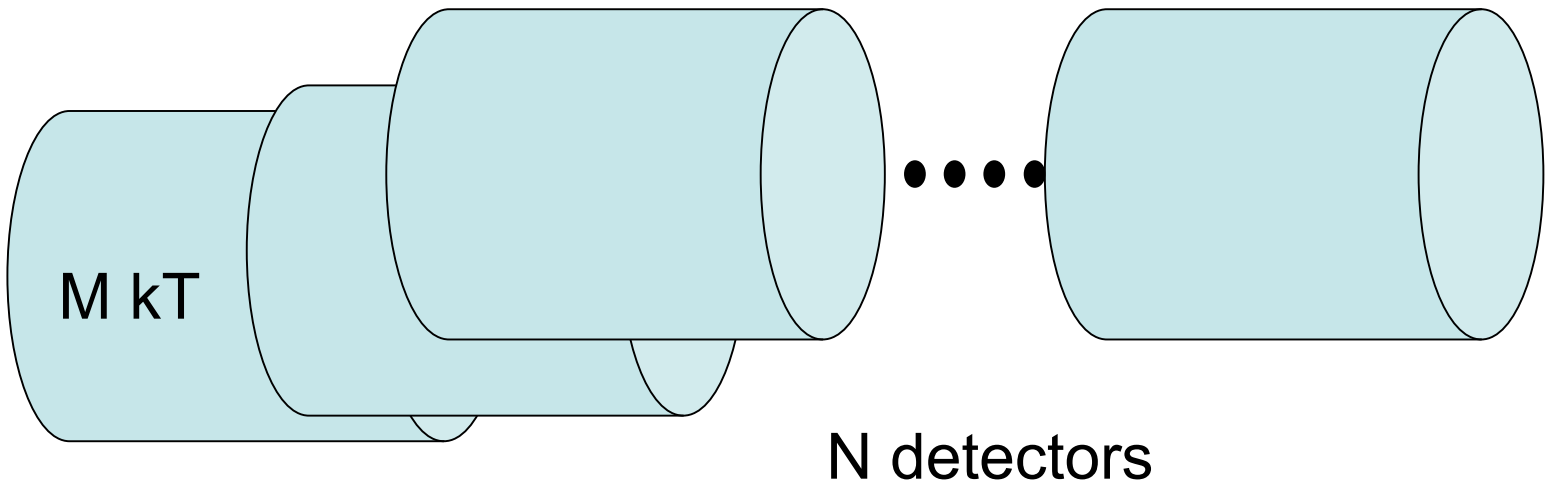

M x N = 100

$100 > M > 5$

$1 < N < 20$

We need to optimize M & N against cost, schedule, and technical feasibility

R&D

Test Stands

50 l TPC at Yale

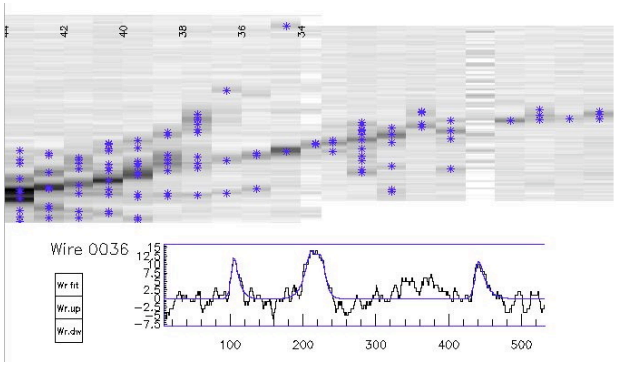

Purity Monitor-
MaterialsTest Stand

Electronics Test Stand

Fermilab

20 ton purity
demonstration

$300k yet to be funded

R&D | Physics

ArgoNeuT (Spring 2008)

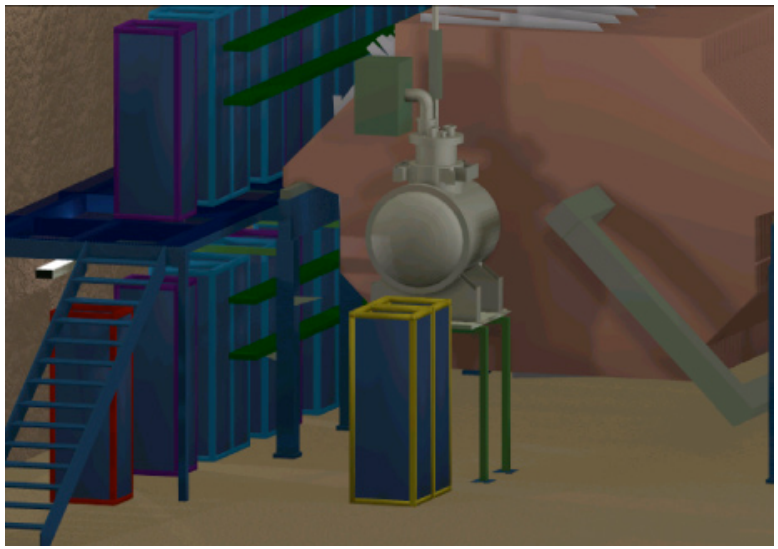

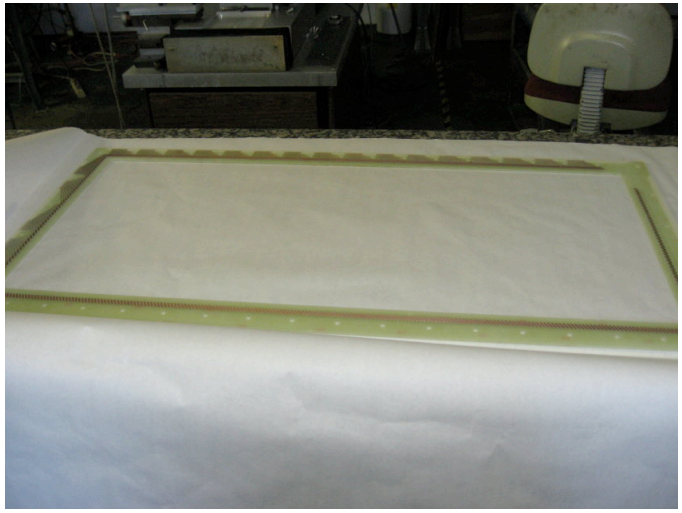

500 l total volume
0.3 ton active mass
0.5x0.5x1.0 m^3 TPC

~150 interactions/day

R&D | Physics

microBooNE - proposal

Develop cold electronics
Optimize cryostat/insulation designs
Perfect TPC construction …

Identify nature of the miniBooNE low E excess
Measure neutrino cross sections from Booster
And NuMI neutrinos…

170 ton

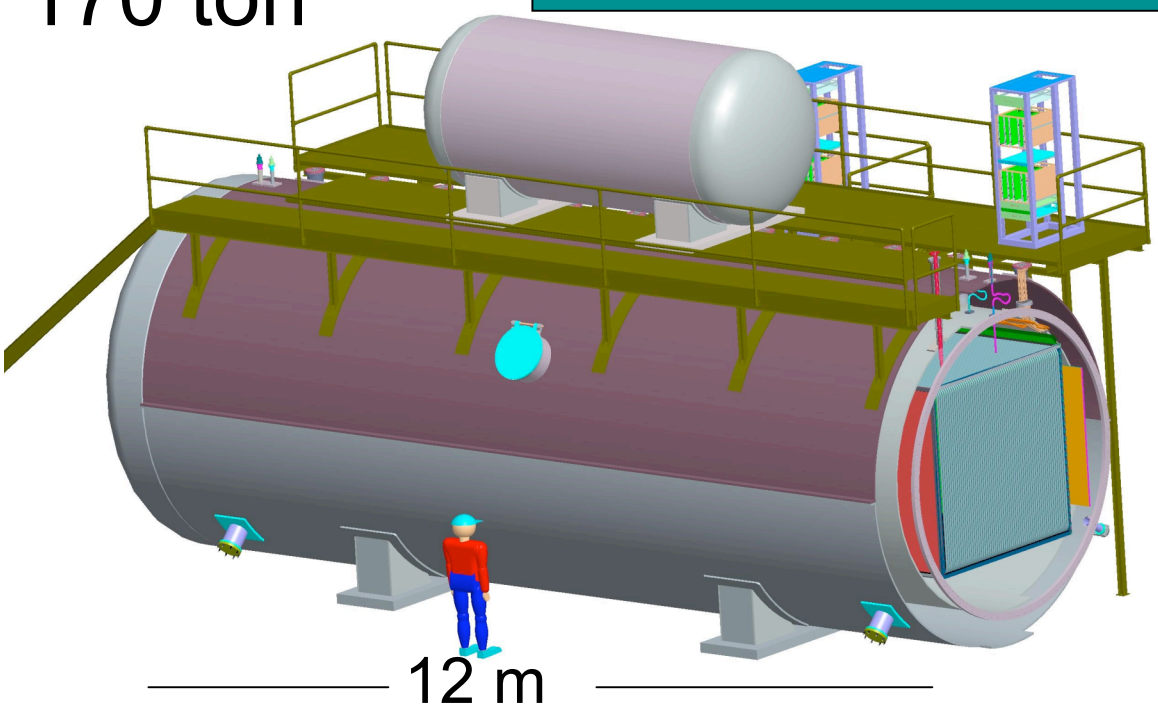

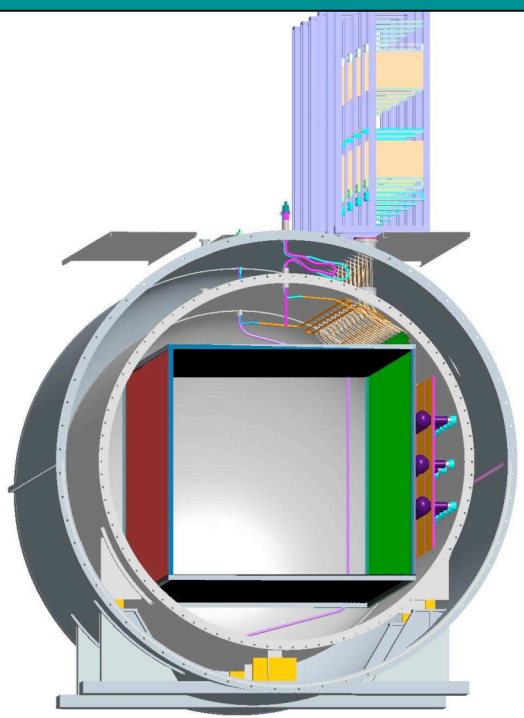

R&D | Physics

LAr5 at SOUDAN - new idea

Niki's talk

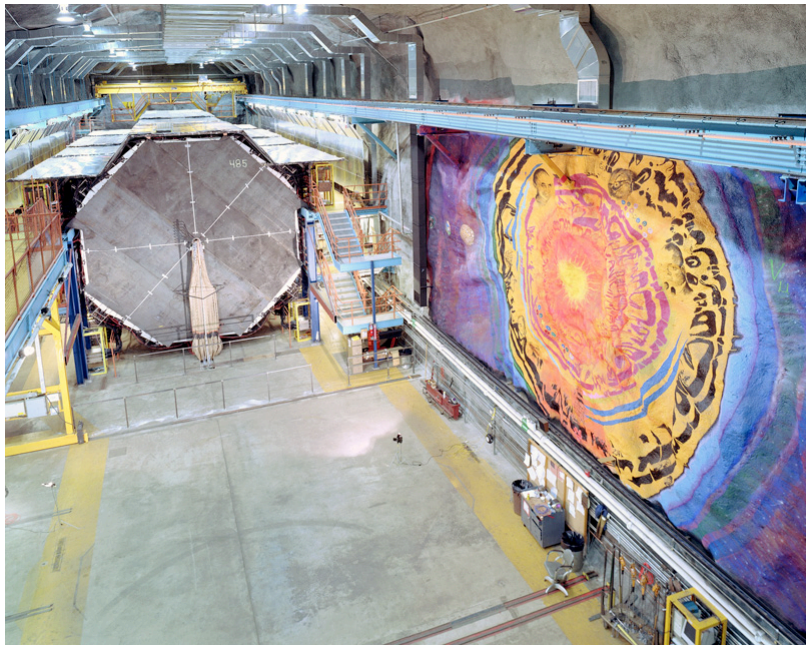

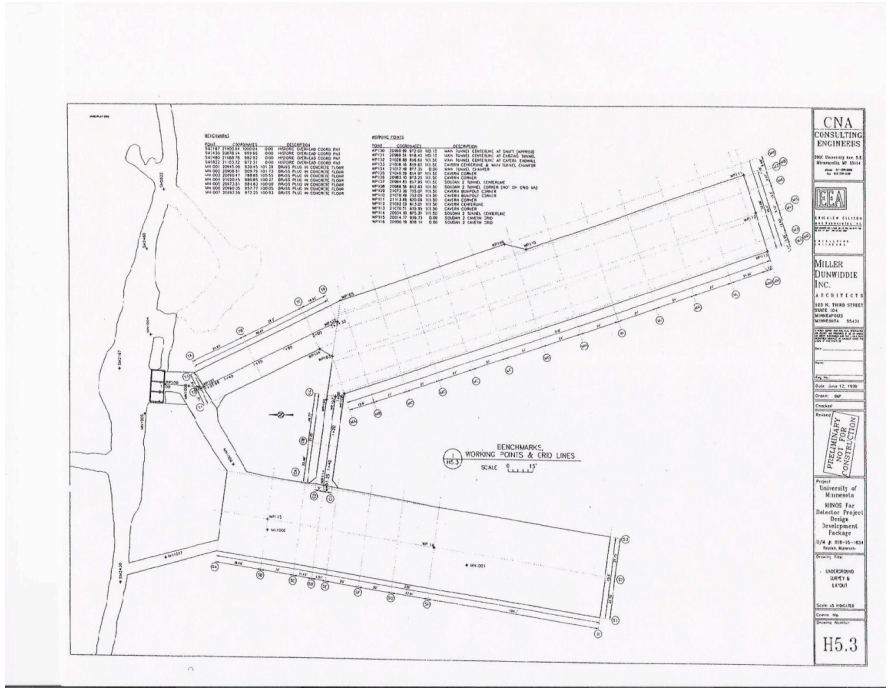

~2011 we have a completed experiment, an empty <u>underground</u> cavern, in the world's best neutrino beam..

This is the perfect scale for defining M & N
And doing physics at the same time

Evolution of the Liquid Argon Physics Program

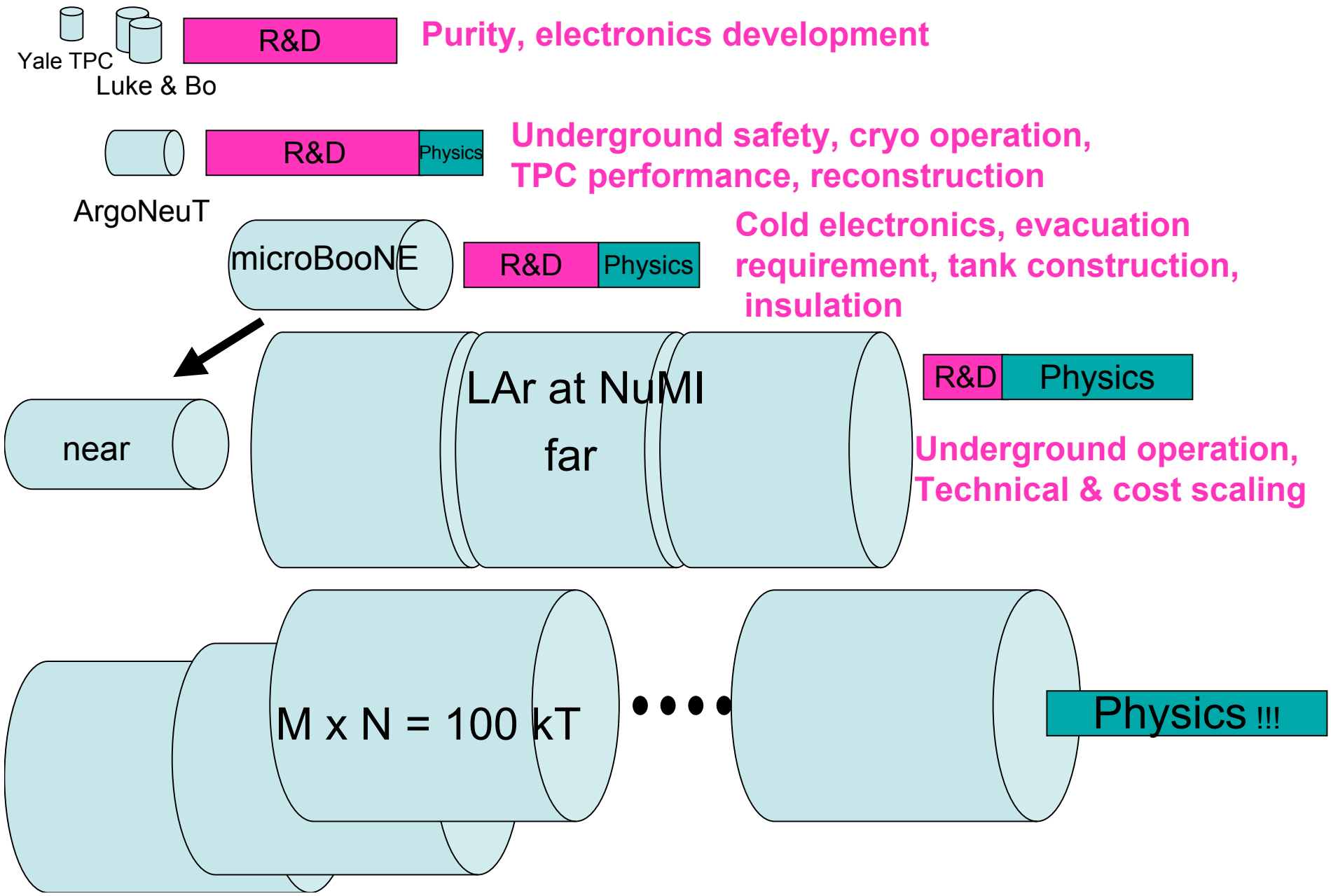

Evolution of the Liquid Argon Physics Program

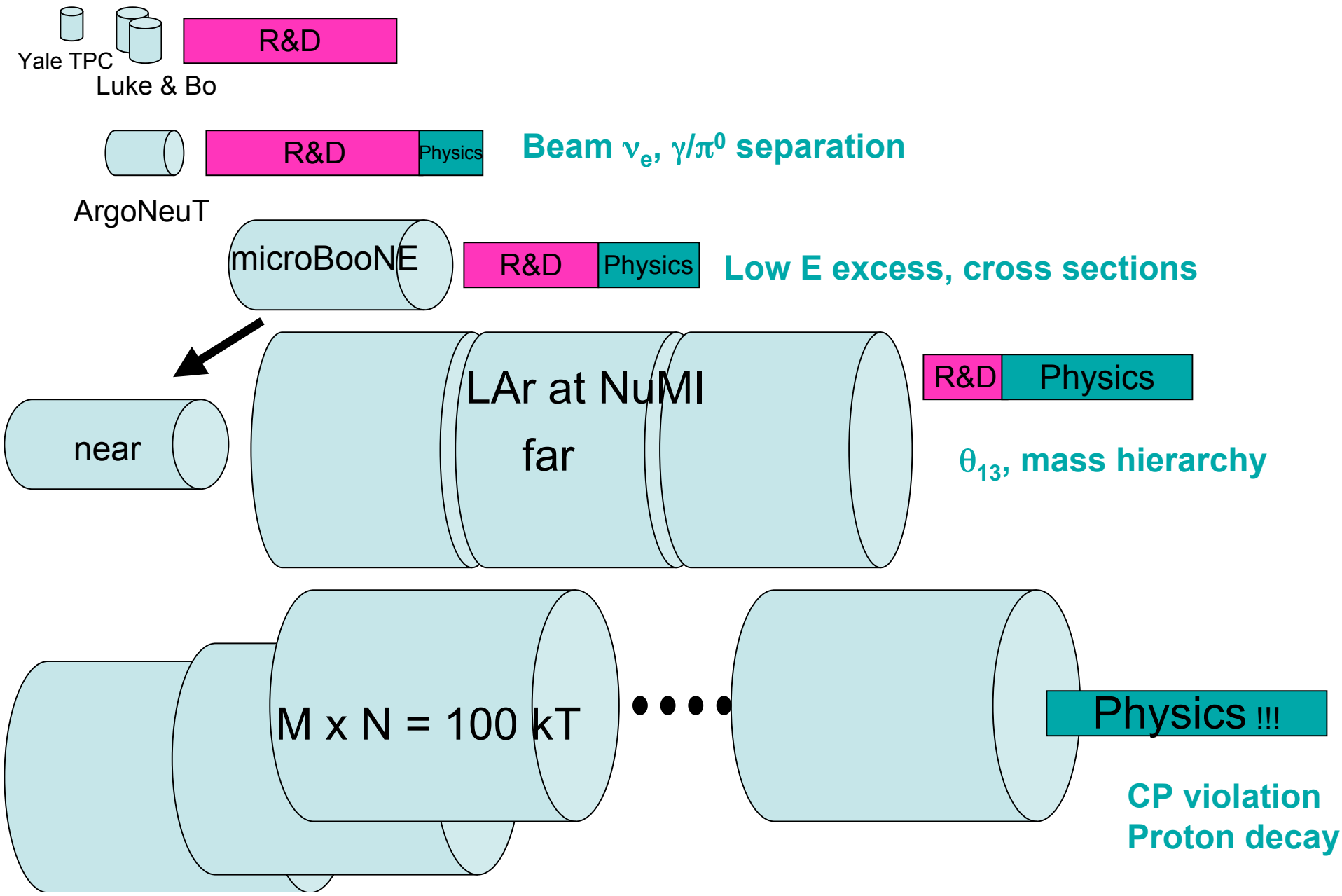

Evolution of the Liquid Argon Physics Program

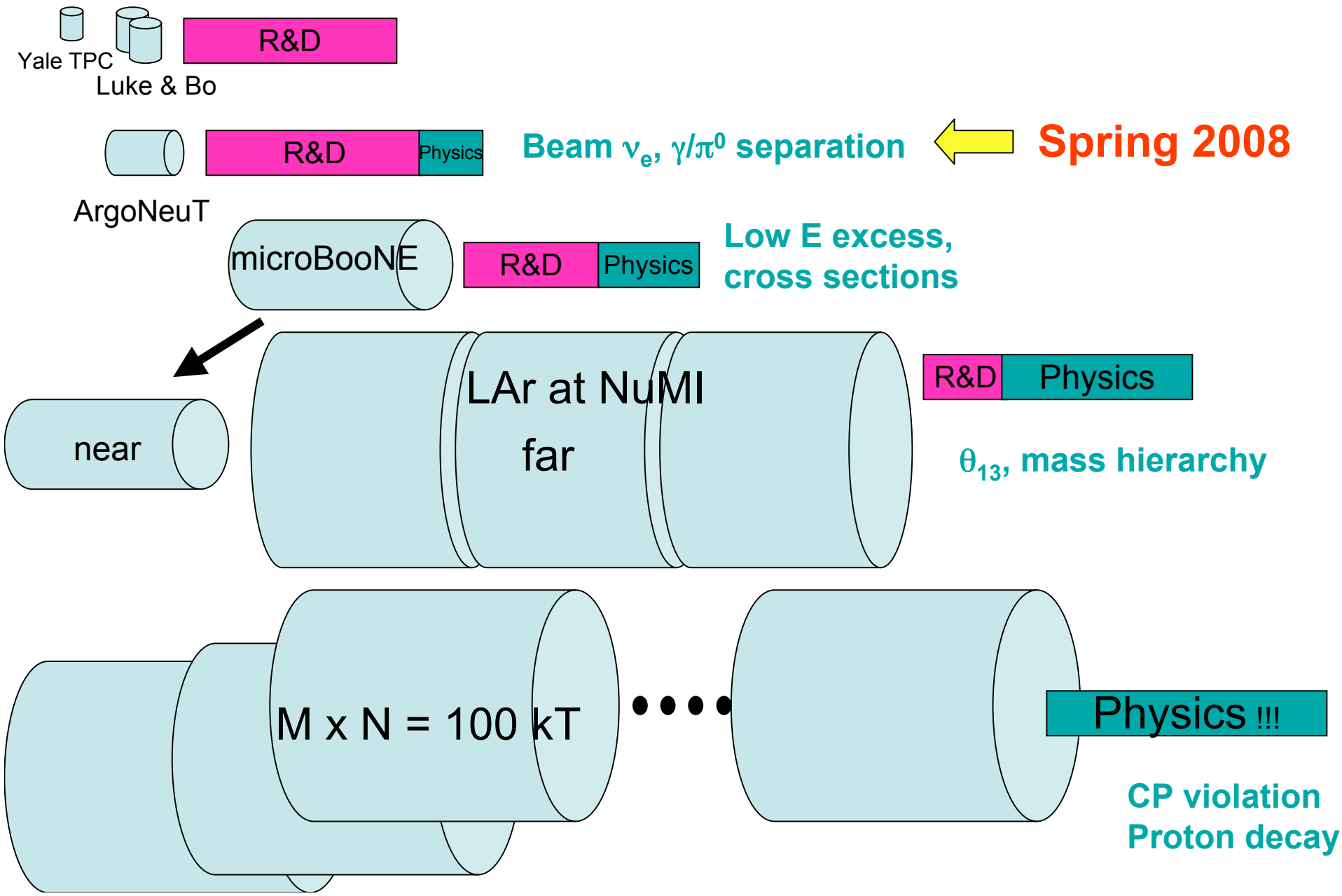

Evolution of the Liquid Argon Physics Program

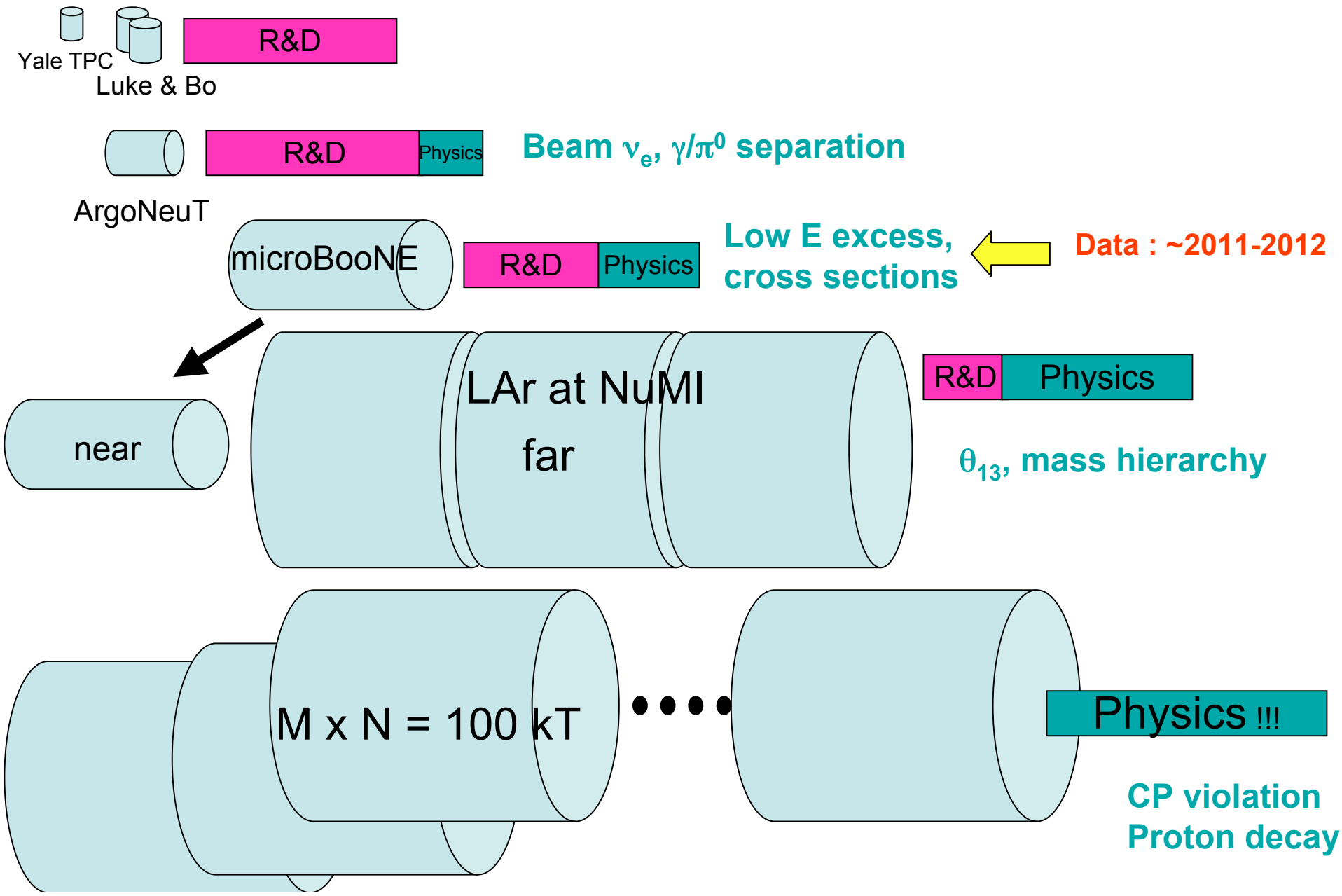

Evolution of the Liquid Argon Physics Program

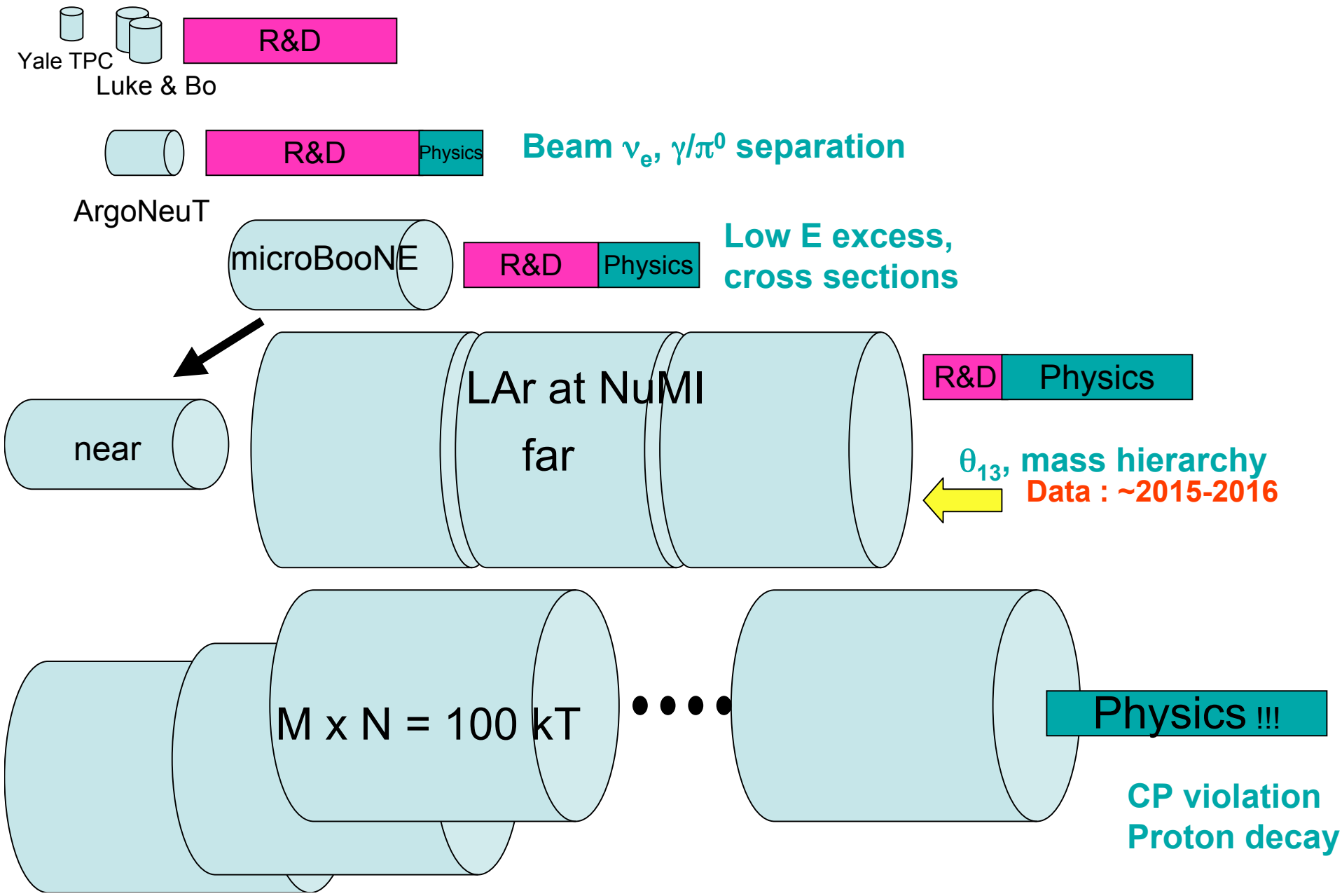
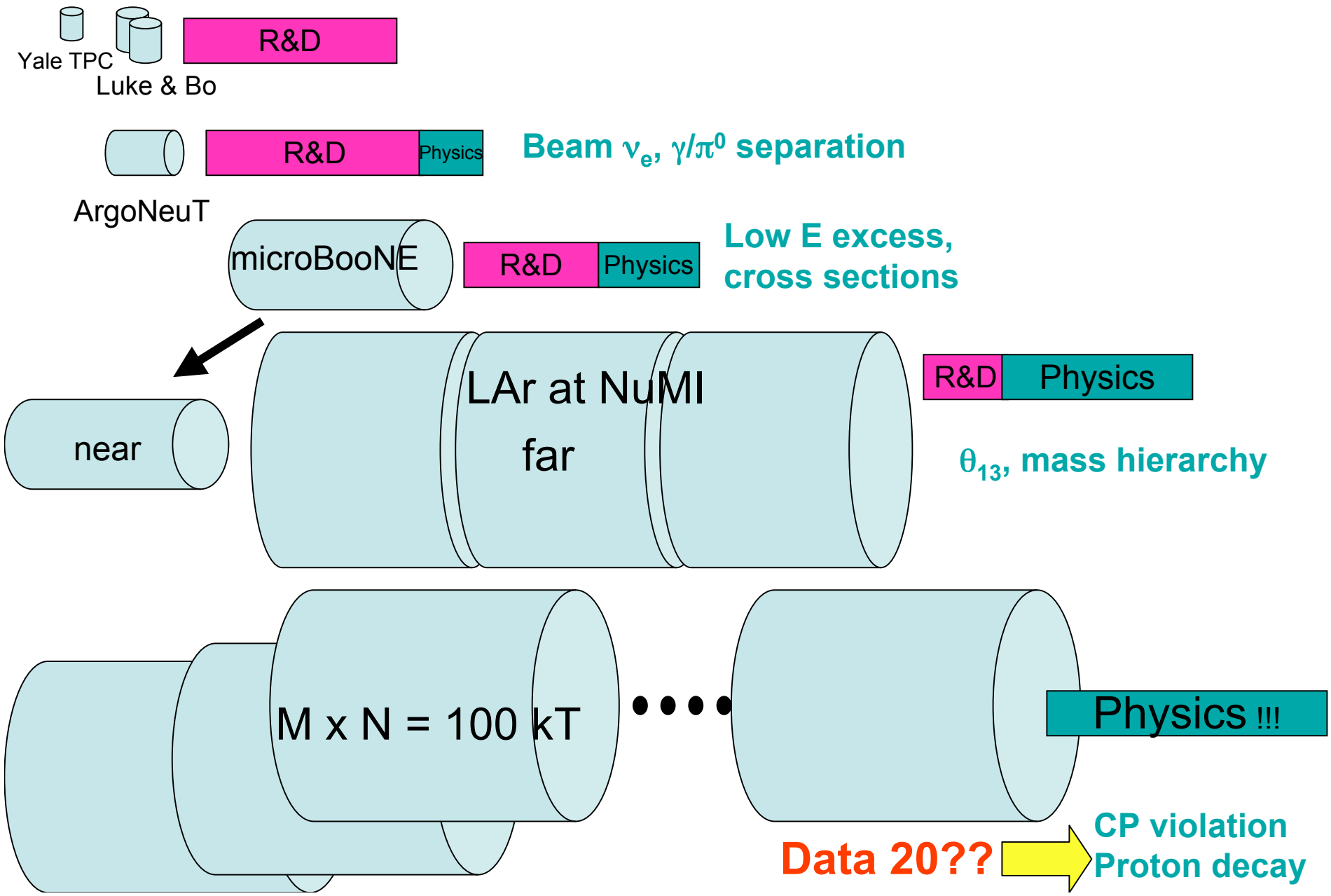
Evolution of the Liquid Argon Physics Program