Fermilab

Master Planning Task Force

July 17, 2012

*Members (**P**= Present, **A**=Absent)*

A	Pier Oddone	**A**	Bruce Chrisman	**A**	Steve Holmes	**P**	Greg Bock
A	Vicky White	**A**	Bob Kephart	**A**	Giorgio Apollinari	**P**	Mike Lindgren
A	Roger Dixon	**A**	Steve Wiesenthal	**P**	Randy Ortgiesen	**P**	Young-Kee Kim
A	Patricia McBride	**P**	Paul Czarapata	**P**	Stuart Henderson	**A**	Katie Yurkewicz
P	Jack Anderson	**P**	Carl Strawbridge (phone)	**P**	Steve Dixon		

Guests

E. Gottschalk, J. Bakken, R. Sood, A. Harris

A. Presentation

R. Ortgiesen (RO) provided an overview of the following:

- The status of the Central Utility Building (CUB) reliability;
- The Science Laboratory Infrastructure (SLI) projects;
- The FY13 PEMP Notable Outcome for Master Planning;
- A review of the Master Planning Task Force Charter;
- The designation of a Laboratory Architect.

The presentation is attached and the following specific items were discussed:

CUB

1. It was noted that the CUB contains a tremendous amount of mechanical equipment that supports both programmatic and support functions at the Laboratory. While a great deal of work has been accomplished, there remain vulnerabilities due to aging equipment that could impact future operations.
2. Given the state of CUB, the question was raised as to why this work was not included as an SLI project. RO responded that the currently scheduled SLI project includes high voltage electrical and industrial cooling water infrastructure that is more urgent.

SLI

1. It was noted that the conversations with DOE indicated that new SLI projects could swapped for similarly sized SLI projects.
2. J. Bakken (JB) asked if the SLI program could help with the cooling issues experienced at the Grid Computing Center. RO responded that the scope and time frame made that unlikely to be a suitable candidate.
3. There was a consensus that possible SLI candidates should be investigated to determine if they fit the SLI criteria.

PEMP Notable Outcome

1. After a review of proposed FY13 Notable Outcome of "Create a master plan integrating the future, facility stabilization and reutilization", it was suggested by A. Harris that the Muon Campus be included as a notable outcome in future PEMP documentation. The lab agreed to review.
2. After discussion, the consensus was that a master plan is seen as a useful tool for the Laboratory.

Master Planning Task Force Charter and Path Forward

After a review of the charter, the following topics were discussed:

1. It would be helpful to obtain master plans from other national laboratories in order to see examples of what has been done;
2. S. Henderson (SH) indicated that consultants may be able to effectively drive the master planning process by pulling the information from stakeholders and develop a cohesive plan.
3. Young-Kee Kim (YKK) indicated that she may be able to solicit help in this process from Argonne and the University of Chicago when appropriate. She also noted that the FRA/University of Chicago should be engaged in this effort. RO suggested that the lab further assess this effort before bringing in others.
4. A. Harris (AH) will likely be assigned as the DOE liaison to the Master Planning Task Force for this effort.
5. J. Anderson (JA) noted that the planning horizon for the master plan needs to be determined. The possibility of a short range, mid-range and long term horizons were discussed.
6. After discussion, it was noted that the following facilities should be included in the master plan:
    - The Physics Integrated Engineering Resources building that consolidates the engineering and tech functions for the Particle Physics Division;
    - The Office/Technical building needed for the consolidation of Accelerator Division functions;
    - Long Range Radioactive Storage Building.

Laboratory Architect

RO provided an overview of the need for a continuity of the Laboratory's architectural heritage and the benefit of a designated Laboratory Architect. It was noted that a proposal has been developed for this position and is awaiting action by P. Oddone

B. Action Items from This Meeting

1. Develop a proposal for creating a master plan (RO.

D. Next Meeting

To be scheduled

Master Planning Task Force (MPTF)

July 17, 2012

Fermilab

Agenda

- Central Utility Building reliability
- Science Laboratory Infrastructure projects
- FY13 PEMP Notable Outcome for Master Planning
- MPTF charter review
- Designation of Laboratory Architect

Central Utility Building (CUB)

Fermilab

CUB function

- Plant Constructed 1969 to 1970 (42 Years Old)
  - Operational August, 1970

Fermilab

CUB systems

- Chiller Plant 6,000 tons Capacity (21 Megawatts)
  - Process (Chillers #2 and #4 @ 1400 Tons each, HX1 @ 1800 Tons)
  - Comfort (Chillers #1 and #5 @ 800 Tons each, HX2 @ 800 Tons)
  - Linac (Chiller #3 @ 750 Tons, HX3 @ 750 Tons)
  - Tower condenser heat removal (7 Towers @ 900 Tons Ea.)
- Hot water boilers: Footprint heat and hot water
  - Boiler #1 Replaced 2010, on line Nov. 2011 (10.04m Btu); Boiler #2 Rebuilt 2011, 13m Btu)
- Low Conductivity Water
  - Three cooling loops: 55 degree, 95 degree Booster; 95 degree AP
  - Deionization System (5 to 14 mega ohms)
  - De-oxygenation System (5.0 to 10 ppb)
- Monitoring and Control
  - Johnson Controls Metasys building automation control system; Major upgrade required due to obsolescence
  - Most systems monitored and or controlled
    - Chiller and circulation pump back up sequence control
    - Water Softener monitoring and operation
    - Cooling Tower operation, makeup and deicing protocol
- Emergency Generator (partial for hot water circulation and boiler operation)

Cooling Schematic

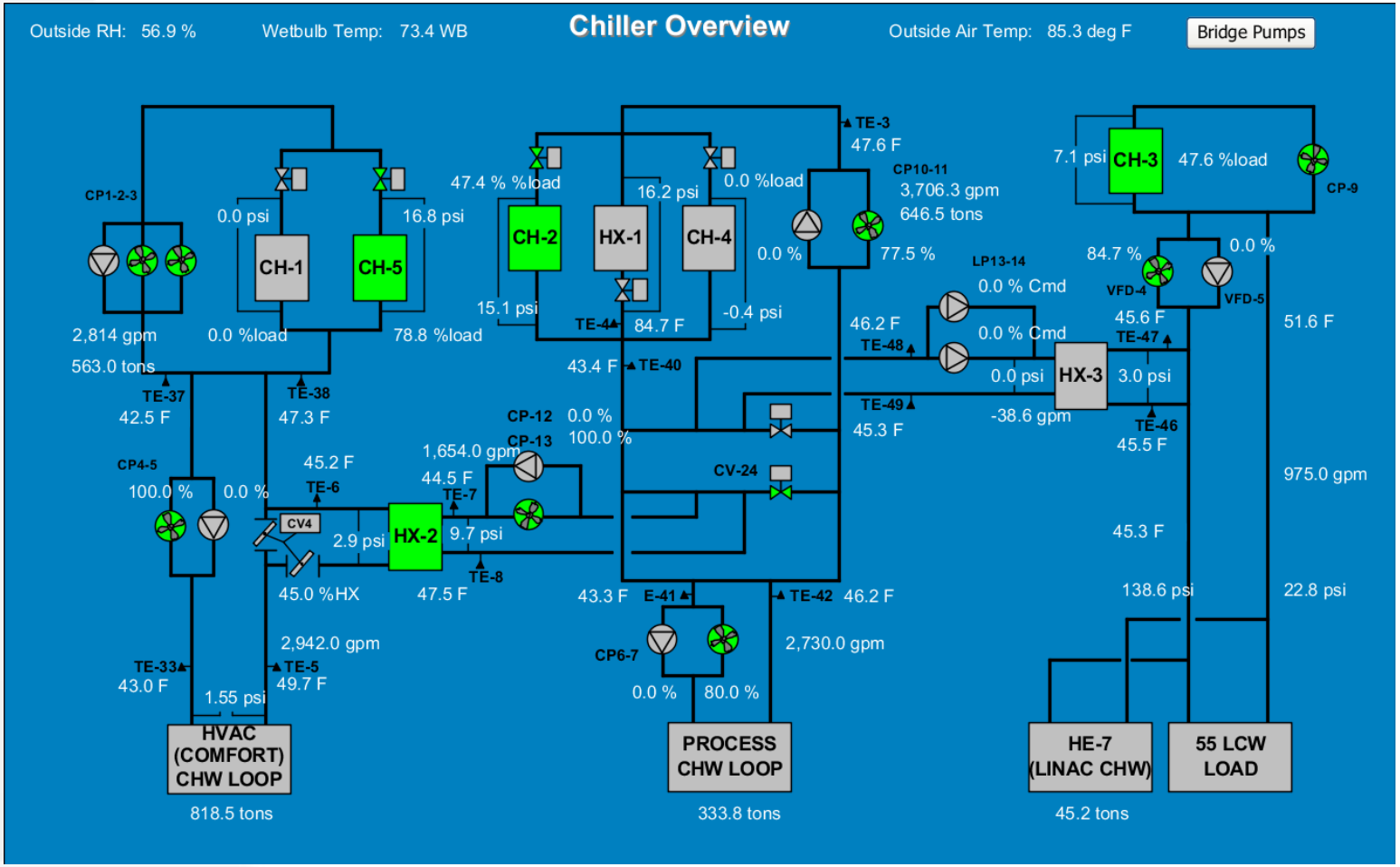

Fermilab

Cooling Tower Schematic

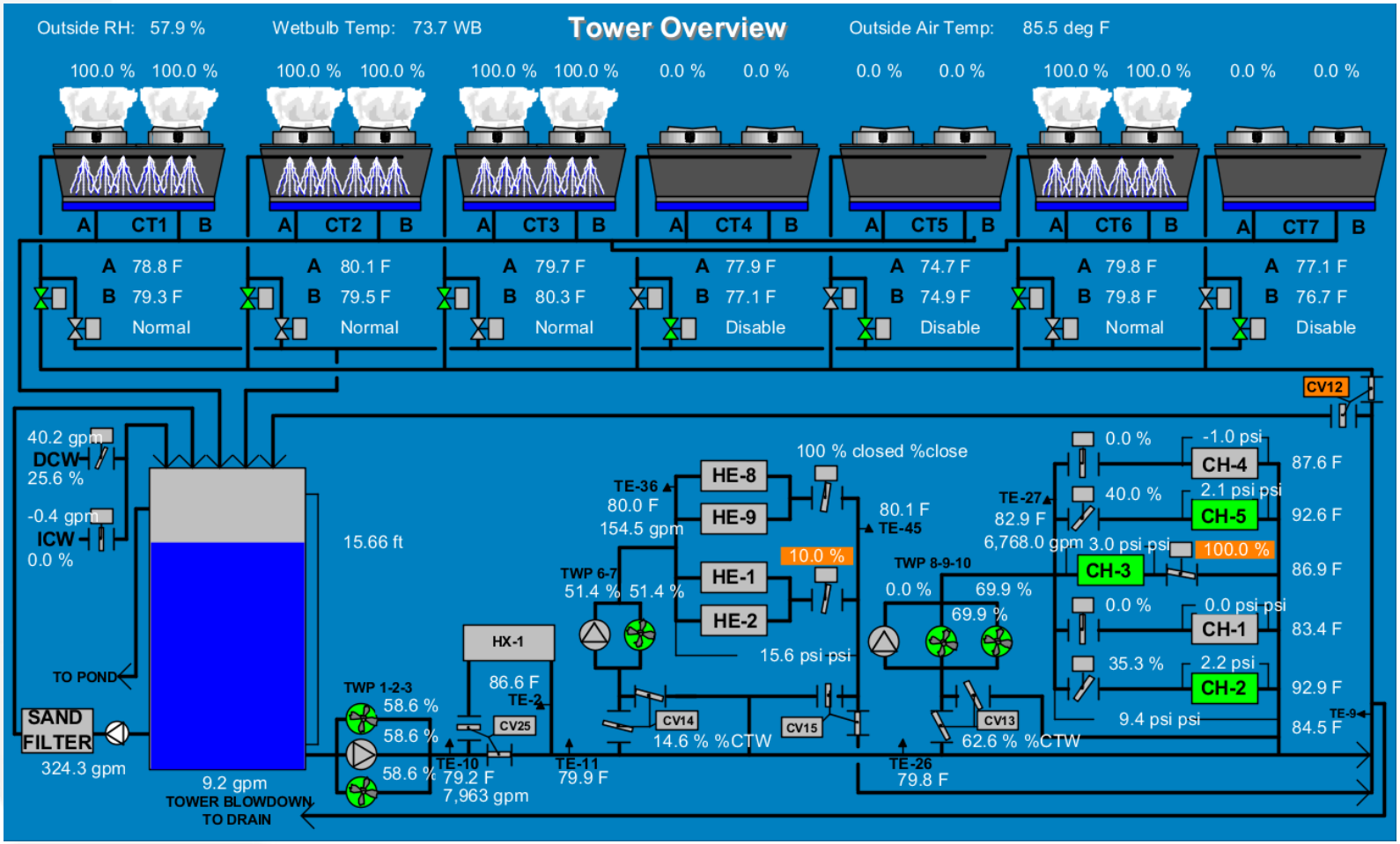

Fermilab

CUB Vulnerabilities

- Vulnerabilities
  - 55 Degree LinAcc Chiller (#3)
    - Started 1995, rebuilt in 2007, runs 24/7
    - No redundant Chiller/primary circulating pump
      - Single point of Failure
    - HX3 unable to maintain desired 45 degree temp
  - Chiller #4 started 1998
  - Chillers #1, 2, 5 started 1999
  - Muon (PBar)
    - HE-9 Plate and Frame
      - Single Point of Failure
    - HE-8 Shell and Tube End of Life
  - Cooling Towers
    - Galvanized Tower Sections Corroded
    - Tower Fill Deteriorated
- Future Investment
  - Aging facility which will need retrofitted as part of refitting the laboratory beyond 2015
    - Equipment has over ten years of 24/7 run time
    - Building glass curtain wall replacement
    - Urgent Cooling Tower repairs needed ($1.2M in FY13)

SLI UUP

- Science Laboratory Infrastructure (SLI)
- Utility Upgrade Project (UUP)
- Handout OMB 300 excerpt
- Scope (Mission Need)
  - High Voltage Electrical Master sub replacement
  - Industrial Cooling Water piping
  - CUB work scope not able to be included
- Funding profile
  - FY13- $2.5M, FY14- $12.45M, FY15- $19.95M

Future SLI

- Industrial Facilities Consolidation project
  - ATEAM (Accelerator Technology and Advanced Machining Center)
- Status – in hopper but not in SLI funding profile
- Flexibility – can swap projects at same dollar value
- Future of SLI – expected to continue
- Possible funding source for future infrastructure projects

FSO Proposed FY13 PEMP Notable

- Goal 7.0
- Create a Master Plan integrating the future, facility stabilization, and reutilization.

- Other prods
  - HEP interest in Site Planning and recent tour
  - FSO Mid year review "opportunities"
  - SC feedback on Fermilab FY12 Annual Laboratory Plan
    - Link scientific plan to real facility needs
    - Invest to optimize the critical assets

Master Plan Defined

- A plan to achieve a vision
  - Intensity Frontier, Facility Stabilization, Reutilization, and strategy for investment
- A big picture long duration look to guide efforts
- A roadmap to bring all the pieces together
- A contract between interested parties
- A marketing tool for educating stakeholders to see reality of their investment (funding source)

- ANL and SLAC (multi-year and $multi-million)

Master Planning Issues

- Identification of existing inventory, uses, and condition
- Future mission expansions possibilities
- Reutilization/Demolition opportunities
- Infrastructure support requirements (Mission Readiness)
- Land use strategy/management and future use changes
- Design guidelines (form, function, aesthetics)
- Compatibility of lab "neighborhoods"
- Flexibility without conflict
- Identification of funding mechanisms (SLI link)

Master Plan Content

- Laboratory today
- Strategic direction and objectives
- Framework for the plan (technical, financial, regulatory)
- Elements of the Plan
- Design Principals
- Design Guidelines
- Review Procedures and approvals

Master Planning Task Force (MPTF)

- Established 2009
- To help lead the transition at this point in the lab history
- Many things were and are still in play
- Necessary for proper coordination, guidance, and oversight
- Manage today….but…
- Ultimately define requirements of a master plan, support funding, participate in development, and ensure compliance

Master Planning Task Force (MPTF) Status

- Website created that includes meeting minutes – maintained by Young-Kee
- Has served a tactical need but will need to become more strategic to meet FY13 PEMP notable outcome
- Can continue to serve a tactical (near-term) need while beginning to focus each meeting on master plan (strategic) development

Proposed Designation of a Laboratory Architect

- Serve the Master Planning Task Force including augmenting master planning activities (FESS employee)
- Develop a strategy for continuity of architecture while preserving the original vision
- Communicate architectural vision and it's applications
- Participate in development, evaluation and finalization of building design and site selections

Take Away's

- A real opportunity to better inform and plan for the future while preserving our rich scientific heritage
- Review Master Planning Task Force Charter
  - Identifies a responsibility for developing a master plan
- FY13 PEMP notable helps drive this among competing priorities (long term vs. near term needs)
- Designation of a Laboratory Architect can help organize this direction and development
- It will take resources ($100k's not $millions)
- We'll be back to discuss a path forward

CHARTER

Laboratory Director's Task Force on Master Planning

Fermi National Accelerator Laboratory

1.0 Introduction

Master planning is of critical importance as a process to help define and best use all laboratory resources to most effectively meet Fermilab's future mission. Femilab is at an important transitional point in its history. The Tevatron and Collider experiment operations are scheduled to cease in the near future, planning for several projects has begun, and the Neutrino program will soon expand with startup of the NOνA experiment now under construction.

There are many new requirements and activities that interact with planning which include:

- Fermilab Steering Group Report
- Office of Science Annual Lab Plans
- Missions Readiness Peer Reviews
- American Reinvestment and Recovery Act
- New Construction Grants from the State of Illinois
- Anticipated mission need (CD-0) approvals on several projects
- Congressionally mandated space offsets
- Anticipated long lead environmental permitting
- High interest community involvement, and
- Preservation of the lab's scientific/architectural heritage

These requirements and activities make high level planning, coordination, and communication critical to ensure the laboratory is best prepared to successfully meet the challenges of this transition moving rapidly into the next era of High Energy Physics.

2.0 Purpose

The purpose of the Task Force is to ensure proper coordination, guidance, and oversight is provided for all the identified activities that in turn allow the laboratory to most efficiently use its existing resources to effectively meet the identified future mission while preserving Fermilab's rich scientific and aesthetic heritage. This will be accomplished with informational briefings of all known requirements and activities, status updates on the same, developing clear

guidance, and communicating milestones to monitor progress. Ultimately development of a site wide master plan to guide these efforts is the objective.

3.0 Membership

The Fermilab Deputy Director shall be a member and serve as the Chairperson of the Task Force. The Facilities Engineering Services Section (FESS) Engineering Department Head shall serve as special advisor and secretary to the Task Force. Task Force members shall include the Director, Chief Operating Officer, Associate Directors, Division Heads, and FESS Head. Additional members may be appointed by the chairperson, and committees or working groups may be assigned outside of the membership to provide support to the Task Force.

4.0 Responsibilities and Duties

4.1 Understand the basis of design for the original laboratory's land uses, experimental areas, and other architectural/engineering components. This includes what is referred to as the green book "Development Report, August 1971, DUSAF".

4.2 Ensure lab wide participation for development of an inventory of all laboratory Facilities and Infrastructure and the current uses. The Fermilab Building/Mission matrix identifies all buildings by landlord and current use, attempts to identify possibilities for future uses, and list the number of workstations available in each building.

4.3 Prior to development of the Master Plan, the Task Force shall be informed of "all" changes in building usage including enclosures and tunnels regardless of duration or size. This will ensure that all known laboratory requirements are considered before allowing for reuse or demolition of space. Communicate this requirement to the laboratory.

4.4 Be Familiar with the Fermilab Geographic Information System and its use in planning for future project possibilities and preliminary site selections. The Task Force shall review and recommend proposed project site selections for all new projects. Consideration of all known requirements and activities including the routing of new utility systems, roadways, and other infrastructure should be included.

4.5 Review the Annual Lab Plan for compliance with and coordination of all known requirements and activities. This will include Mission Readiness capabilities and plans.

4.6 Define the requirements for a site wide master plan, support funding of the master plan, participate in the development and completion of the master plan, and recommend methods to ensure laboratory compliance with the master plan.

5.0 Procedures

5.1 The Task Force shall recommend the list of briefings necessary to ensure all information is available and understood to fulfill the responsibilities and duties of Task Force.

5.2 The Task Force secretary will work with the Task Force Chairperson to publish meeting agenda in advance of each meeting and publish meeting minutes.

5.3 In connection with the conduct of business, the Task Force shall meet regularly for the primary purpose of developing a site wide Master Plan. Prior to completion of the Master Plan, the Task Force should be aware of the progress on all activities to ensure existing space and project locations are compatible with the lab's transitioning future.

6.0 Changes to Charter

This charter shall be periodically reviewed by the Task Force to ensure its content continues to meet the current requirements and activities affecting Fermilab. The Task Force may recommend changes to the charter but only the chairperson can authorize changes.