CKM SC RF Cavities Fabrication Status

Goals for 2003:

- Build CKM 13-cell cavity
- Build cryostats for CKM cavities
- Develop, design and build elements of cavity fabrication infrastructure
- Develop elements of cavity test infrastructure
- Develop a microphonics compensation system

CKM (**C**abbibo, **K**obayashi, **M**askawa) Project Web Site: http://www.fnal.gov/projects/ckm/Welcome.html

CKM (E921) WWW Server

CKM (Charged Kaons at the Main-Injector) is a fixed target experiment at Fermilab designed to measure the branching ratio of the rare charged kaon standard model decay K+ -> pi+ nu nubar.

The Experiment

Physics - The CKM Physics goals in words and pictures.
Masthead - The current CKM author list
Collaborators - Names, addresses, phone numbers and Links to collaboration members' personal web pages
Detector - Description and status of the detector and other useful information
Proposal - CKM's submissions to and interactions with the Fermilab PAC
Publications - Published papers, talks and preprints
Fermilab Workbook entry - Short description of CKM for the Fermilab Research Program Workbook
Superconducting RF Cavity R&D - about the SCRF (some links protected)
Jlab VVS testbeam website clone - CKM's work space (some links protected)
CKM at Work - CKM's work space (some links protected)

Separator Principles

A mix of protons, pions, and kaons after a target of the same momentum but of differing speeds. Speed selection is accomplished by two RF stations that are designed to provide transverse deflection. The resonant frequency, the relative phase, and the distance between the stations are selected so that kaons will be transmitted to the users, while pions and protons will be rejected.

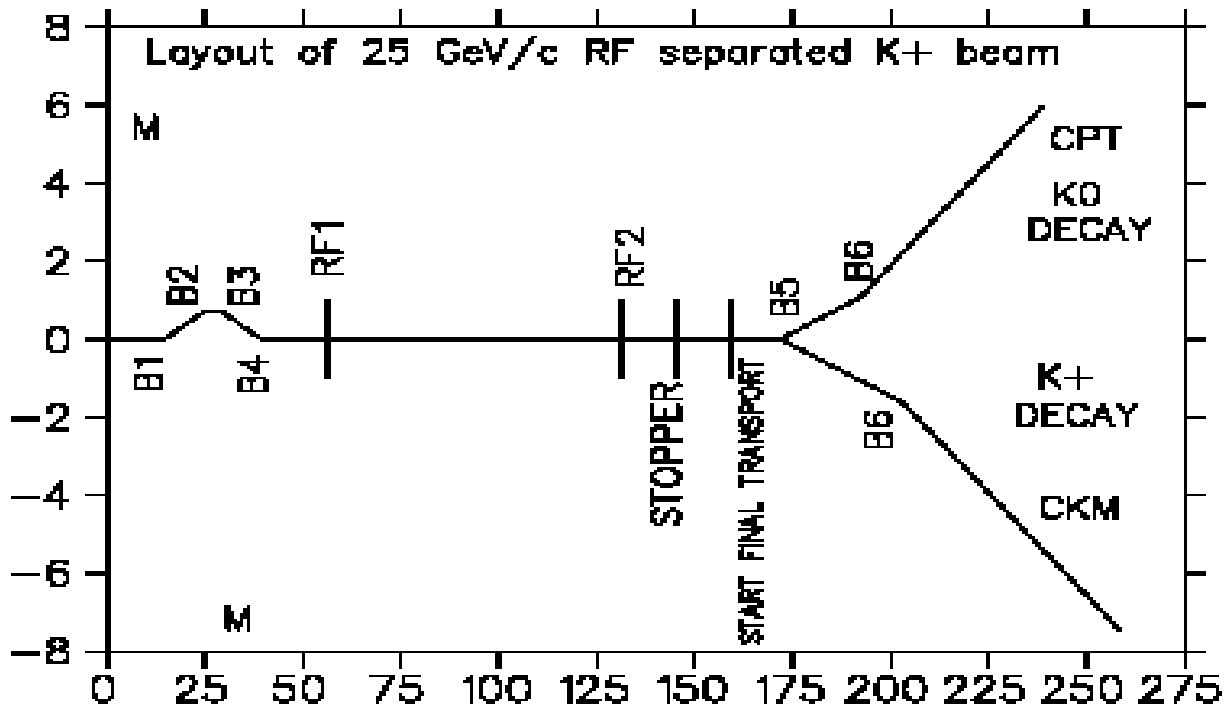

Figure 2.1: Plan View of the K^+ Beam

CKM Prototype Cavities

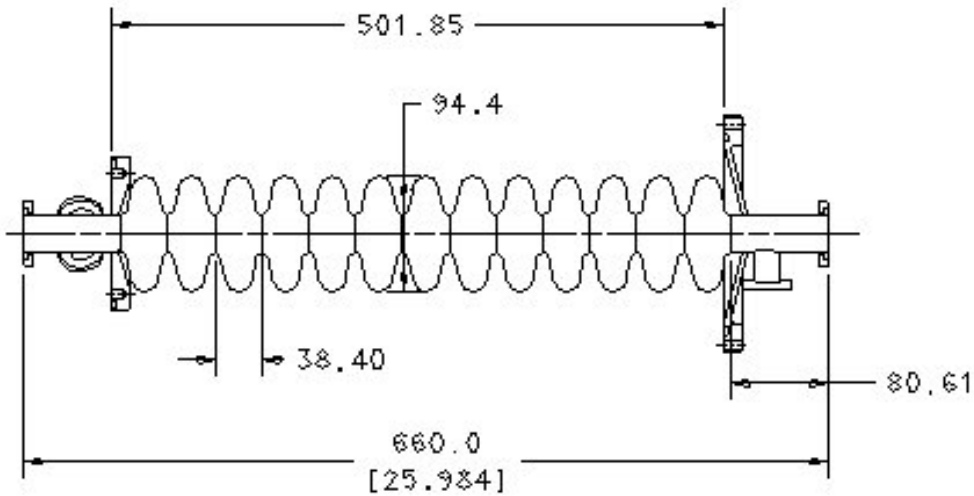

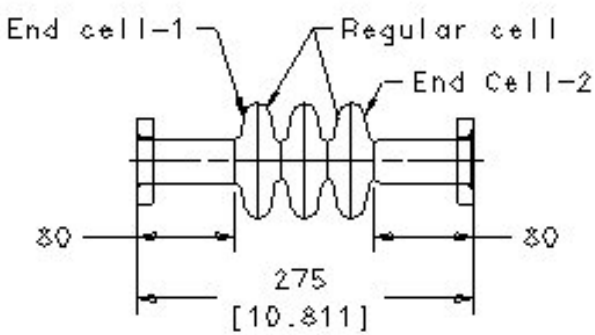

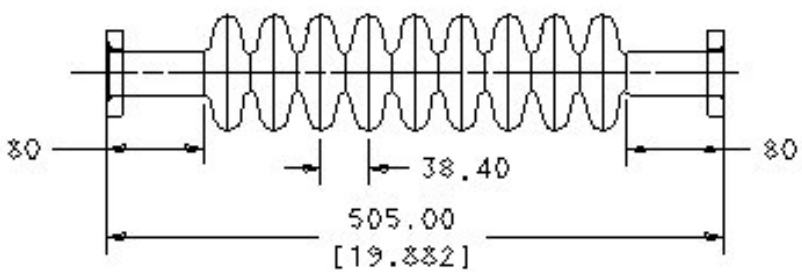

He Vessel Assembly

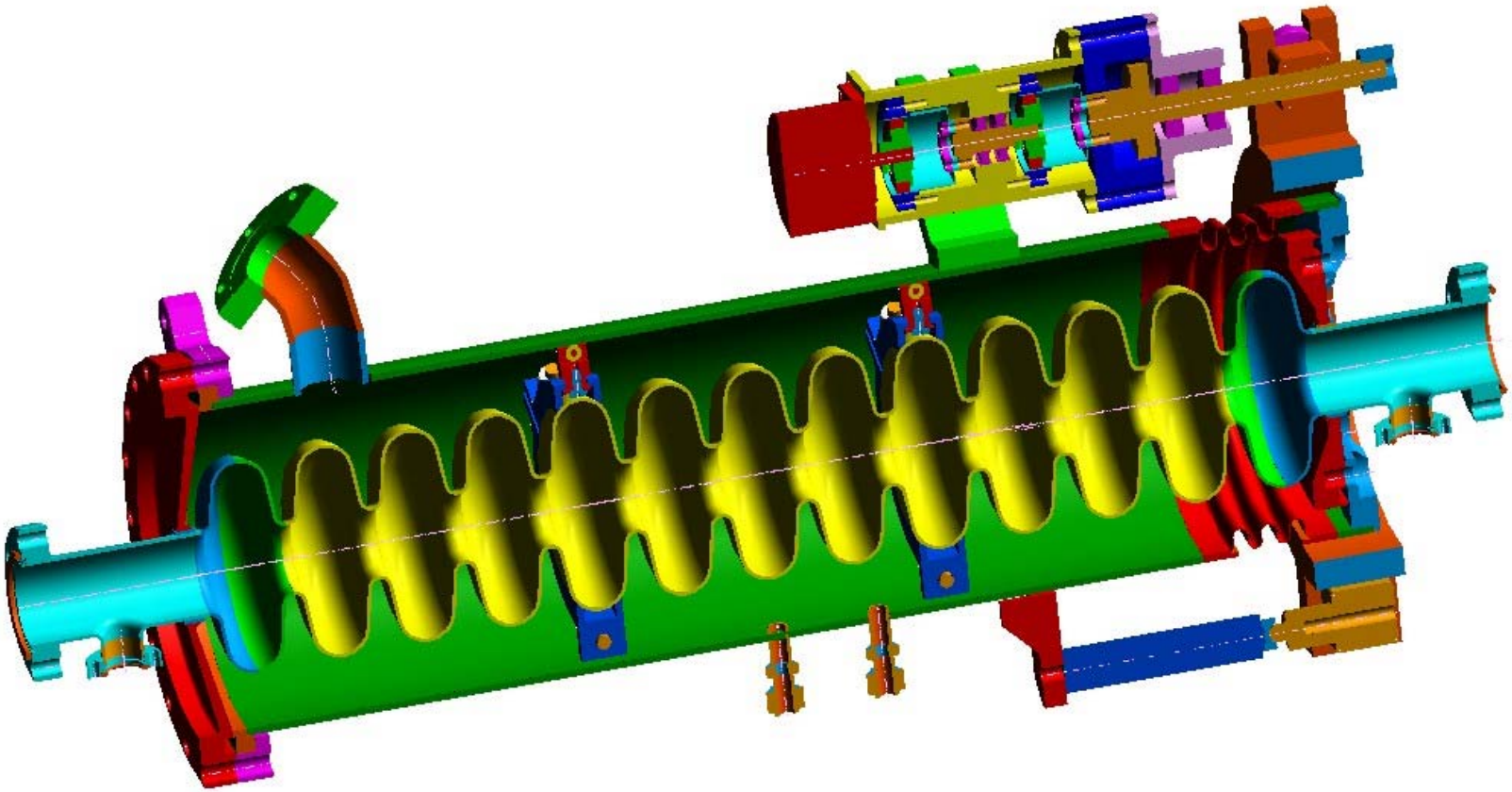

Magnetic Screen

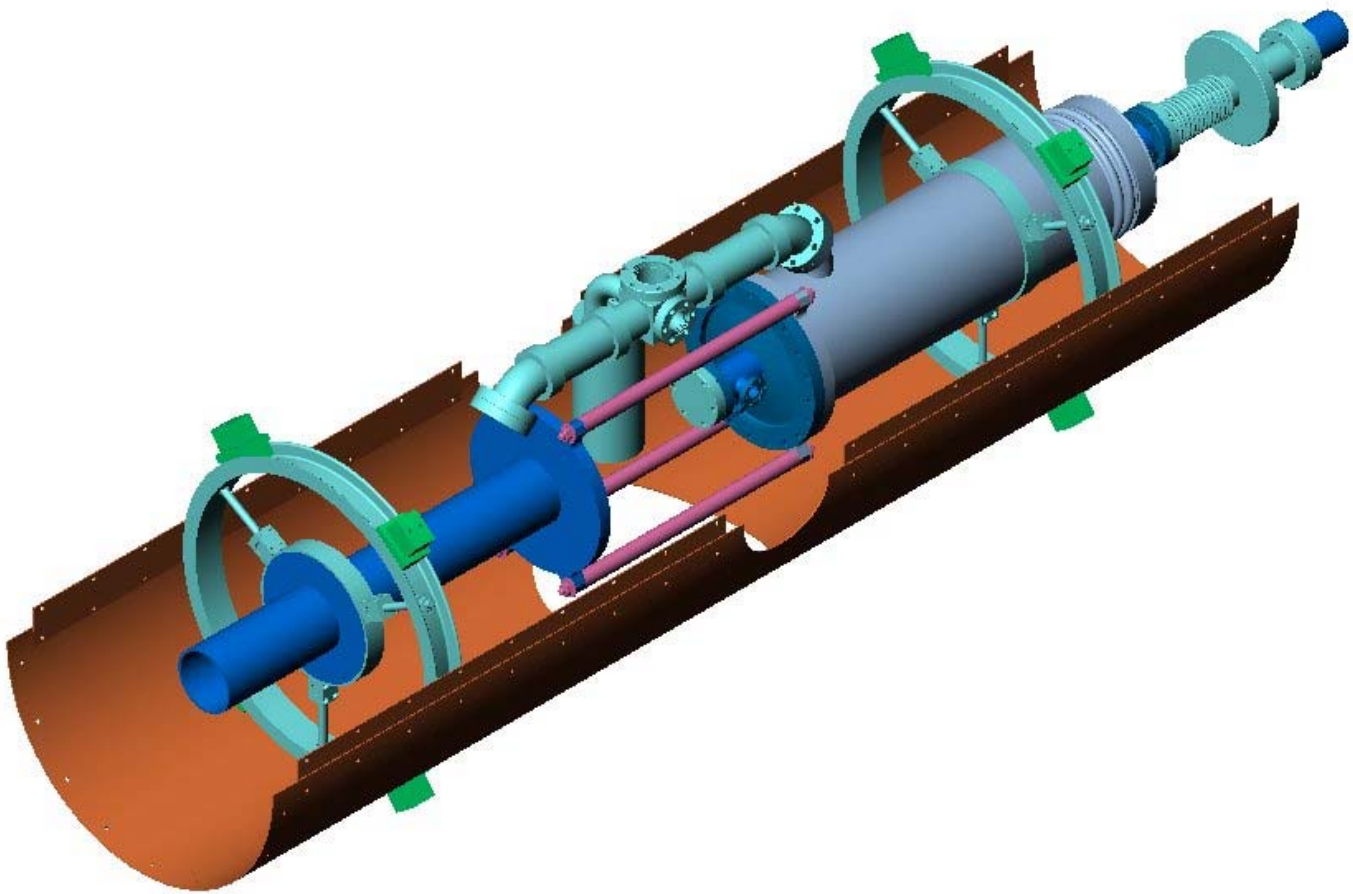

Assembled Cryomodule

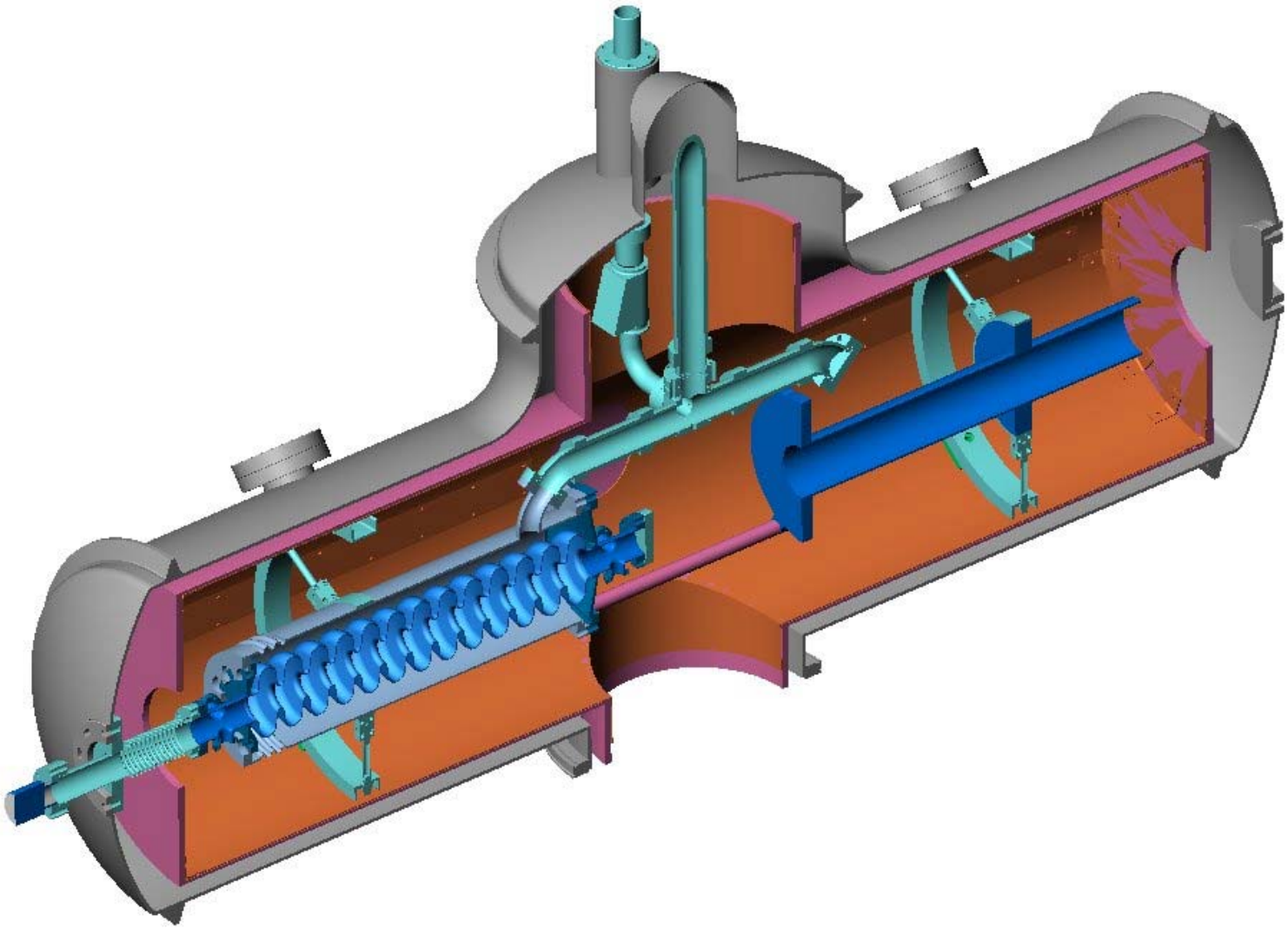

CKM: Cavity tuning

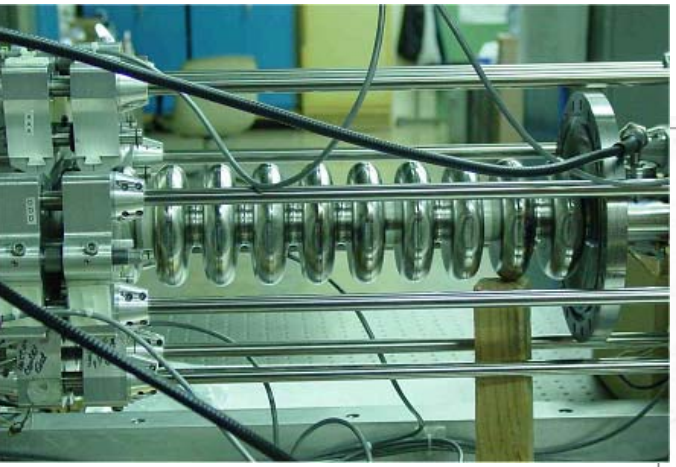

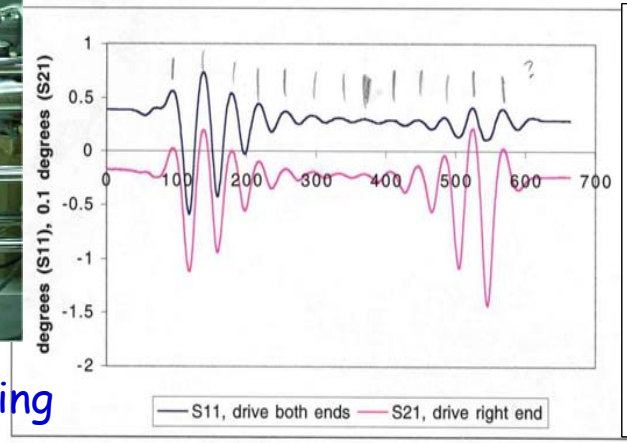

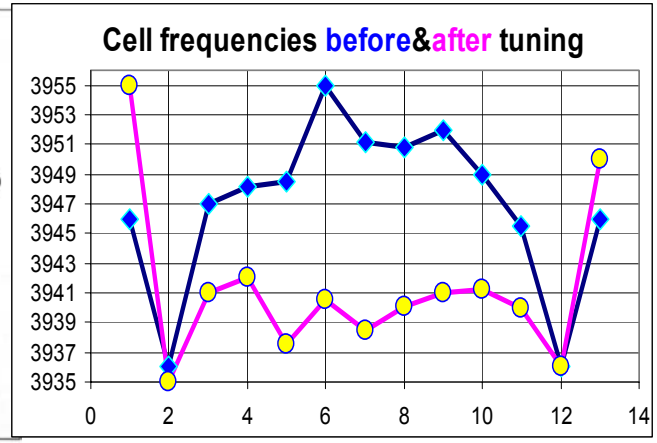

Progress in understanding, tuning and testing CKM 13 cell cavity.

- Big errors in cell frequencies after production →bad field distribution (100%)
- HFSS shows that mode separation less than width of resonance (Q~1000)
- Field distribution @300K should be M-type (20%-variation) to be flat @2K
- Tuning; 1-Cell frequencies (plunger set-up). 2–field distribution (bead-pull setup)
- Proving of HFSS calculation: checking at 70K (liquid nitrogen) →Q~2000.

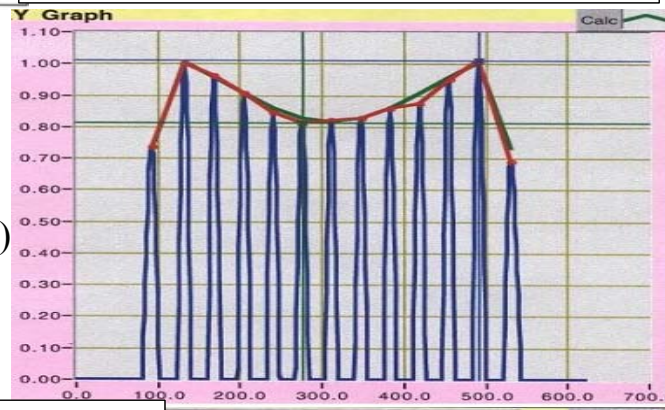

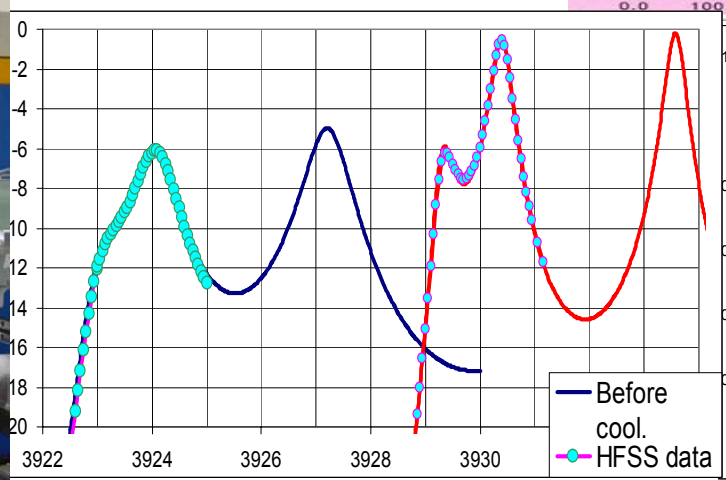

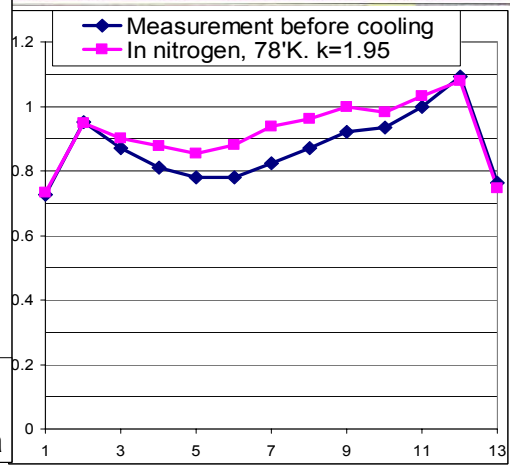

Electromagnetic Analysis

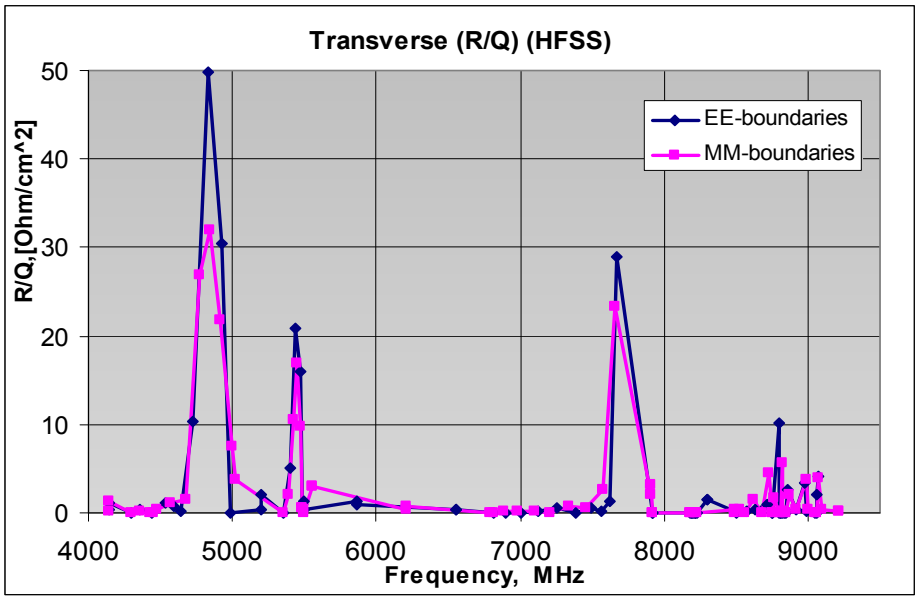

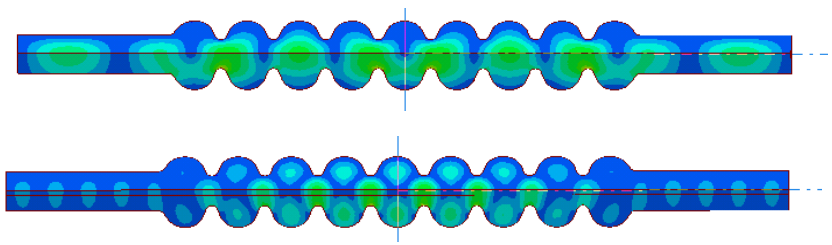

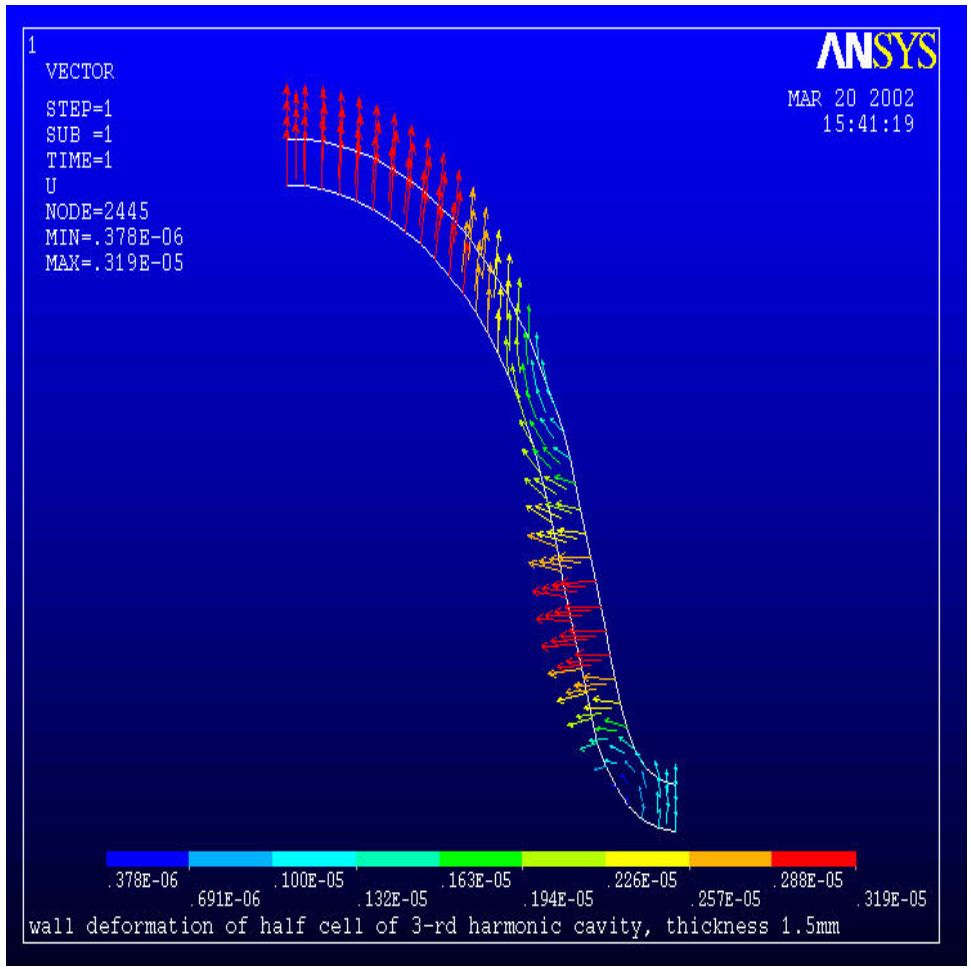

Buffered Chemical Polishing

1 volume part of Hydrofluoric Acid (49% HF),

1 volume part of Nitric Acid (69.5% HNO_3),

2 volume parts of Orthophosphoric Acid (85% H_3PO_4)

In this mix the Nb etching rate is about 1 μm per minute at 15°C (59 F).

$2Nb + 10HNO_3$ --- $Nb_2O_5 + 10NO_2 + 5H_2O$

$Nb_2O_5 + 10HF$ --- $2NbF_5 + 5H_2O$

$10HF + 2Nb$ --- $2NbF_5 + 5H_2$

Cavity in an Etching Jacket

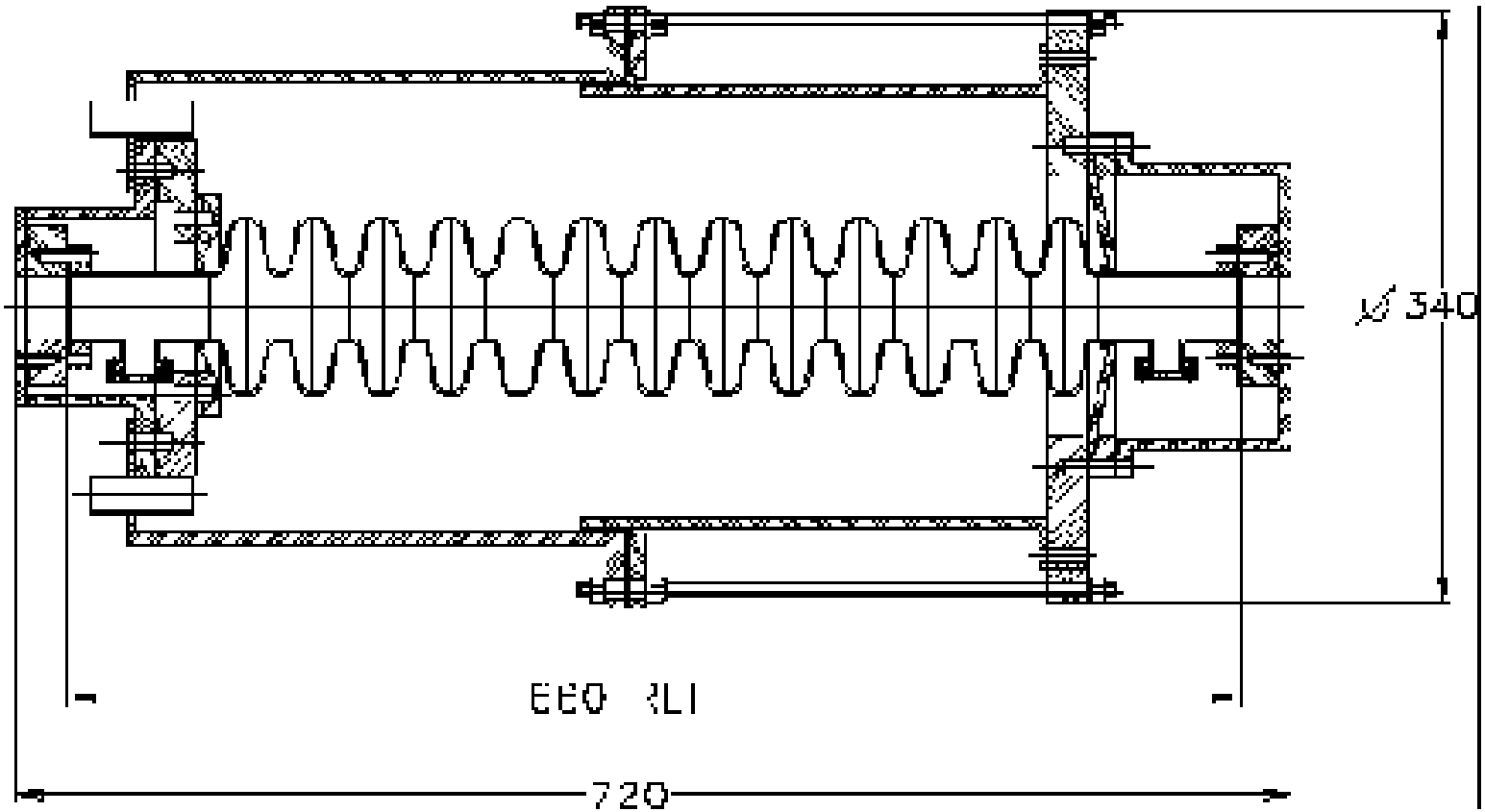

1-cell Cavity in the Etching Jacket

BCP Facility. Hydraulic Scheme

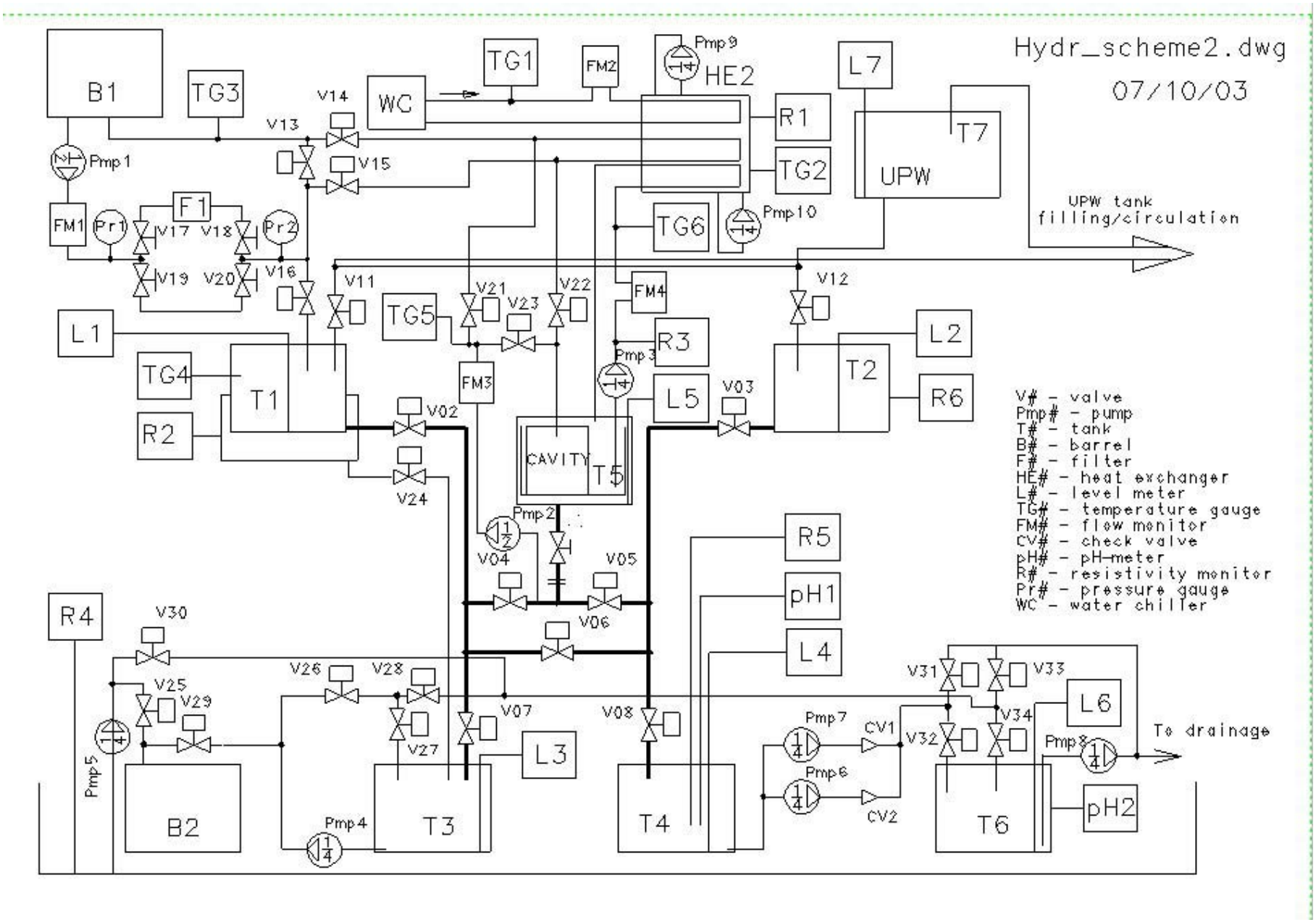

Facility Layout at ANL

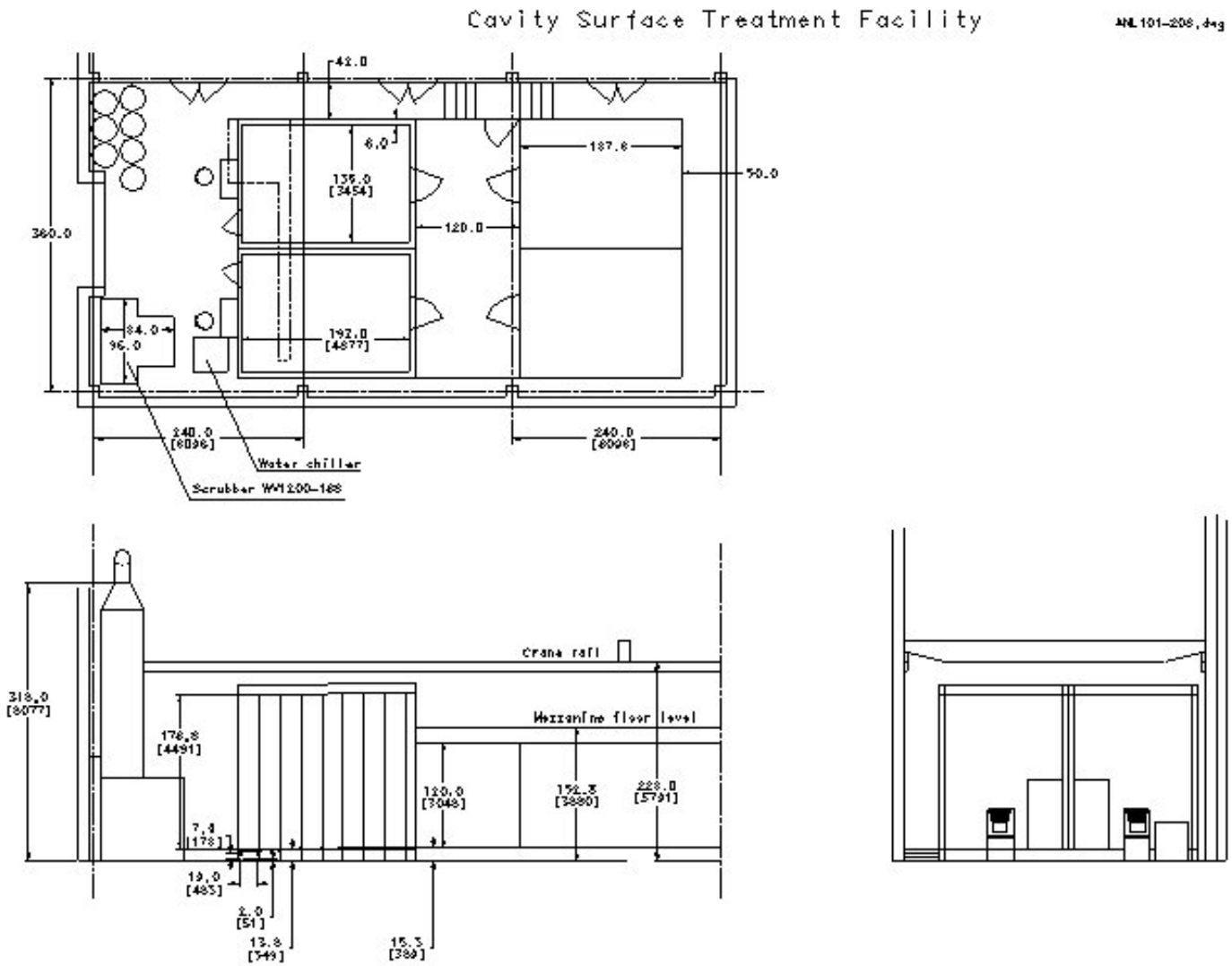

BCP Facility Development
Nearest Goals

- Control System Development
- Control System Programming
- Process Facility Detailing
- Equipment Procurement
- Equipment Test
- Process Test (using mockup)

Control Panel

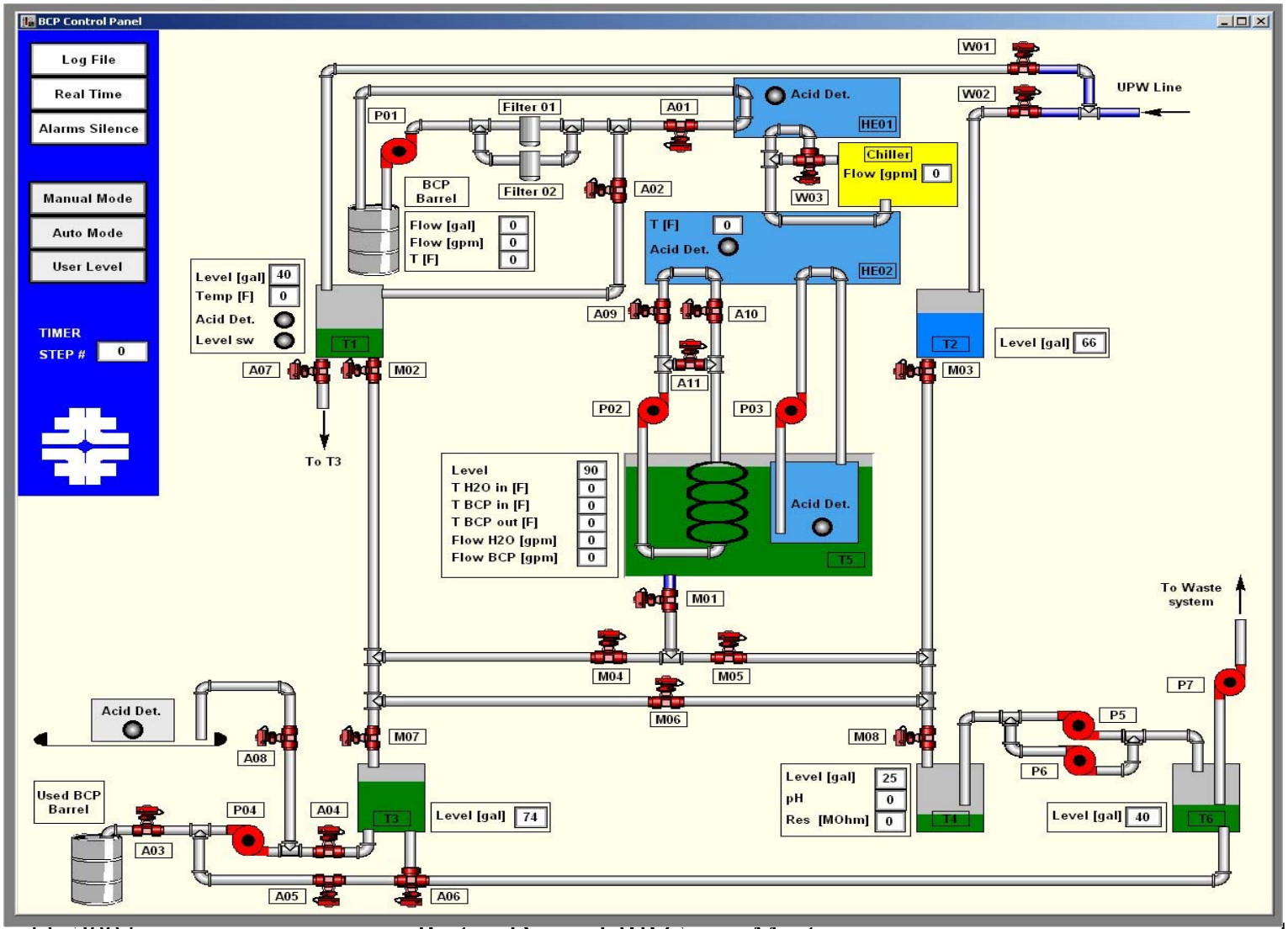

Mockup at MDL

Process Control Panel