SiD Status

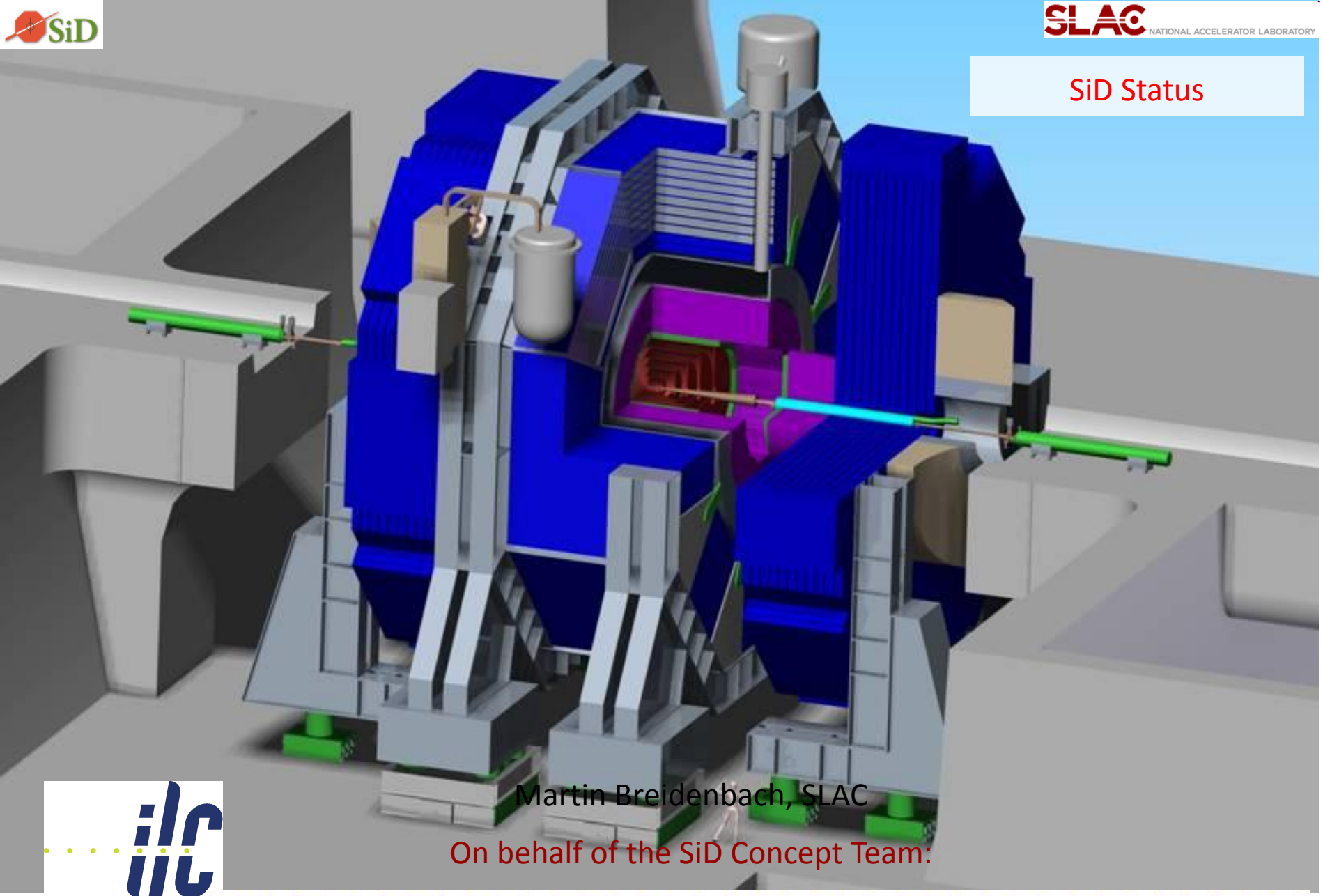

Martin Breidenbach, SLAC

On behalf of the SiD Concept Team:

http://silicondetector.org

Outline

- SiD Overview
- SiD Subsystems & Status
  - VXD & Tracker
  - ECal
  - HCal
  - Muon system
  - Forward Systems
  - MDI
- Costs
- Conclusions

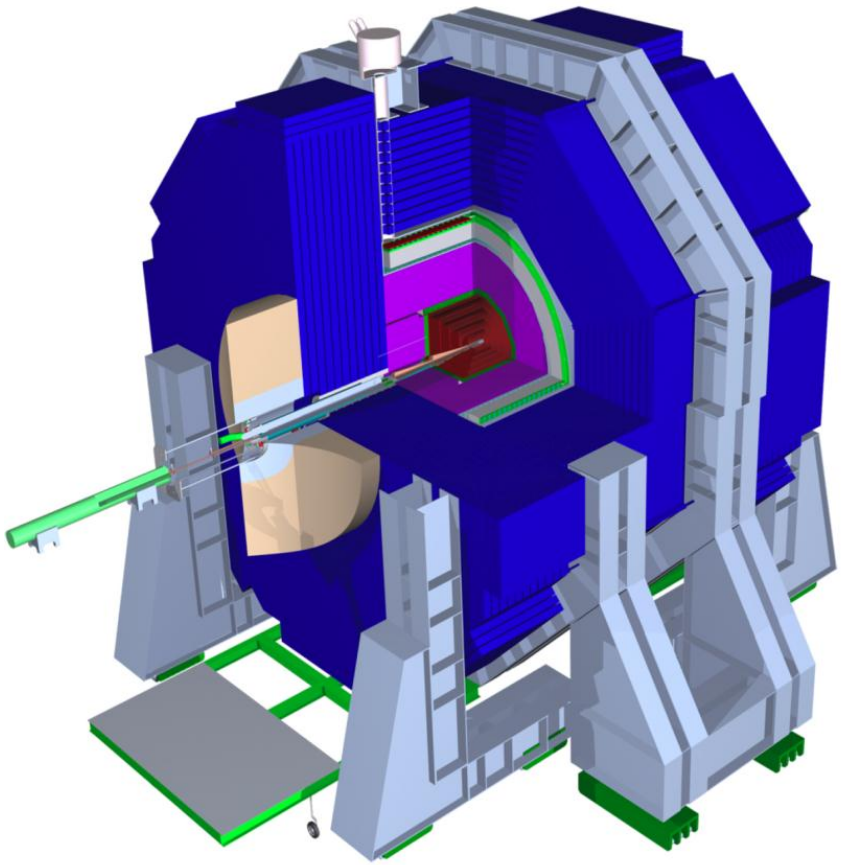

The SiD Design

A compact, cost-constrained detector designed to make precision measurements and be sensitive to a wide range of new phenomena.

--> Compact design with 5T field.

--> Robust silicon vertexing and tracking system – excellent momentum resolution, live for single bunch crossings.

--> Calorimetry optimized for jet energy resolution, based on a Particle Flow approach, “tracking calorimeters”, compact showers in ECal, highly segmented (longitudinally and transversely) ECal and HCal.

--> Iron flux return/muon identifier – component of SiD self-shielding.

--> Detector is designed for rapid push-pull operation.

The SiD Detector

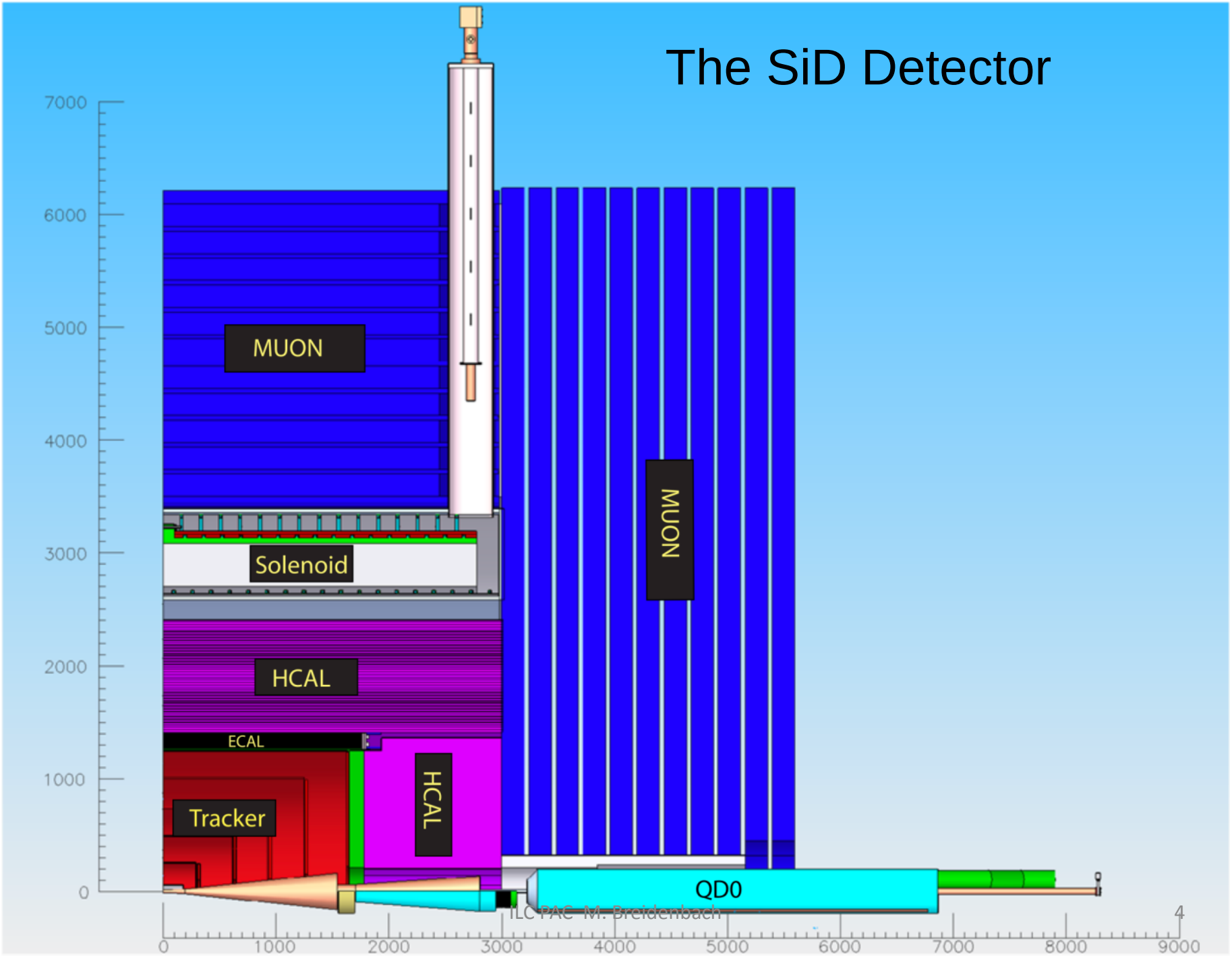

SiD Global Parameters

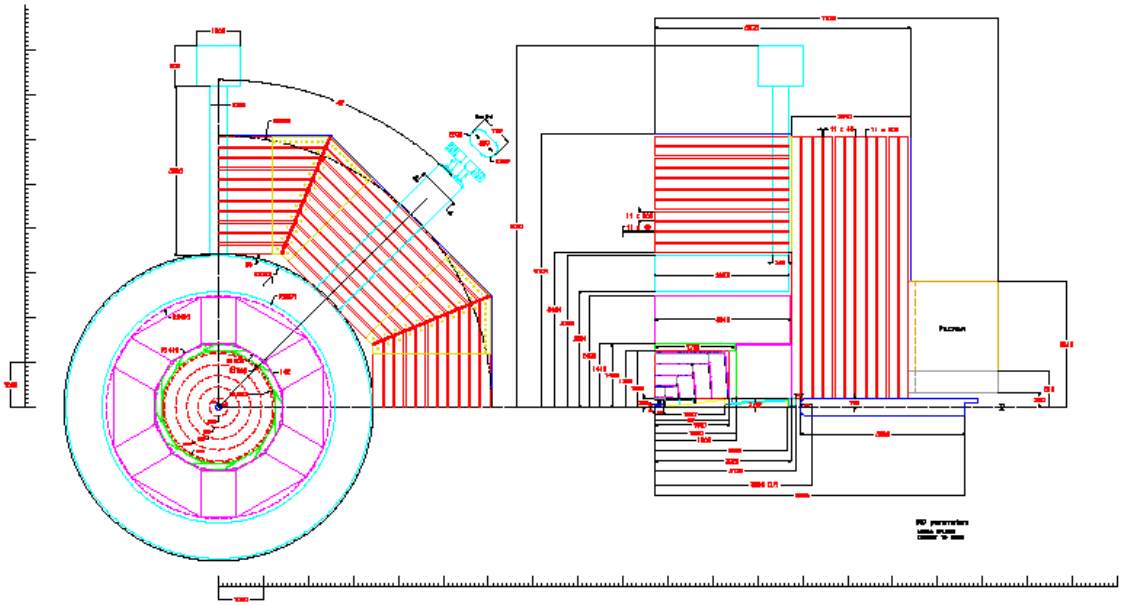

Detector	Technology	Radius (m)		Axial (z) (m)	
		Min	*Max*	*Min*	*Max*
Vertex Detector	Pixels	0.014	0.06		0.18
Central Tracking	Strips	0.206	1.25		1.607
Endcap Tracker	Strips	0.207	0.492	0.85	1.637
Barrel Ecal	Silicon-W	1.265	1.409		1.765
Endcap Ecal	Silicon-W	0.206	1.25	1.657	1.8
Barrel Hcal	RPCs	1.419	2.493		3.018
Endcap Hcal	RPCs	0.206	1.404	1.806	3.028
Coil	5 tesla	2.591	3.392		3.028
Barrel Iron	RPCs	3.442	6.082		3.033
Endcap Iron	RPCs	0.206	6.082	3.033	5.673

Combining barrel and endcaps these trackers and calorimeters cover $|\cos\theta| \leq 0.99$

LumiCal and BeamCal (described later) are used for $|\cos\theta| > 0.99$

SiD Design Study Organization

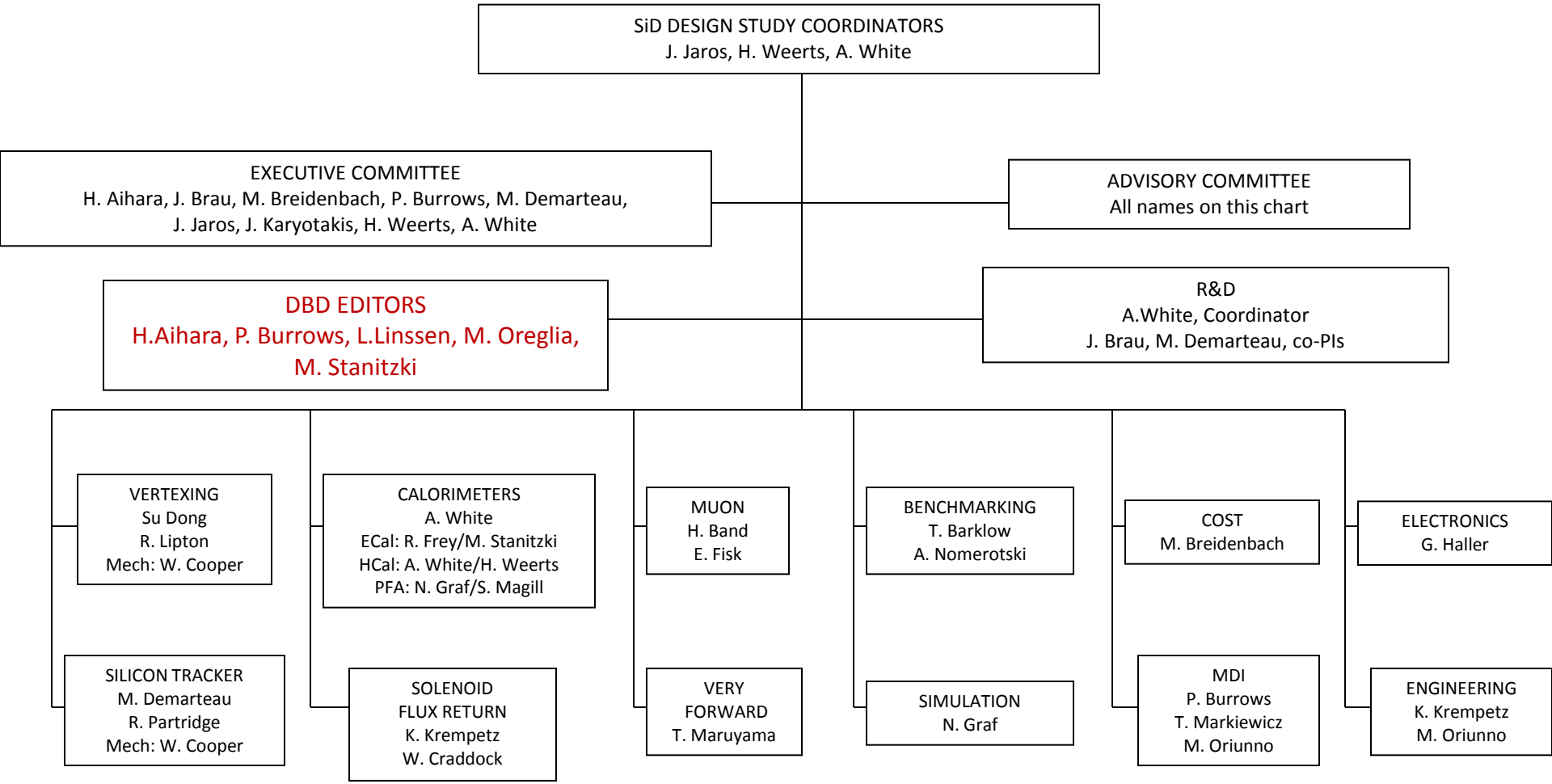

-> Note: essentially all part-time/senior/motivated/busy people!

-> Current focus on preparation/organization for DBD for ILC (CLIC CDR done).

-> Last SiD Workshop: December 14-16, 2011 @SLAC; Next: 21-23 August, 2012 @SLAC

Participating Institutions:
PLUME, SiLC, Fermilab, SLAC, Cornell U., U. of New Mexico, U. of Oregon, Yale U.

Baseline: Silicon pixels, all-silicon barrel, carbon fiber end rings & support cylinder
Option 1: Silicon on foam sensor support
Option 2: Silicon on carbon fiber sensor support
Option 3: Silicon micro-strip outer disks (vs. pixels)

Vertex Detector Side Elevation

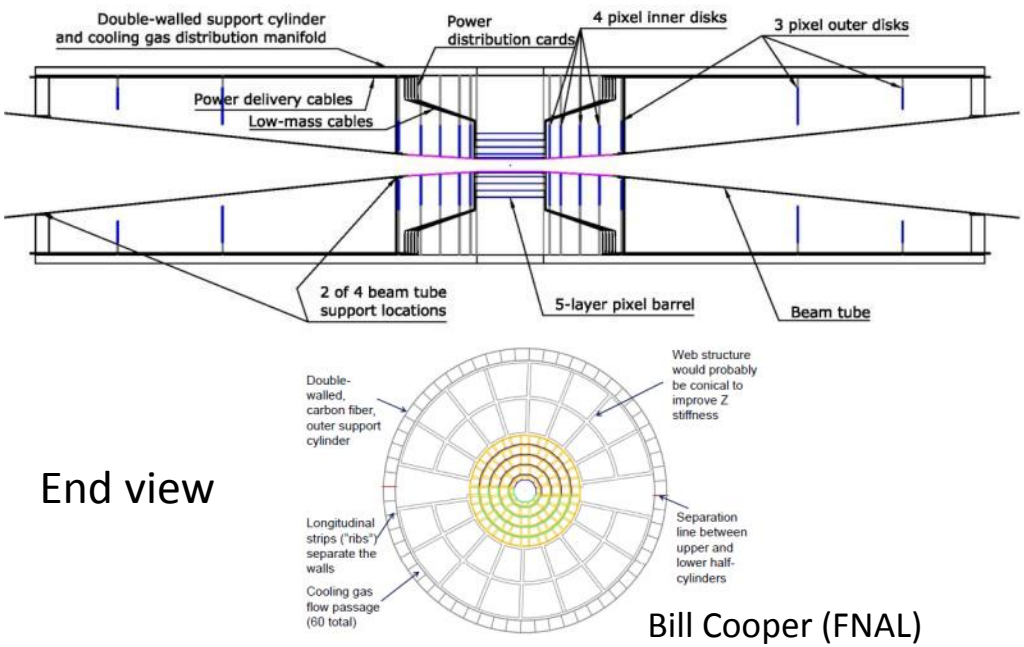

Bill Cooper (FNAL)

Area of critical R&D/goals

Sensor technology R&D: Incorporate latest developments
Low-mass structures: Demonstrate all-silicon, silicon on carbon fiber, & silicon on foam structures
Power delivery: Develop DC-DC conversion & serial power
Cooling/cabling/vibrations: Fabricate & test R&D structures for vibrations due to air cooling & pulsed power

Sensor R&D and results to date for 3D and Chronopixel

VIP 2a – 3 tier MIT-LL

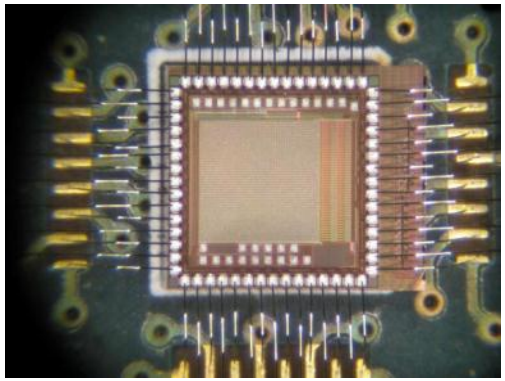

Chronopixel V1

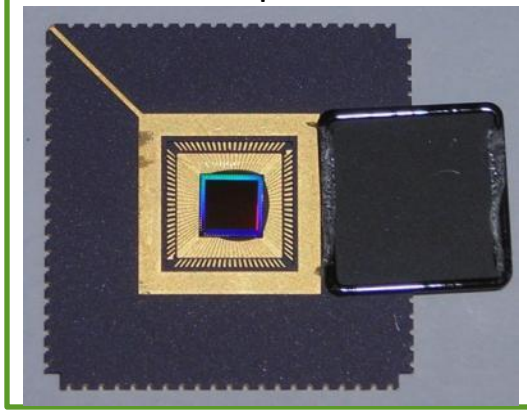

VIP 3D chip

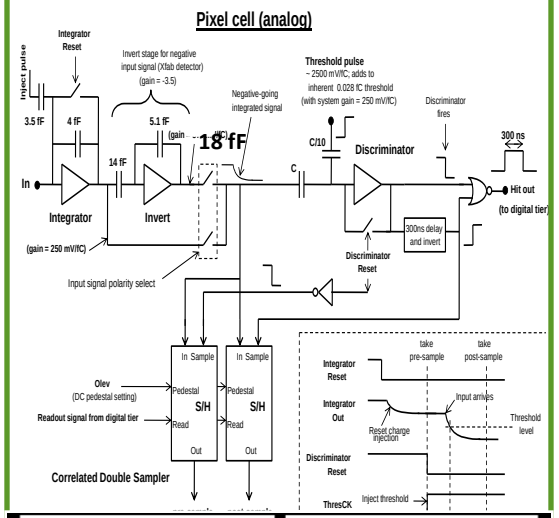

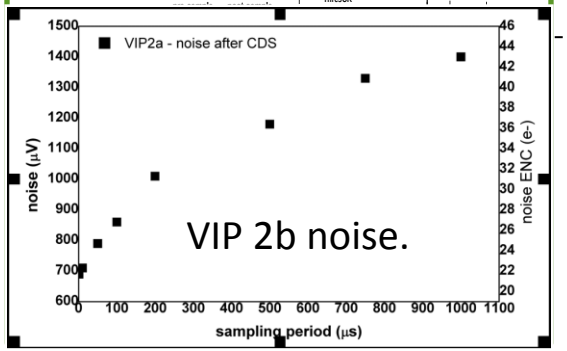

VIP

- VIP2a (3-tier MIT-LL chip) is produced and tested
- Both analog and digital sections work well, solving problems found in VIP1
- VIP2b (2-Tier Tezzaron/Global foundries) is in process.
- Initial tests of 2D test devices shows good analog performance.

noise = 8e + 0.5 e/ fF

- Sensors for 3D integration of VIP2b produced and tested.

Chronopixel

- Monolithic CMOS
- Measured noise of 24 e, specification is 25 e.
- Sensitivity measured to be 35.7µV/e, exceeding design spec of 10µV/e.
- Comparator accuracy 3 times worse then spec, need to improve this in prototype 2.
- Readout time satisfactory
- Prototype 2 May 2012, 90nm TSMC
- 2K 25x25 micron pixels

Timeline for R&D

- Sensor technology R&D: On-going Chronopixel, 3D prototypes produced
- Low-mass structures: Silicon structures of each type have been made; R&D is paused on all structures except silicon on foam, which is progressing well.
- Power delivery: R&D was expected to resume at the start of FY2012--no.
- Cooling/cabling/vibrations: R&D awaits power delivery results. B field studies? (Yale)

Results expected for inclusion in DBD

- Conceptual VTX+beam pipe design
- Plume low mass ladder results
- 3D sensor integration with readout (VIP2b chip), Chronopixel tests v2.
- CMOS MAPS and DepFET experience in STAR and BELLE
- Benefit from parallel work on e.g. CMS Track Trigger Upgrade

Issues/concerns for DBD and beyond

- No funding to proceed on support R&D. Expertise, mandrels,…available
- Limited ability to consider system aspects of designs
- No ability to demonstrate low mass ladder/sensor concepts outside of PLUME work
- Not our worse concern as VTX can integrate fairly late.

Participating Institutions:
ANL, FNAL, Michigan, New Mexico, Oregon, SLAC, UC Davis, UCSC

Baseline: silicon tracking; no alternatives considered

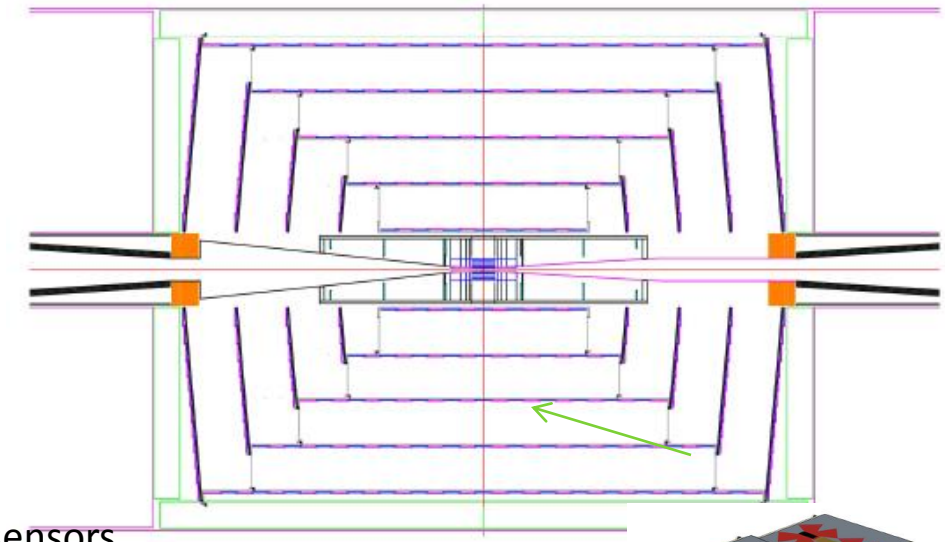

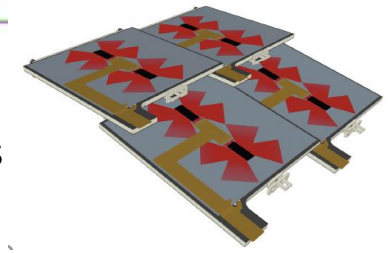

First priority R&D:

- Development of KPIX chips and associated sensors
- Studies of signal to noise and crosstalk
- Development of sensors, modules and overall support structures for the barrels and disks
- Studies of pulsed power, power delivery, and associated vibrations
- Studies of heat removal, particularly from the disks
- Studies of alignment precision and monitoring

Second priority R&D:

- Studies of alternative sensors and readout to provide z information
- Development of cabling
- Development of module fabrication techniques

Module

- All components in hand
  - 1024 channel KPiX chip
  - Sensor
  - Cable
- Had difficulties bump bonding of KPiX to sensors; IZM vendor appears to have solved problem

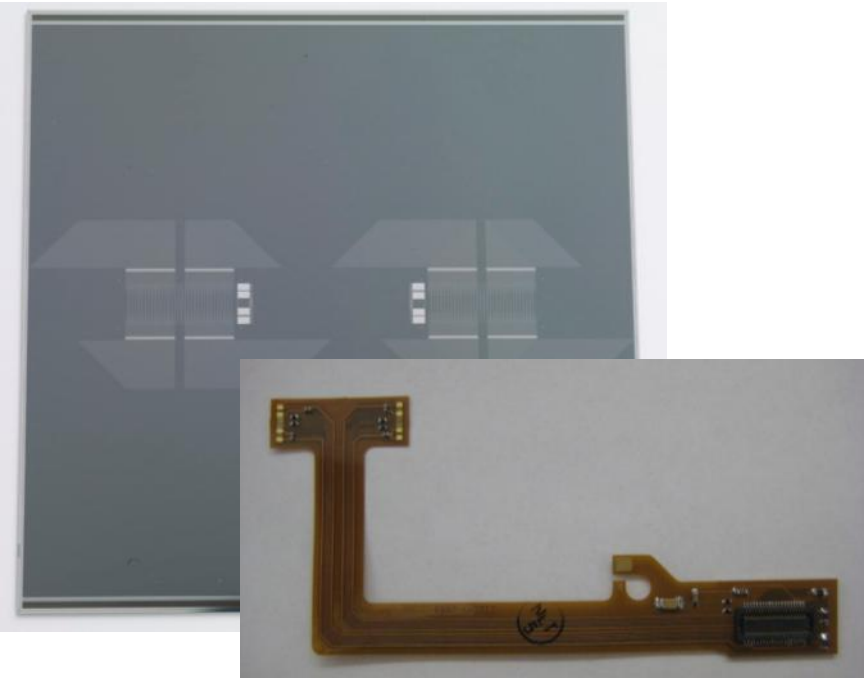

Software

- Optimized tracking algorithms for CLIC_SiD and studies at 3 TeV
  - Silicon tracking performs very well under severe conditions: Z' → qqbar @ 3 TeV

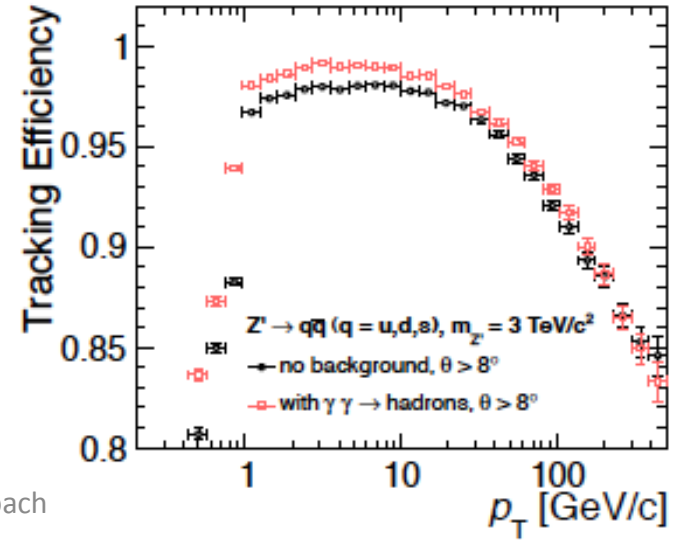

Modules:

- Complete full Si module: bonding KPiX (IZM yes), cable and readout
- Bench test (noise, crosstalk, …) and, if time permits, beam tests at SLAC in 2012.

Alignment:

- Resume laser scanned interferometry (U. Michigan/K. Riles) 2012-- no funds

Reconstruction:

- A robust system has been tested for CDR – fine for DBD
- $\Rightarrow$ Study tracking algorithms and optimize the layout and segmentation if effort available

Concerns:

- Personnel to construct/test Si module
- People to study pulse powering and associated vibration tests

DC Power Transmission for SiD:

- Want large conversion ratio to reduce Cu and thermal losses.
- Need to operate in high magnetic field: air core inductors
- Need to control V=LdI/dt resulting from power modulation
- Must not bother sub-fC signals to KPiX!

- Yale DC-DC conversion prototype has been tested with 512 channel KPiX and un-optimized cable.
    - Turn off spike small.
    - Noise increase small.
    - Needs some work, but appears will be satisfactory baseline.
- This approach is intended for the tracker and EMCal. Other systems not decided.

Two Stage DC-DC Power Conversion & Distribution

DC Input

48 V

Control Inputs

48 V in, 5 V out
DC- DC
PWM Controller
Odyssey Chip 5 mm Sq
~ 5 MHz Operation
Air Core Inductor

Yale Model 2154

GaN Switches for Higher Efficiency

Output Bus
5V @ 10A

5 V

Low mass Flex cables

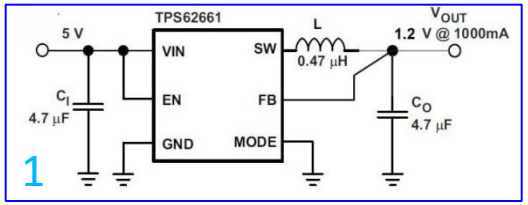

FE Chips

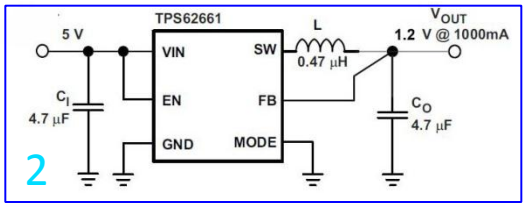

FE Chips

40 DC-DC Converters
Yale Model 2153

130 nm front end chips

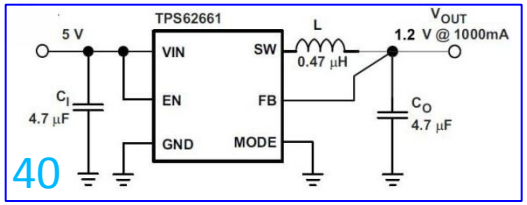

FE Chips

DC-DC

48V in – 5V @10 A out

Fewer of these modules
further from the detector/sensors

DC-DC

5V in – 1.2V @1 A out

Many of these modules
close to the detector/sensors
Low mass chip scale package
small Air Core Inductor.
Test 6, 9 and 20 MHz Converters

Status

Model 2153: Prototype for coil configurations under Test
Model 2153: Odyssey Chip Eval Board under NDA

Proposed Tests in 7T Magnet at Yale University for SiD

- KPiX chip with & without Pulse power. Needs DAQ & Software experts to run it.
- Current leads tests – vibration, movement, tilting.
- Two 7T, 16 cm warm bore magnets available at Yale.
- Needs people!

Bruker 7T, 20 cm bore

Test set up in 7 Tesla Magnet

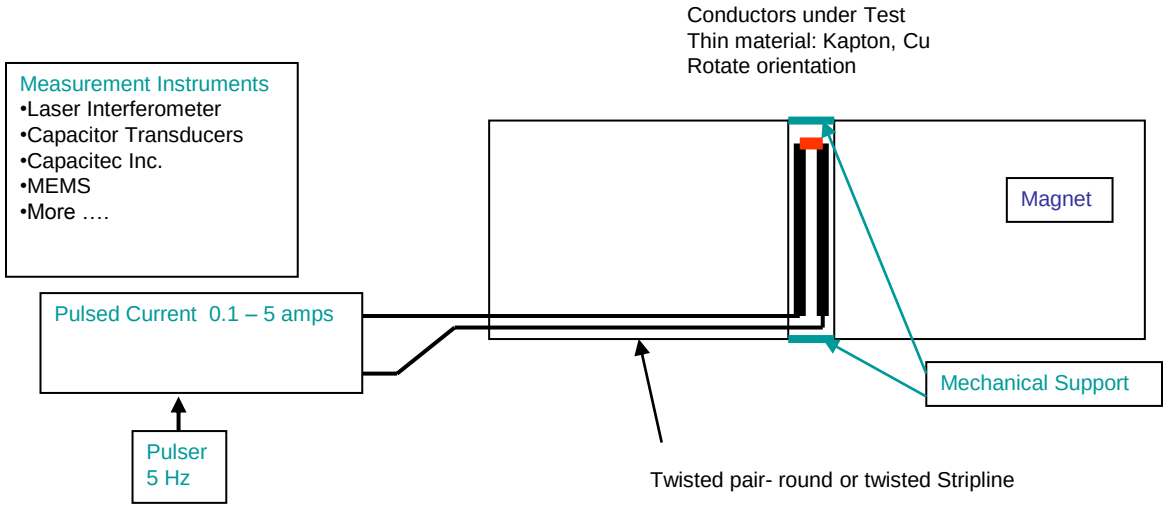

SLAC
UC Davis
University of Oregon
Brookhaven National Lab

Baseline: Silicon-tungsten (13 mm^2 pixels) with highly integrated readout (KPiX chip)

Option: MAPS – uses same tungsten and mechanical structure

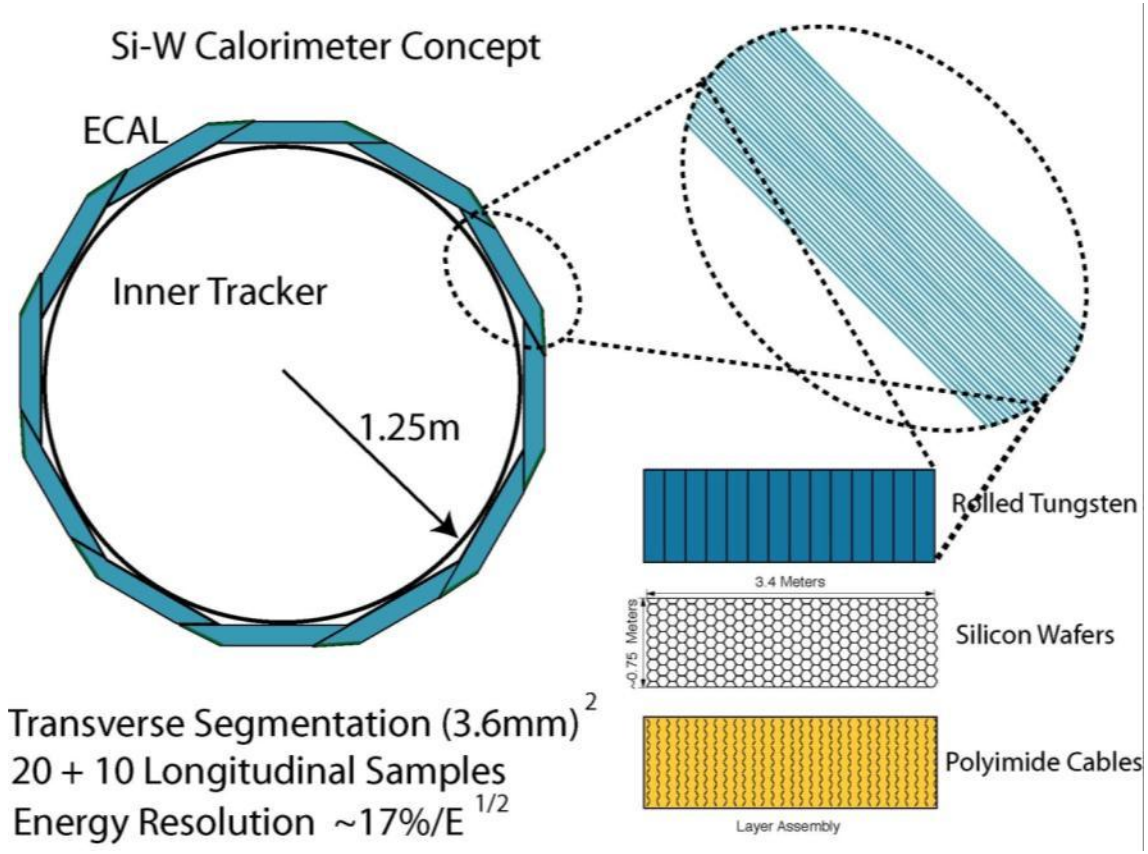

Critical R&D: Build test beam prototype module using components of final SiD ECal:

- 1024-channel integrated readout chip (KPiX)
- 1024-pixel silicon sensors
- interconnects

Silicon sensors: Meet specs. for SiD ECal
- Hamamatsu
- low leakage current; DC coupled
- sufficient number for prototype (30 layers)

Integrated readout chip (KPiX): prototypes meet SiD specs.:
- low noise (10% of MIP)
- large dynamic range: ~10^4
- full digitization and muliplexed output
- passive cooling (power pulsing)

Interconnects:
- Flex cable R&D ok so far – successful attachment to dummy sensors
- Main focus of recent R&D is the KPIX – sensor interconnects … recently successful!

Prototype module

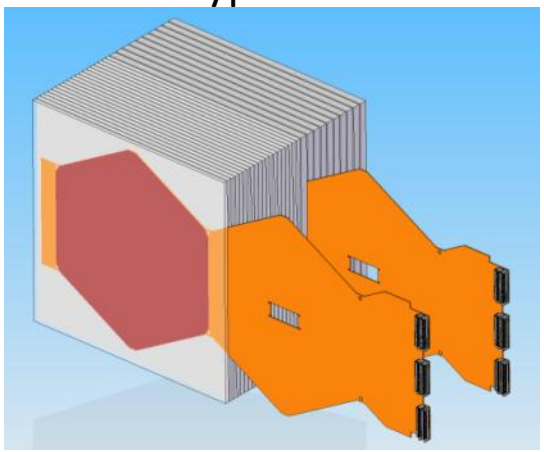

Development of ECal mechanics

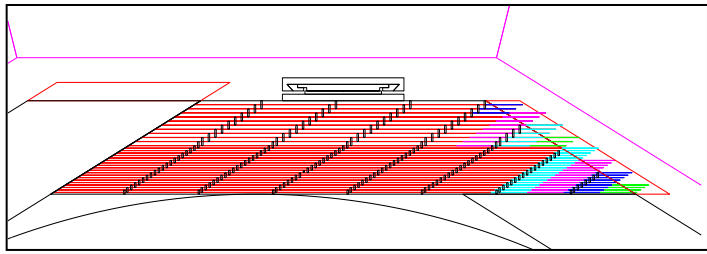

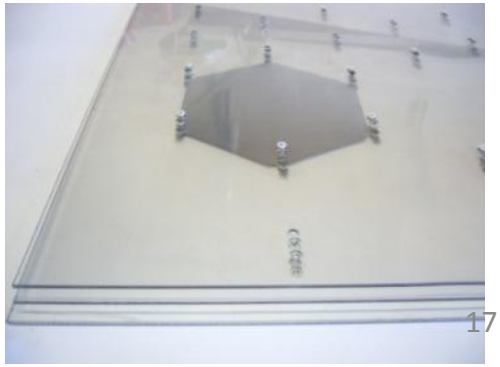

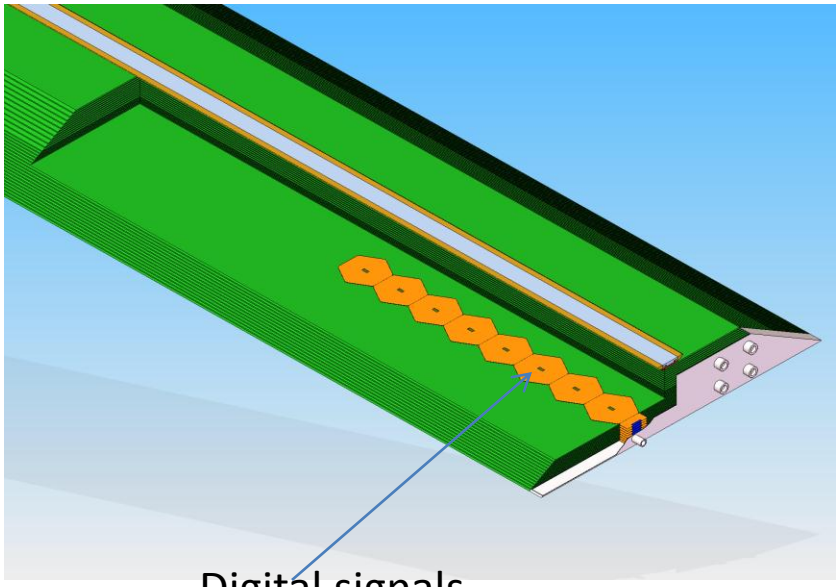

Digital signals
& power

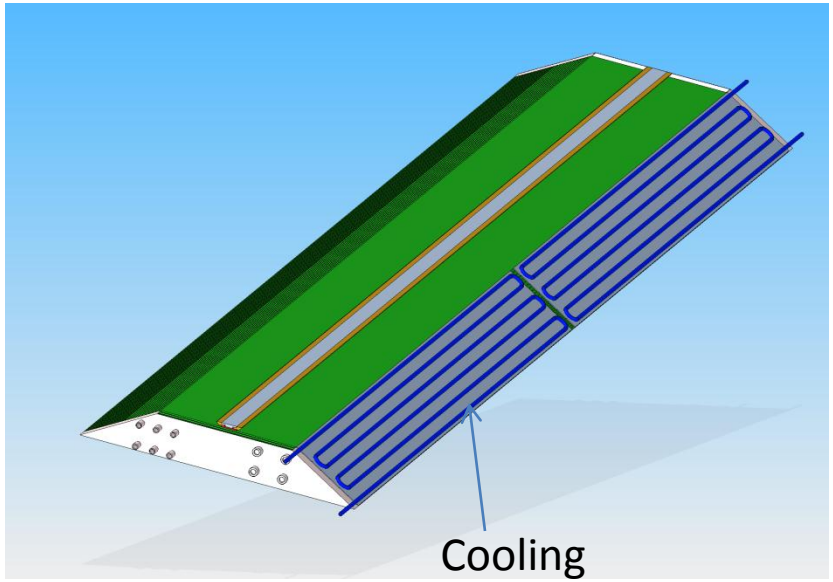

Cooling
(~20mW/KPiX)

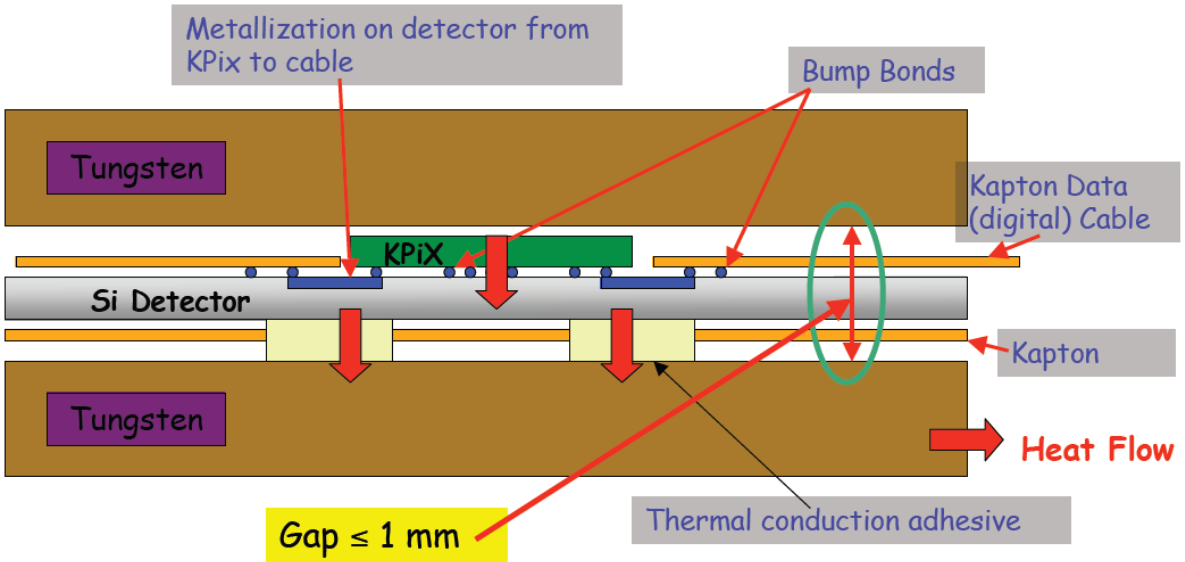

SiD EmCal Sensors

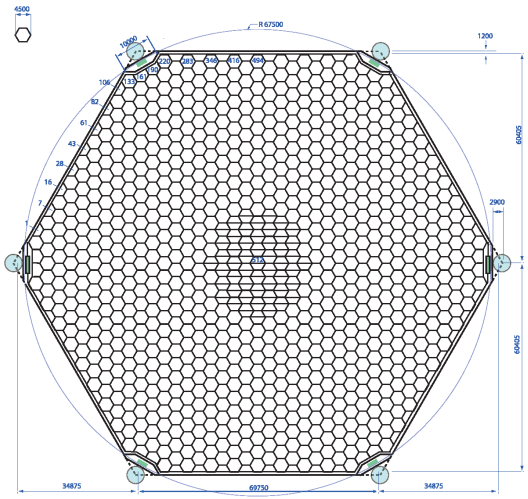

1024 Pixel Si Sensor
12 cm across flats

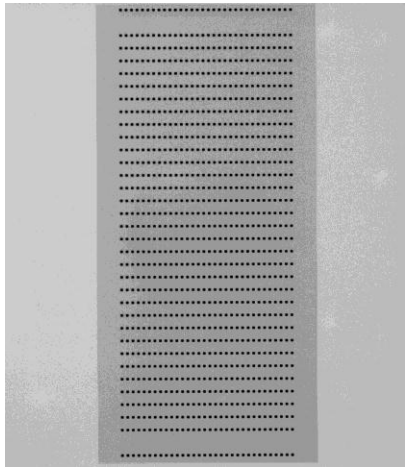

X-ray of Kpix bumps to sensor

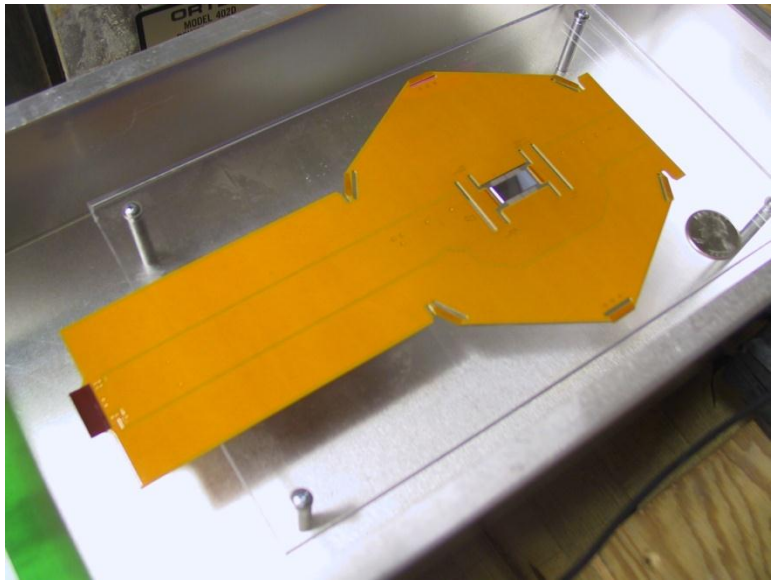

KPiX bump bonded to sensor
Cable bump bonded to sensor
Assembly 1 mm high

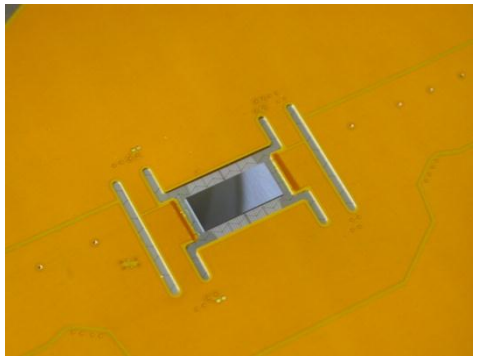

Plan:

Contract IZM to bump bond 30-40 sensors i.e. KPiX

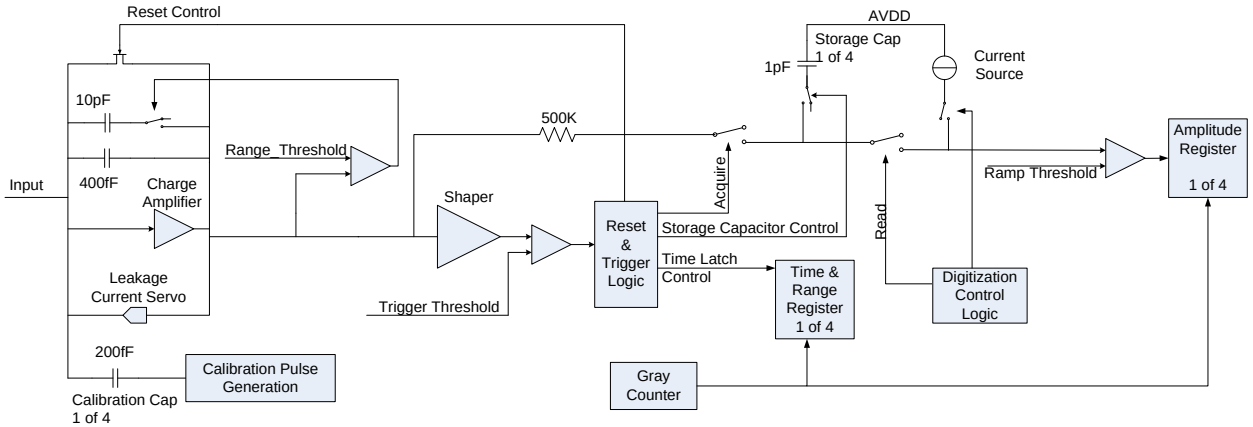

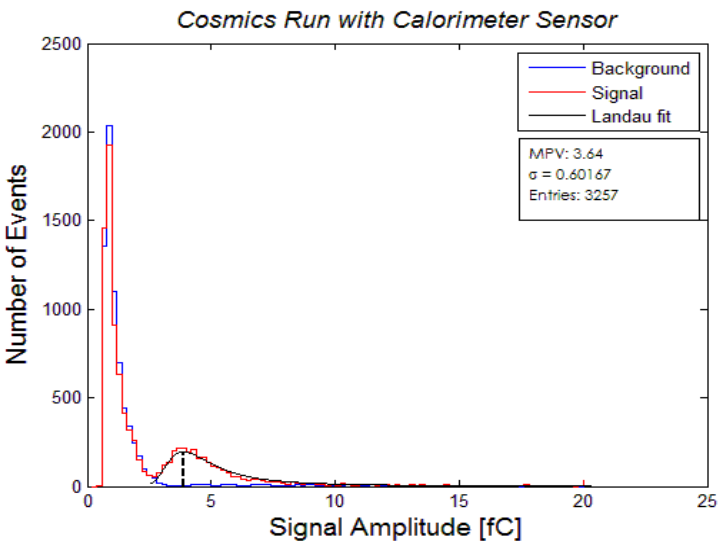

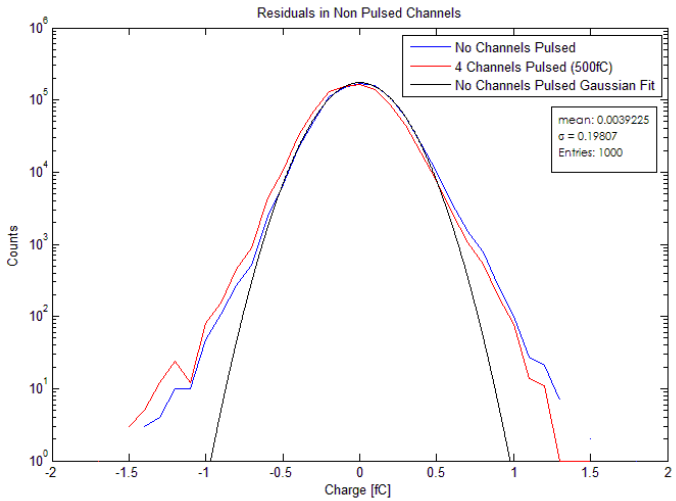

Cross talk Study: Red: 4 pixels pulsed at 500 fC,
All other channels shown. Blue: no pixels pulsed.

Timeline for R&D

- Complete contract & bump 30-40 sensors to KPiX
- Assemble test module
- Secondary End Station test beam at SLAC, which is now scheduled to be ready for use in late 2012

Results expected for inclusion in DBD

- Technical results on components – updates to LOI
- Successful assembly of fully functional prototype will demonstrate feasibility of the design
- First test beam results, if available in time

Issues/concerns for DBD and beyond

- Personnel also engaged in other experiments
- The MAPS option (UK based) needs resources to continue

Argonne National Laboratory
Boston University
Fermi National Accelerator Laboratory
IHEP Beijing
University of Iowa
McGill University
Northwestern University
University of Texas at Arlington
NIU
SLAC

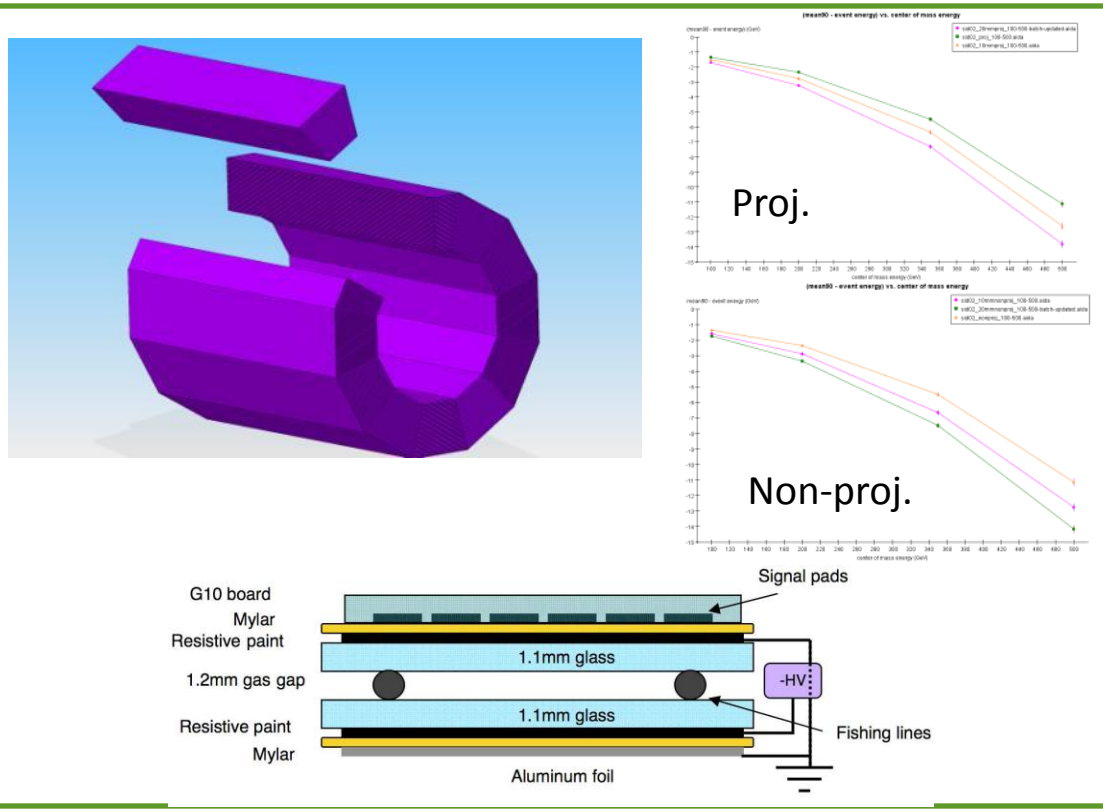

Baseline – 4.5 λ RPC/Steel

Option 1 – GEM/ Micromegas/Steel
Option 2 – Scint/Steel

Areas of critical R&D/goals - baseline

Large area glass chambers
Module design (projective/non-projective)
Gas (re-)circulation/routing
Improved readout boards
HV/LV distribution
Data transmission

R&D and results to date

Readout – DCAL chip

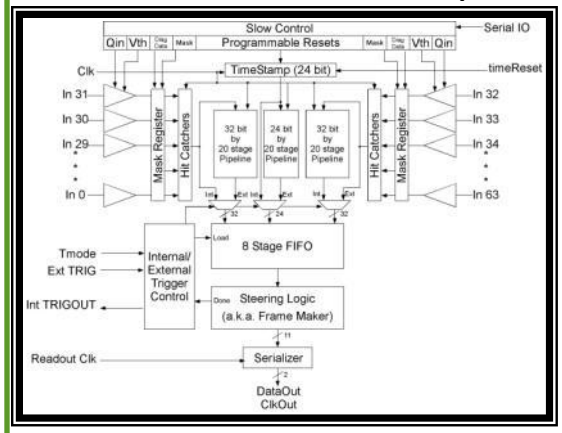

Front-end board

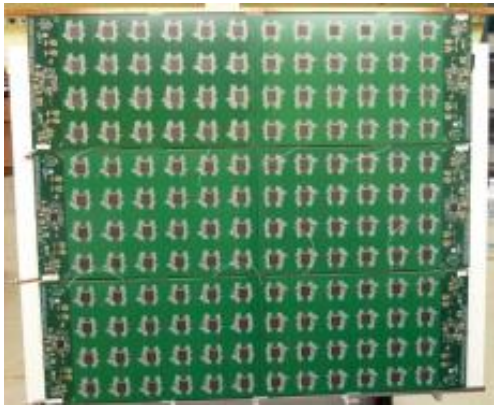

DHCAL:
480,000 readout channels

Had 4 test beam runs so far

- 10/2010: 38 layers
- 2/2011: completed 38 + 14 during run
- 4/2011: SiW ECAL + RPC DHCAL
- 6/2011: RPC DHCAL alone
- More test beam in 2011 - 2013

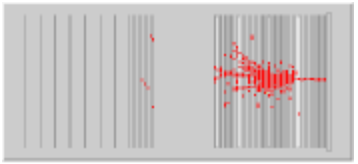

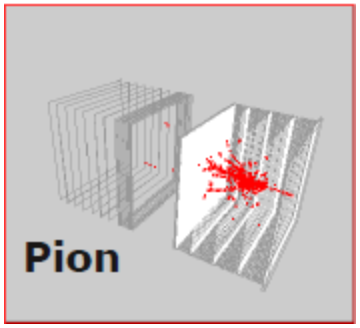

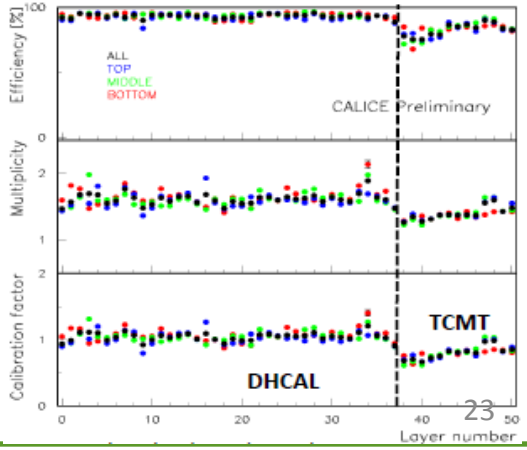

Selection of nice events from the test beam

Muon in the minimal absorber structure

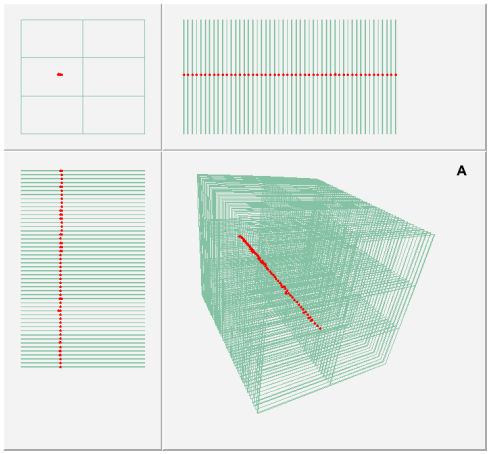

8 GeV e^+ in the DHCAL

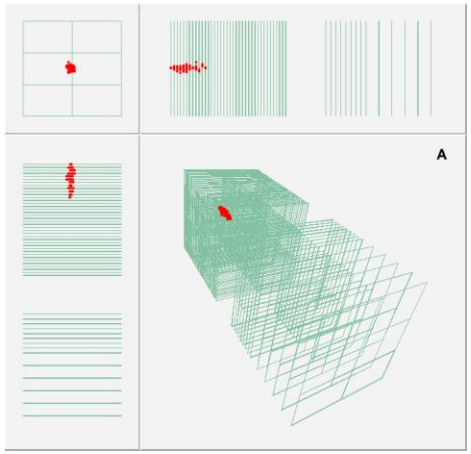

8 GeV/c π^+ in the DHCAL and TCMT

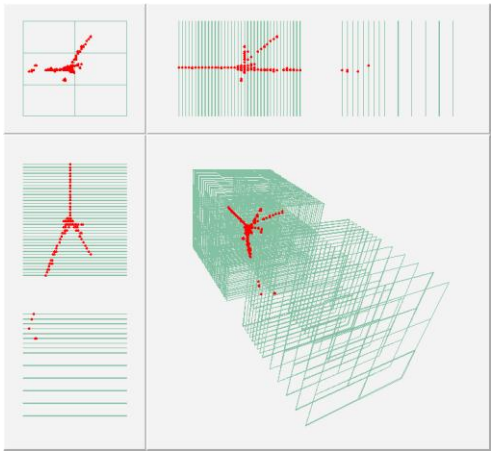

120 GeV/c p in the DHCAL and TCMT

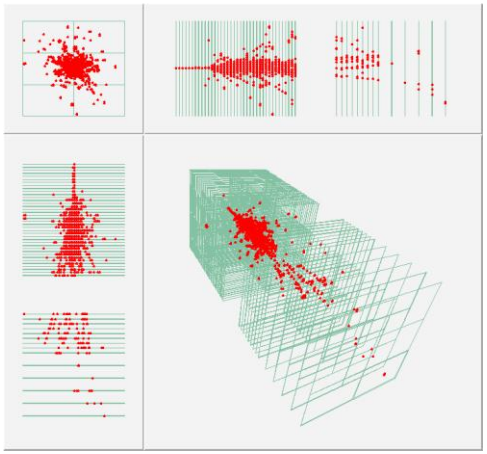

10 GeV e^+ in the minimal absorber structure

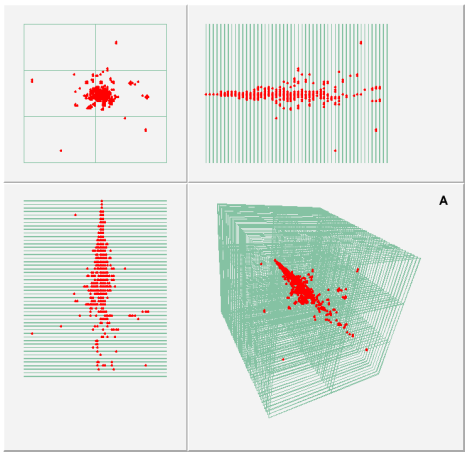

10 GeV π^+ in the minimal absorber structure

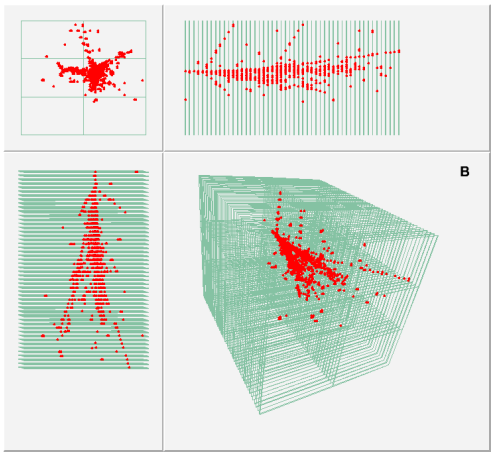

Timeline for R&D

- Completed prototype construction by Dec 2010
- Beam test at FNAL all of 2011 (Tertiary beamline, DHCAL without absorber)
- Beam test at CERN starting now (DHCAL with Tungsten absorber)
- R&D on HV distribution system, high-rate RPCs, 1-glass RPCs, gas recirculation… ongoing

Results expected for inclusion in DBD

- Description of DHCAL/RPCs/Readout system (instrumentation paper)
- Detailed measurement of noise in the DHCAL (noise paper)
- Calibration of the DHCAL with Muons
- DHCAL response to positrons and pions
- Measurements with large 1-glass RPCs (viability of design)
- Conceptual engineering design (if resources permit)
- Test with W absorber -- starting at CERN testbeam

DHCAL concept will be validated

Issues/concerns for DBD and beyond

- Conceptual engineered design
- Analysis of DHCAL data incomplete
- Viability of gas recirculation still unproven

Fermilab Test beam + Inst
INFN Udine APDs
Notre Dame Scint /WLS
Wisconsin/SLAC

Baseline:
Strip-scintillator/WLS fiber & Avalanche Photo-Diodes (APDs)

Option :
Resistive Plate Chambers (double layers)

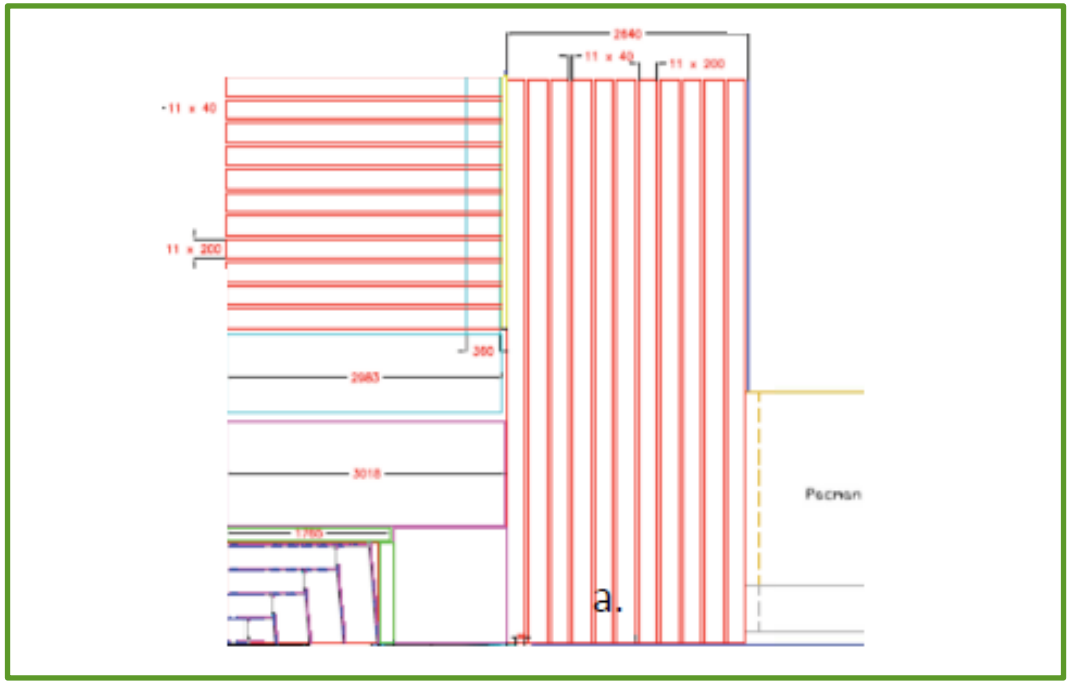

Areas of critical R&D/goals

Scintillator - Need to build and test strips with robust techniques.

RPC – need to complete aging studies
- test new HF resistant RPC's
- develop large area chamber design

Changed baseline

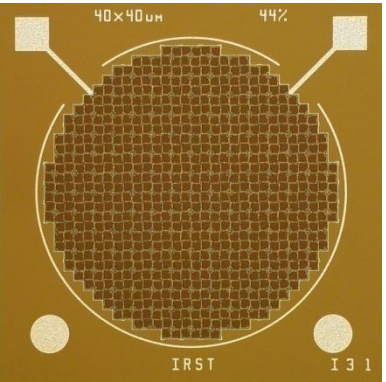

APD's
1.2 mm ϕ
660 pix
$40\mu^2$

Prototype construction

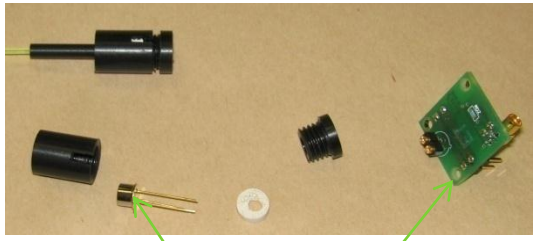

SiAPD Pre-amp

Test Setup

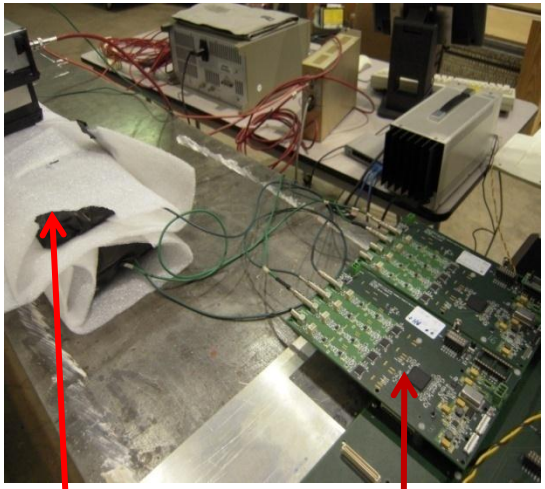

Strip-Scint.

TB4 Boards: 8 channels

180 digitizations * 4.708ns = 847ns

212 MHz

Results: FTBF beam

Calibration w/Noise

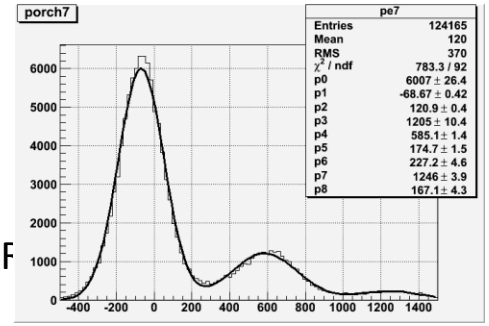

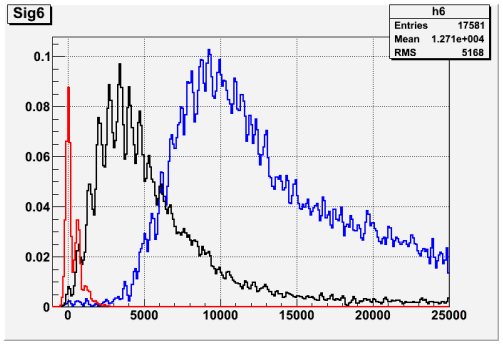

Timeline for R&D:

RPC: Explore production of new resin-based RPC with Chinese company
Scintillator: New design of mechanical /optical coupling scheme using tooling: Try with short strips. All in 2012,
-Set-up tests with 4 strips and new optical/mechanical coupling. June 2012

Results expected for inclusion in DBD:

- **Scintillator**: First results from cosmic ray tests of new coupling scheme.
- Write a paper if there is sufficient data.
- **General**: Conceptual design of barrel and endcaps

Issues/concerns for DBD and beyond

- Limited resources in U.S.

Participating Institutions
SLAC (Wes Craddock)
FNAL
BNL
LLNL
(CERN & KEK informal)

Baseline
Modified CMS Conductor

Option 1
Al-0.1% Ni (ATLAS)
Stabilizer

Option 2
Advanced Next Generation
Stabilizer

Note: The only significant option choices based on technological advancements are with the conductor.

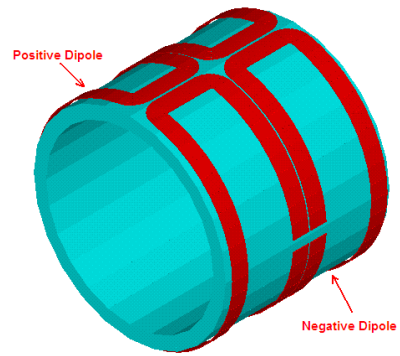

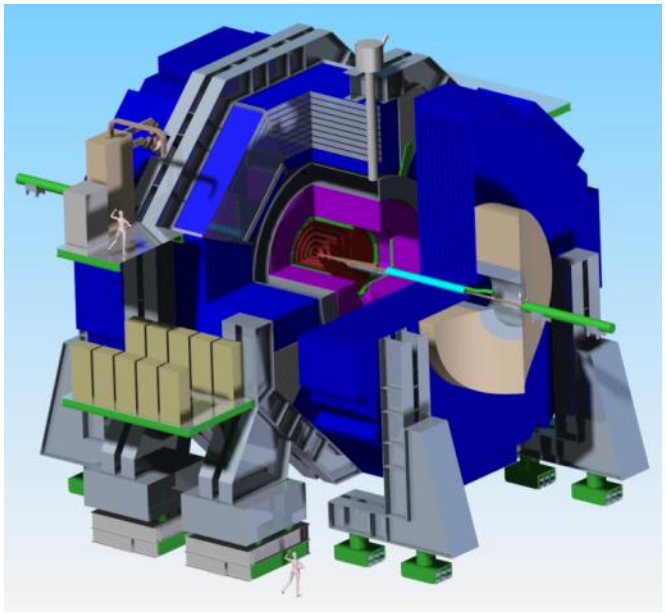

Areas of Critical R&D / Goals

1. 3 D Magnet Field FEM Analysis
2. Integration of DID Coil into Cryostat
3. Assembly and Installation Procedures
4. Structural and Thermal Design (real world)
5. Cryogenic Systems Integration with QD0

Really global effort

Results to date

Magnetic Field Calculations

1) 2D to minimize stray fields – Sufficient for DBD
2) Iron Barrel HCAL option – Completed: Complexity not worth improved uniformity
3) 3D (with DID): ANSYS modeling at least ½ completed. Need to solve and study.
4) BNL Opera 3D simplified solenoid/DID analysis. Need ANSYS/Opera comparison

Structural and Thermal Design

1) Vacuum shell analysis completed. Need attachment integration with Fe and detector.
2) Need coil support, thermal shield and current lead design.
3) Practical but not detailed DID winding and solenoid attachment schemes.

Conductor: CMS conductor with 40 strand Rutherford cable. Need DID conductor.
Electrical: Sufficient for DBD except for DID coil and instrumentation list.
Cryogenics: Detector layout completed but needs integration with QDO
Conductor R&D: Identified many potential paths for higher strength high conductivity aluminum such as carbon nanotubes reinforcement and scandium.

Timeline for Design and Development

3 D Fields and Force	Dec. 2011
DID Design and Integration	March. 2012
Detector / Iron Design Integration	March 2012
Assembly Procedure	April 2012
Mechanical and Cryogenic Details	July 2012
Thermal Analysis	August 2012

Results expected for inclusion in DBD

- 3 D Magnetic Field, Force & Stress including DID Coil and Vacuum Shell
- Structural and Thermal Design including Integration with Iron and Detector
- Assembly and Construction Procedure
- Size and Tolerances for Major Components
- Cryogenic Scheme integrated with QD0
- Power Supply/Dump Circuit/Grounding/Instrumentation

Issues/concerns for DBD and beyond

- The main concern is SLAC manpower committed to other projects.
- Potential cost savings exist using advanced high purity Al stabilizers and conductor fabrication techniques. There will be negligible time to pursue this before the DBD.

UC Santa Cruz (SCIPP), Pontificia Universidad Catslica de Chile, U. of Colorado, SLAC

Baseline:
Silicon-Tungsten sampling calorimeter

SiD Forward Region

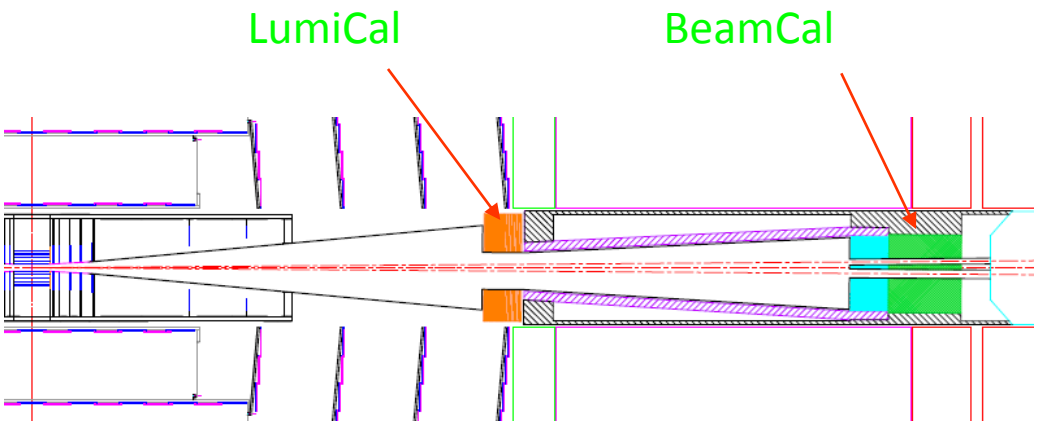

Areas of critical R&D/goals

Radiation hard Silicon sensor R&D
FCAL chip development
Simulation study of BeamCal tagging

FCAL collaboration

Radiation hard sensor R&D (SCIPP/SLAC)

- Micron sensors from ATLAS R&D
- Runs of up to 100 Mrad (Spring 2012)
- Will assess the bulk damage effects and charge collection efficiency degradation.
- Charge collection apparatus being upgraded at SCIPP to process many samples quickly.

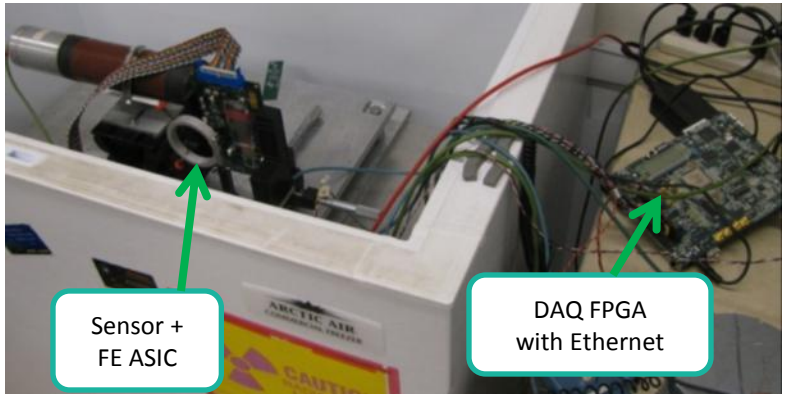

FCAL chip development (Santiago/SCIPP)

- 180 nm TSMC process
- 72 pads, 2.4 mm × 2.4 mm
- 7306 nodes, 35789 circuit elements
- 3 channels
- No digital memory

  Second prototype started

Bean v1.0 prototype

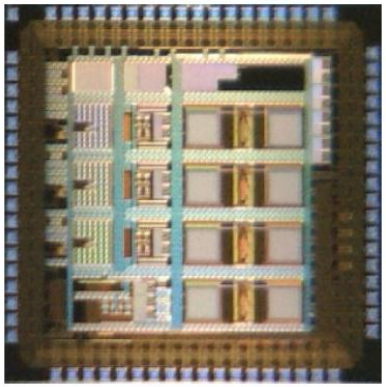

Study of stau production (Colorado)

- Stau production in co-annihilation points: M. Battaglia et al hep-ph/0306219 $\sigma \sim 10$ fb
- Background

  $\gamma\gamma \rightarrow \tau\tau$, $\sigma \sim 10^6$ fb

  BeamCal veto is essential.

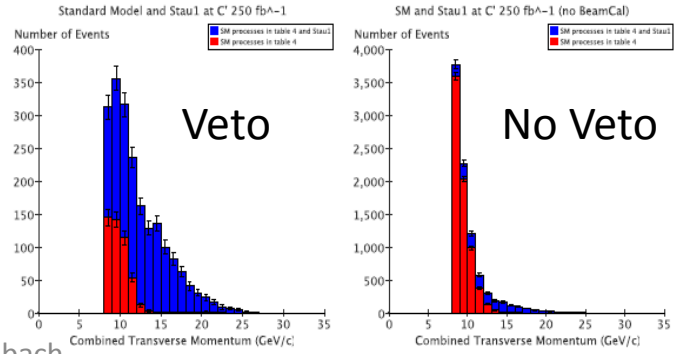

Timeline for R&D

- Summer 2012: Initial (100 MRad) study completed
- Summer 2012: Submission of second BEAN prototype
- BeamCal simulation study has been completed.

Results expected for inclusion in DBD

- 100 MRad study with Czochralski/FloatZone n-on-p/p-on-n sensors
- Submission of second prototype BEAN readout chip
- BeamCal simulation study.

Issues/concerns for DBD and beyond

- Availability of SLAC 13.6 GeV test beam
- Chilean support for BEAN chip development (and continue US support for digital components)

SLAC: slic org.lcsim

Baseline:
sid_dbd : LOI geometry with more realistic detector descriptions.
Option 1:
sid_dbdopt: Detector optimized for 1TeV operations.
Option 2
sid_dbdspt: Silicon Pixel Tracker option.
Option 3
sid_dbdsci: Analog scintillator HCal

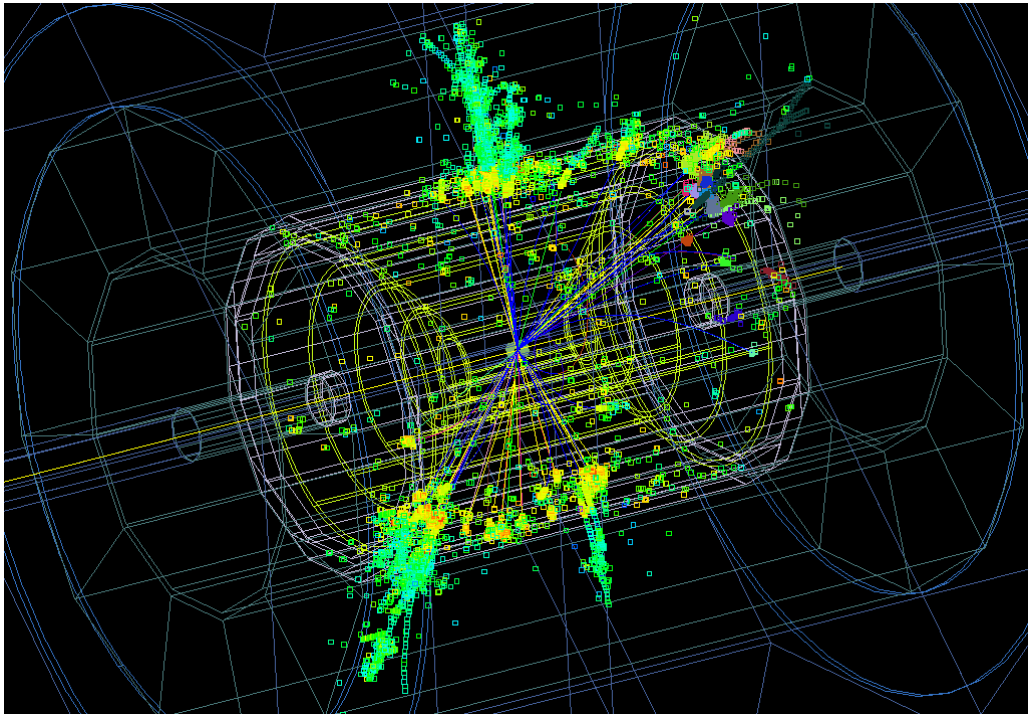

Areas of critical R&D/goals

Finalize global system design via detector performance optimization using physics analyses.
Incorporate latest detector R&D results
Improve tracking and PFA reconstruction
Automate & streamline production sim/reco

R&D and results to date

CLiC CDR provided stress test of the DBD simulation, reconstruction and analysis exercise.

Required improvements to the functionality such as event overlay, track-finding in dense environments and use of PandoraPFA.

DBD will benefit from these improvements.

Most significant difference wrt LOI will be the use of Grid resources (CPU & SE). Dirac tried and proved in CLiC CDR. Will coordinate with ILD on common solution.

Expect event overlay to be incorporated into the reconstruction.

Effect of detector noise and electronic inefficiency will be studied

Full detector response simulation will use slic, plus detailed SiD design.

Reconstruction will use detailed silicon strip and pixel response, RPC response, plus track finding and fitting using org.lcsim.

slicPandora and LCFI for individual particle reconstruction and jet flavor tagging.

Timeline

- Learn from and preserve functionality developed for CLiC CDR
- Adapt tracking code to LCIO2.0 event data model
- Implement Kalman fitting for final track states
- Develop full digital HCal response simulation
- Upgrade to latest PandoraPFA & LCFIPlus

Results expected for inclusion in DBD

- Full simulation of realistic detector design including support structures
- Full tracker hit digitization and ab initio track finding and fitting.
- Digital RPC signal simulation, including cross-talk , noise & inefficiencies
- Full reconstruction using slicPandora & LCFIVertex (LCFIPlus if available)

Issues/concerns for DBD and beyond

- Loss of key individuals in reconstruction efforts.
- Lack of manpower to conduct detector optimization studies.
- Aging software infrastructure.
- Delay in generating physics benchmark input events.

Timeline for R&D

- Still working on Iowa PFA.
- will benefit from further tuning, automation (~ 1 year)
- Bigger scope for use with other detectors as a general PFA
- Important to have independent PFA (comparisons with Pandora)

Results expected for inclusion in DBD

- Satisfactory resolution for 500 GeV and 1 TeV

Issues/concerns for DBD and beyond

- Lack of funding for continuation with so much already achieved
- Many future and current detectors could profit as a generic tool applicable

SiD DBD Benchmarking Status

DBD Benchmark Event Generation (ILC Common Generation)

- 2-4-6-8 fermion SM Background: MC event generation is complete. ee→2f and ee→4f were generated at DESY; ee→6f, high pT $\gamma\gamma$→2f, $\gamma\gamma$→4f, eγ→e+2f, eγ→e+4f were generated at SLAC; ee→ttbb & ttZ 8f backgrounds were generated at KEK.

- low pT, high cross section $\gamma\gamma$→hadrons have been generated at SLAC

- $\gamma\gamma$ mini-jet events (high pT subprocesses involving quark&gluon constituents of photons) have been generated at SLAC for the DBD -- they slipped through the cracks in the LOI generation.

- $\nu\nu$H and ttH signals: DBD generation was completed at SLAC and KEK, respectively. The WW signal was generated when the ee→4f background was generated at DESY; alternate initial state polarizations and anomalous TGC's will be simulated through reweighting.

- All MC event generation stdhep files are stored on the grid with an ftp accessible copy on SLAC NFS.

Participating Institutions

SLAC
Fermilab
BNL
Oxford U.
U. Of Michigan
ILC CFS
ILC MDI CTG

Push-Pull Baseline : Platform on rollers with gripper jacks

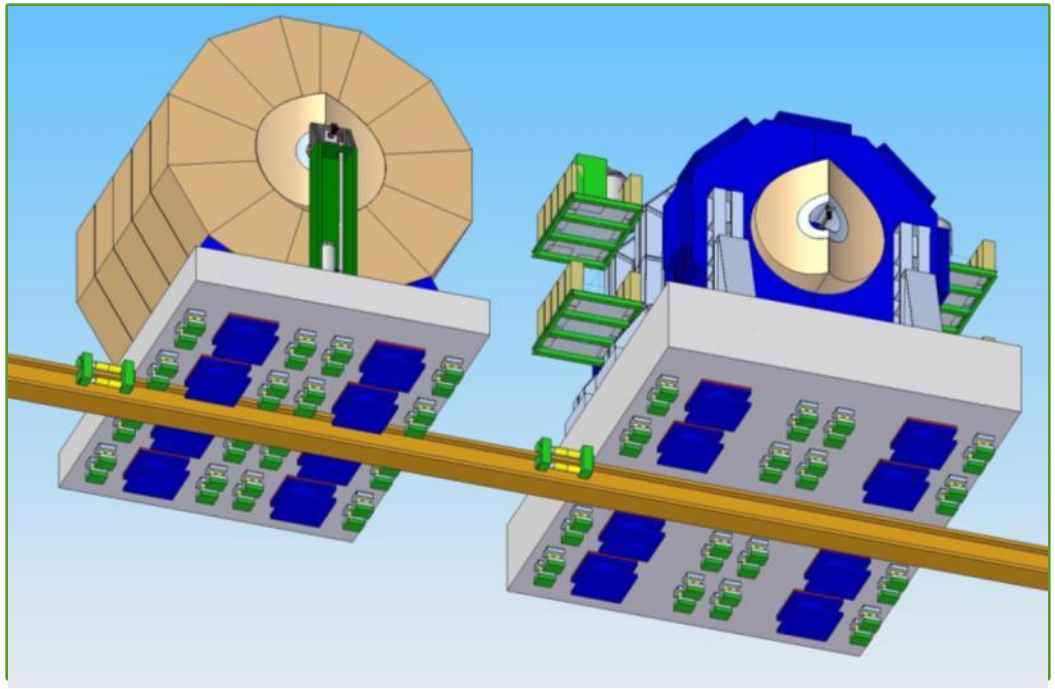

Areas of critical R&D/goals

1. Motion System for Push-Pull
2. Platform & QD0/FCAL Alignment
3. QD0 Adjustment System
4. Intra-train Fast Feedback System
5. Beam Pipe Design & vacuum
6. IR Hall Design
7. QD0 Prototype

Timeline for R&D

	Design - R&D	Options Review	Final Design
Motion System for Push-Pull	Jan.2011	Apr. 2012	Sept.2012
Platform @ QD0/FCAL Alignment	Jan.2011	Apr. 2012	Sept.2012
QD0 Adjustement	Dec.2011	Apr. 2012	Sept.2012
Intratrain Fast feedback System	Jan.2011	Mar. 2012	Mar.2012
Beam Pipe & Forward Cal	Dec.2011	Mar 2012	Jun.2012
IR Hall Design	Jan.2011	Apr. 2012	July.2012
QD0 Prototype	Dec.2011	Apr. 2012	Nov.2012

Results expected for inclusion in DBD

- Motion System for Push-Pull
- IR Hall Design
- Beam Pipe & Forward Cal
- Results from QD0 Prototype
- Performance of FONT prototypes of Intra-train Feedback System at ATF2

Issues/concerns for DBD and beyond

- Timeline for QD0 Prototype Completion very tight given scope of work
- Keep or increase Manpower available after DBD
- M&S for prototype construction

Two distinct access approaches:

- Vertical shafts (Europe, Americas)
- Horizontal shafts (Japan)

1. The assembly procedure will be different for the two sites
2. Both layouts must satisfy push-pull requirements
3. The detector hall must be optimized for costs: benefits vs. features

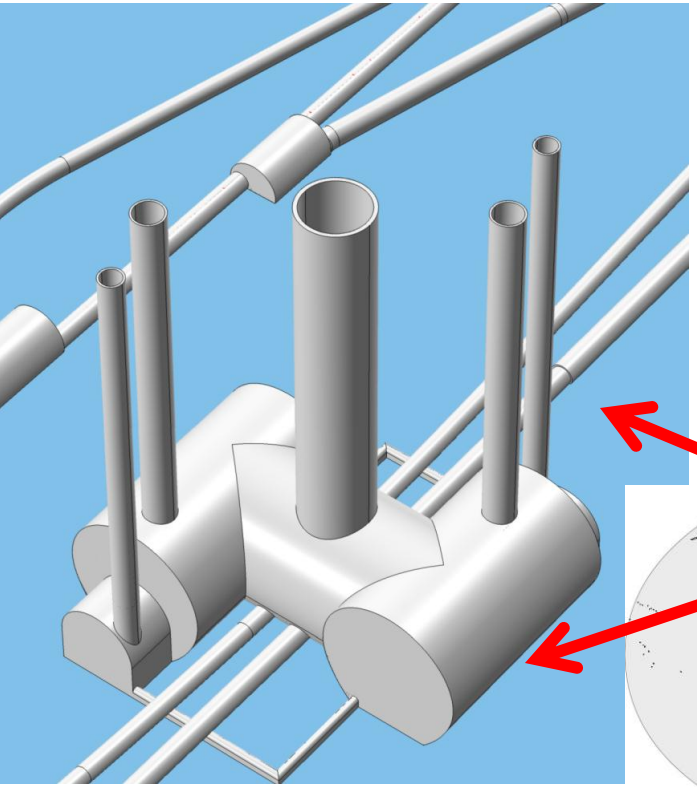

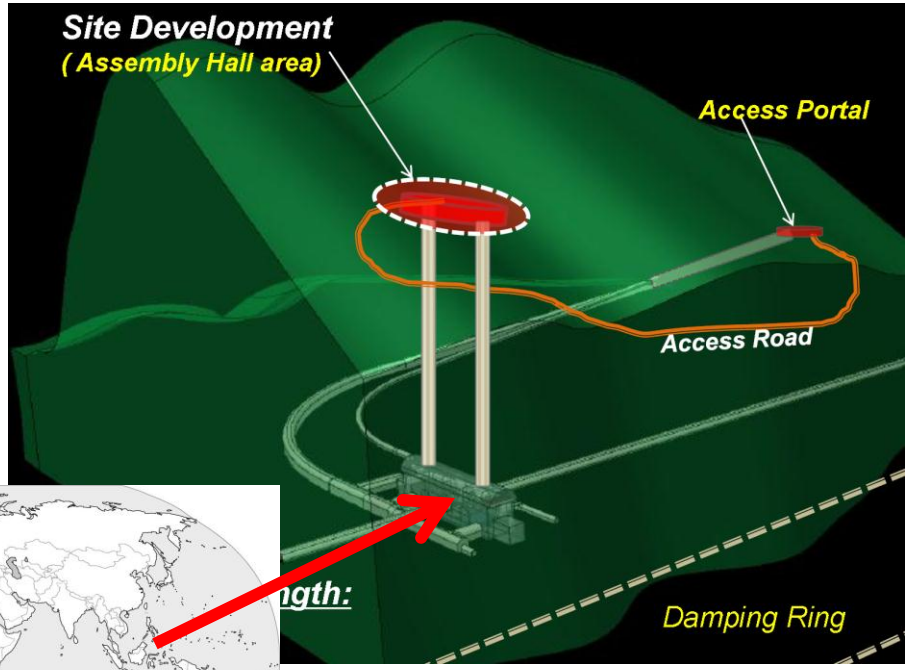

ILC IR layout (LCWS11,Granada)

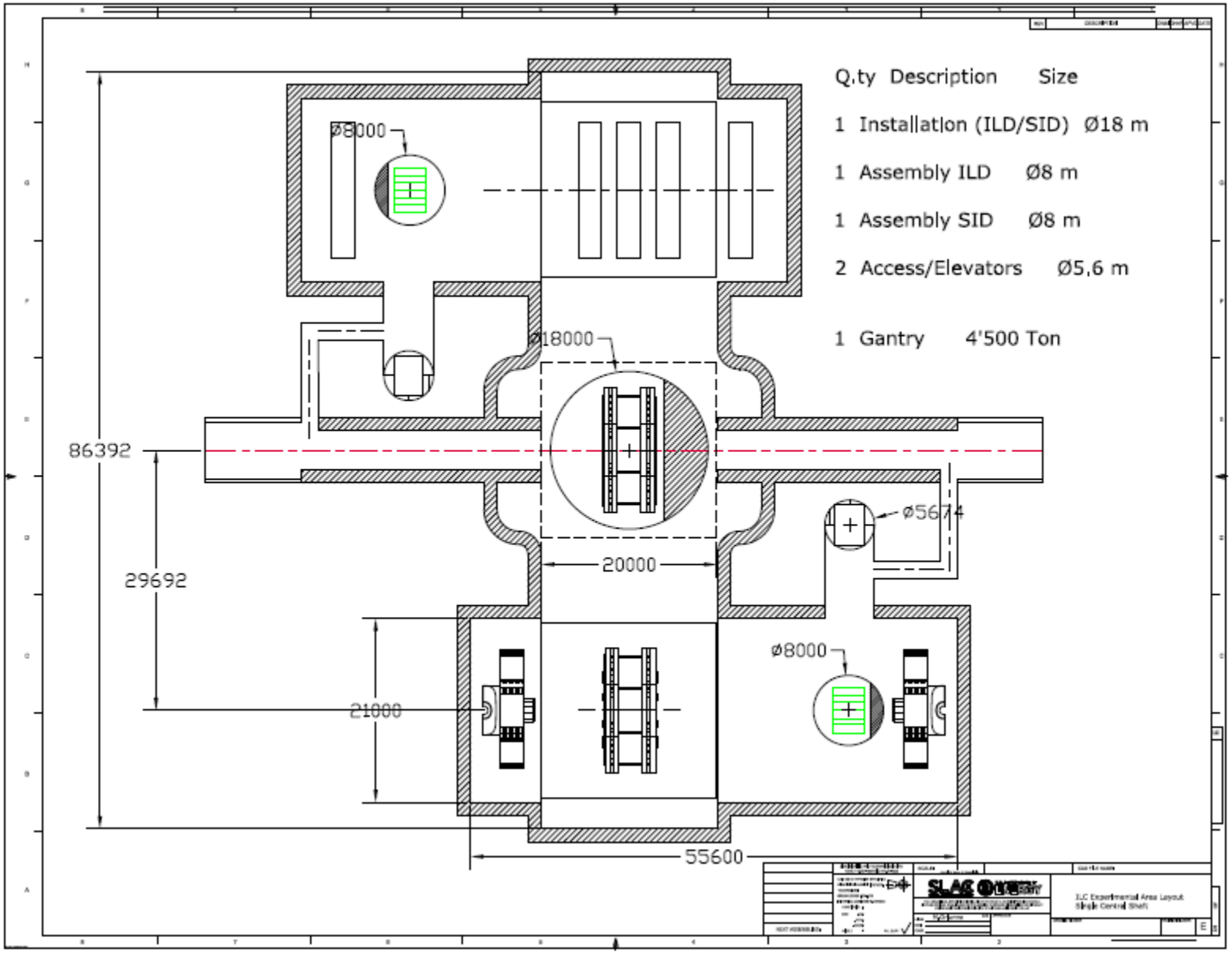

Surface assembly

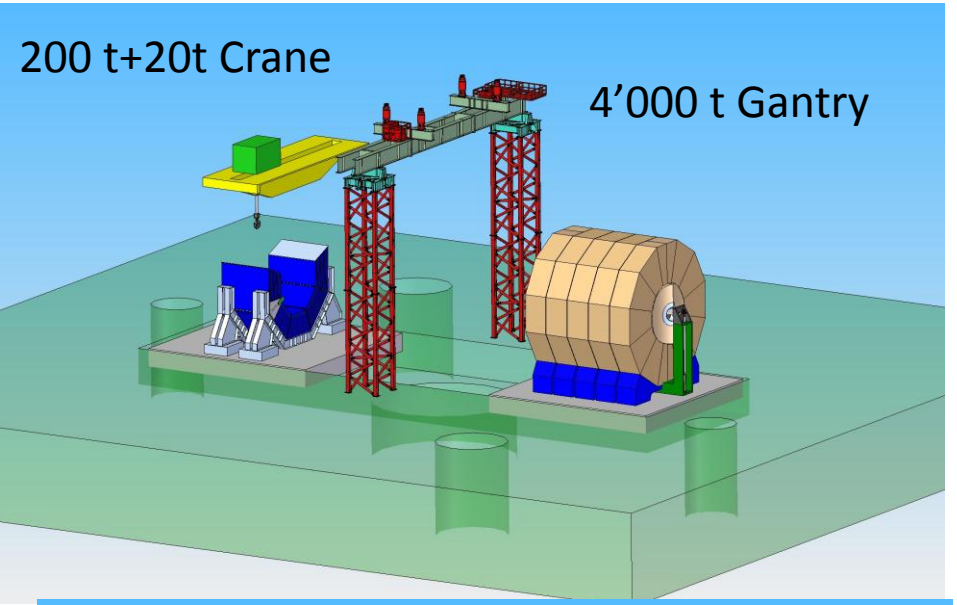

1. Assembly of Iron Doors+Barrel on surface
2. Commissioning of the magnet on surface
3. Large capacity gantry

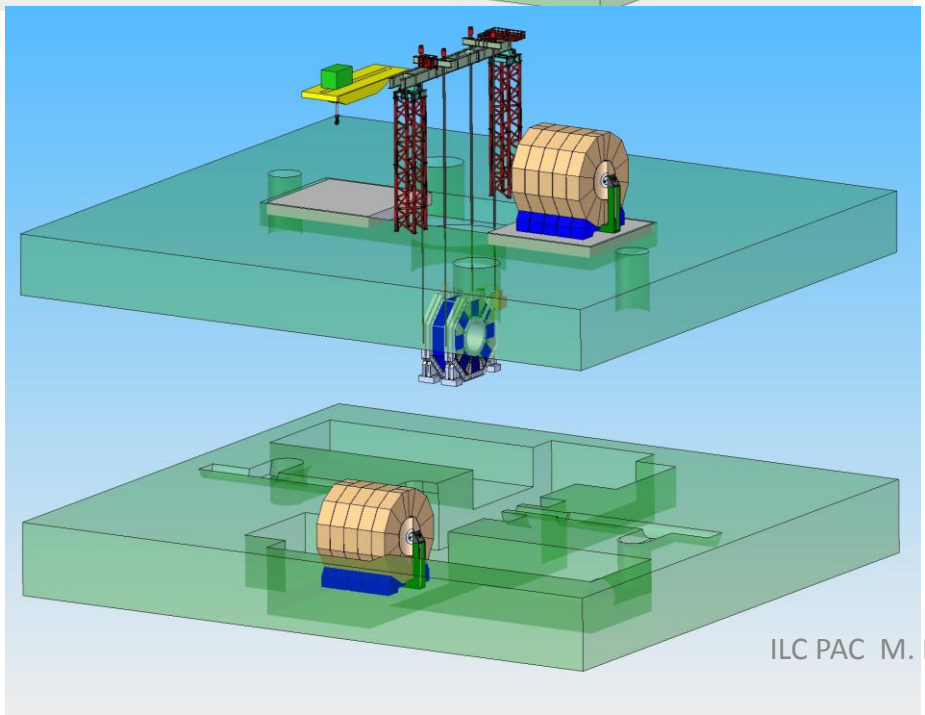

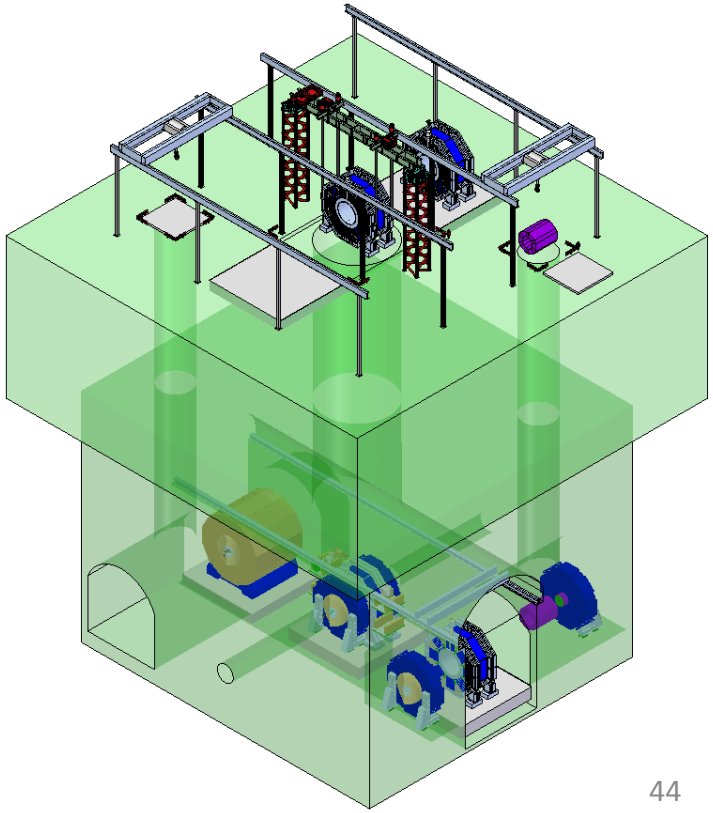

Detector Hall, Japanese Mountain Site

SLAC, Dec.2011

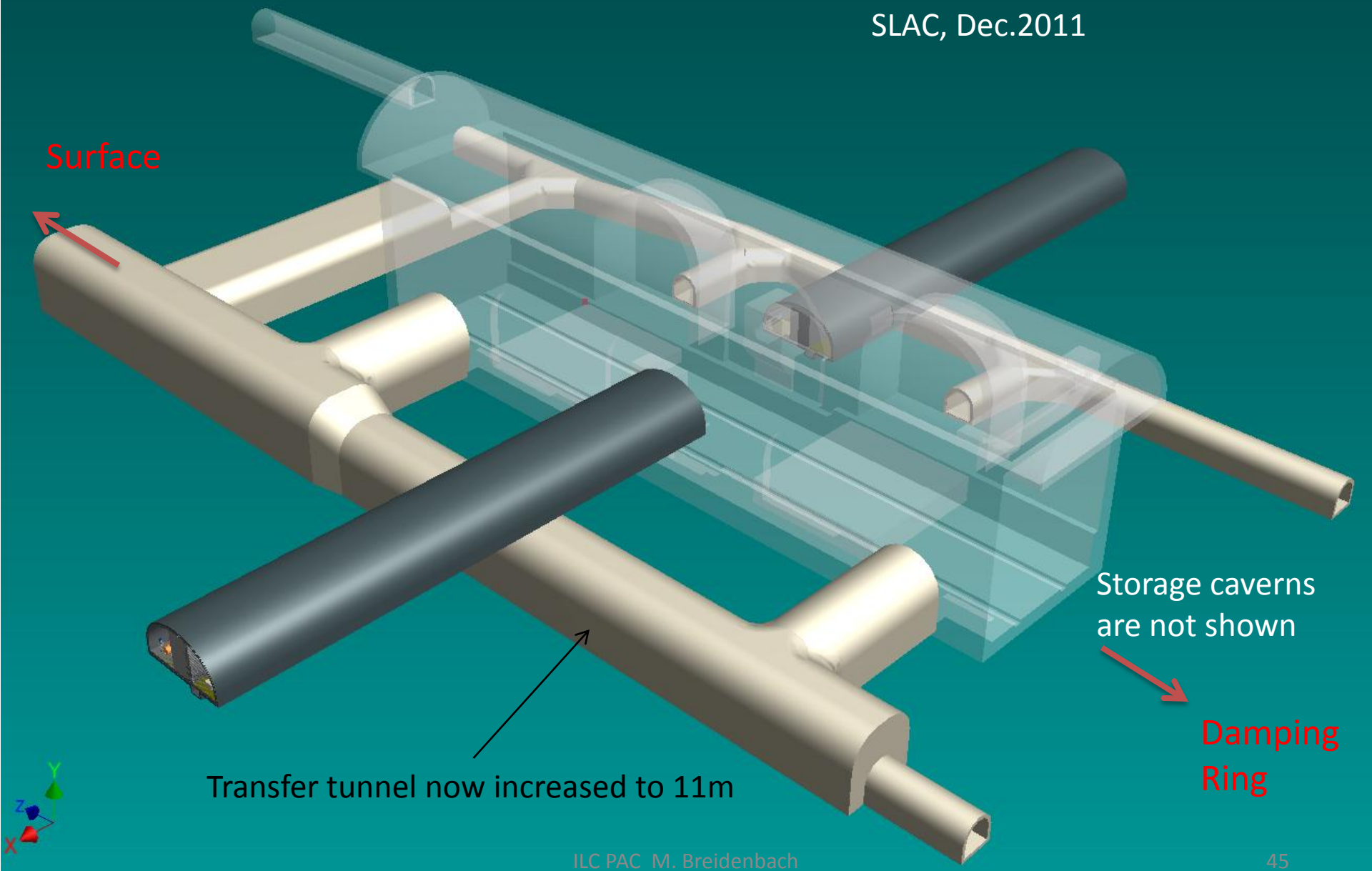

Current Layout, Apr.2012

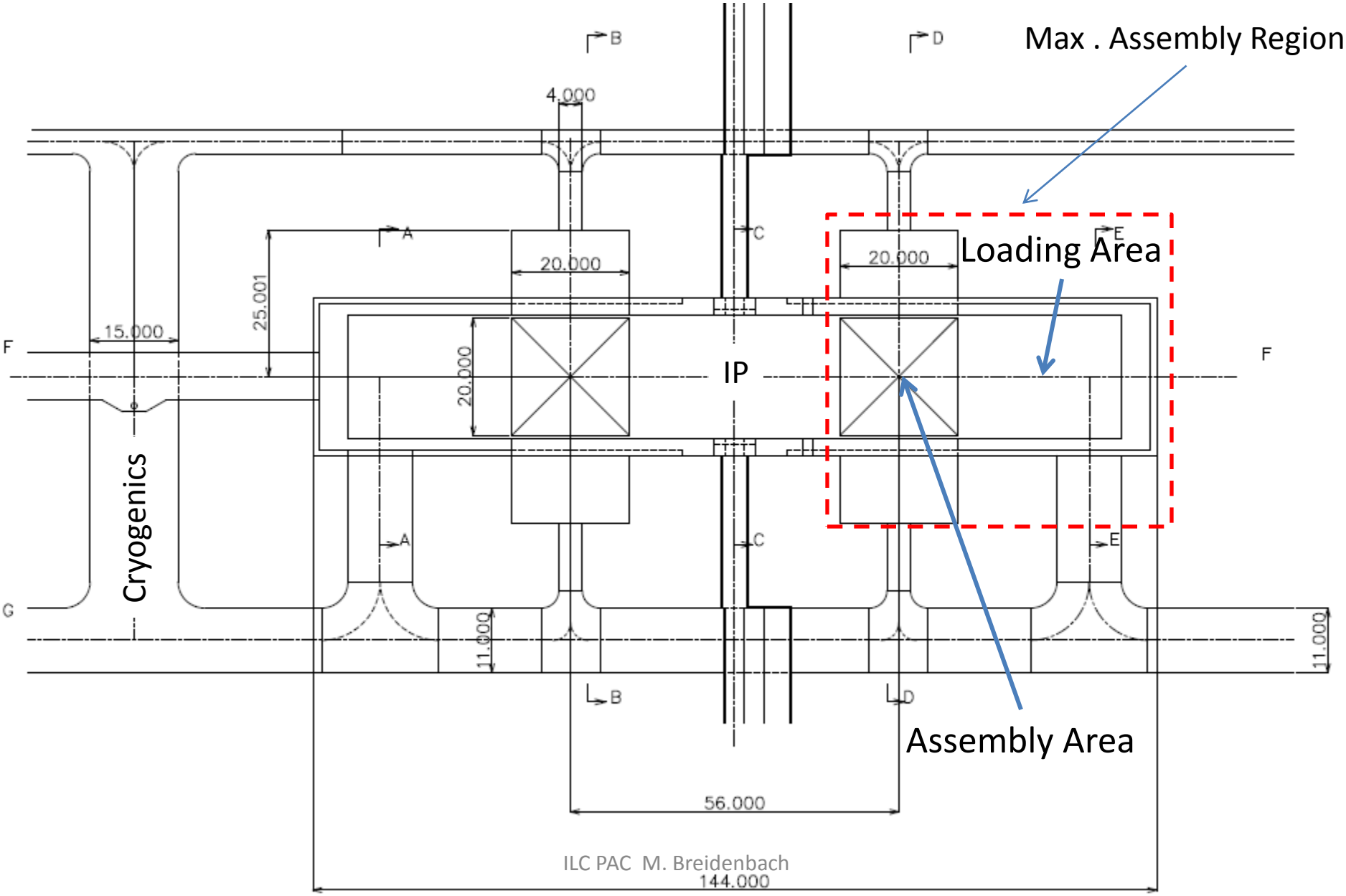

Site Delivery prior the start of the Detector Assembly

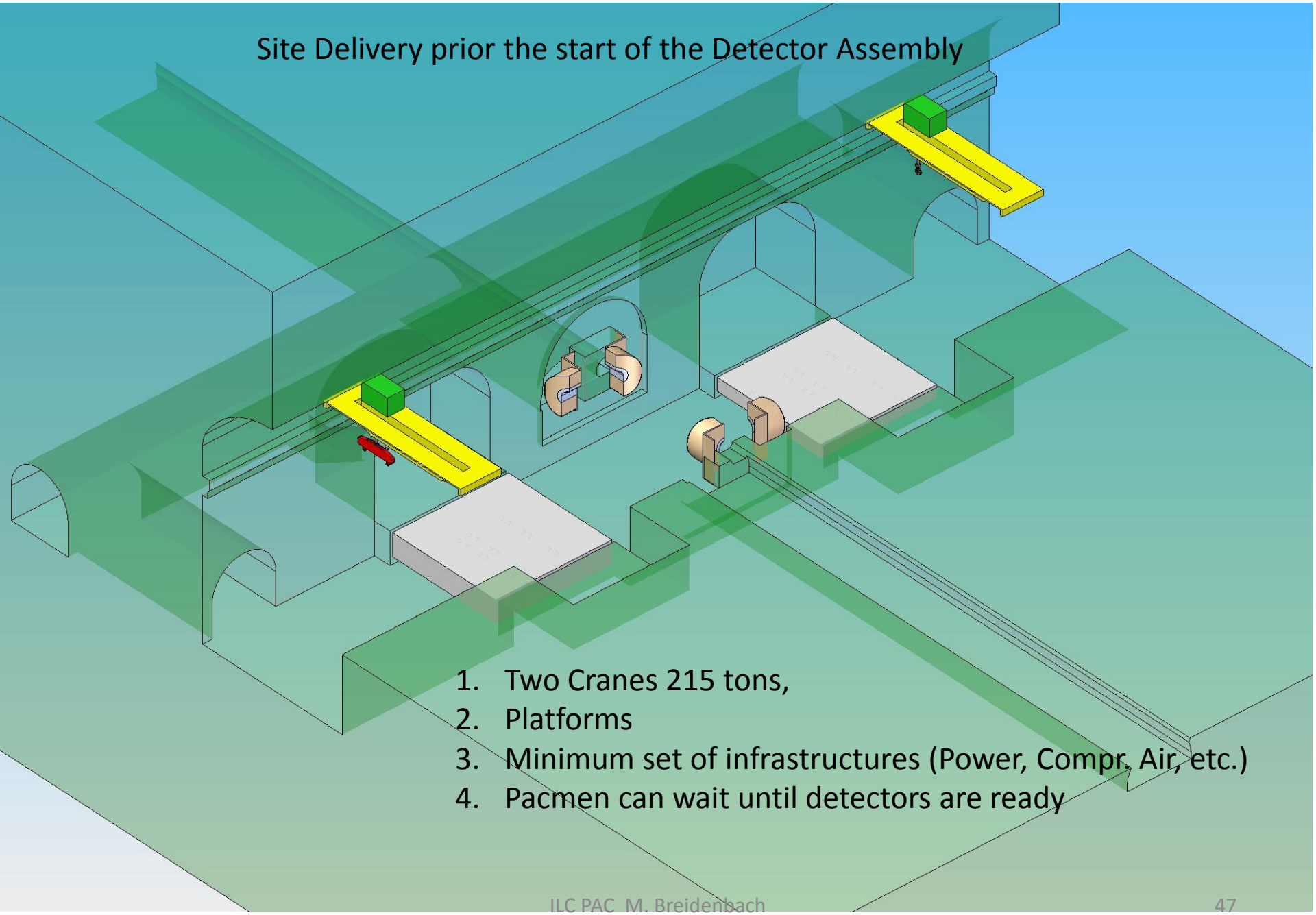

1. Two Cranes 215 tons,
2. Platforms
3. Minimum set of infrastructures (Power, Compr. Air, etc.)
4. Pacmen can wait until detectors are ready

Door Assembly on the platform

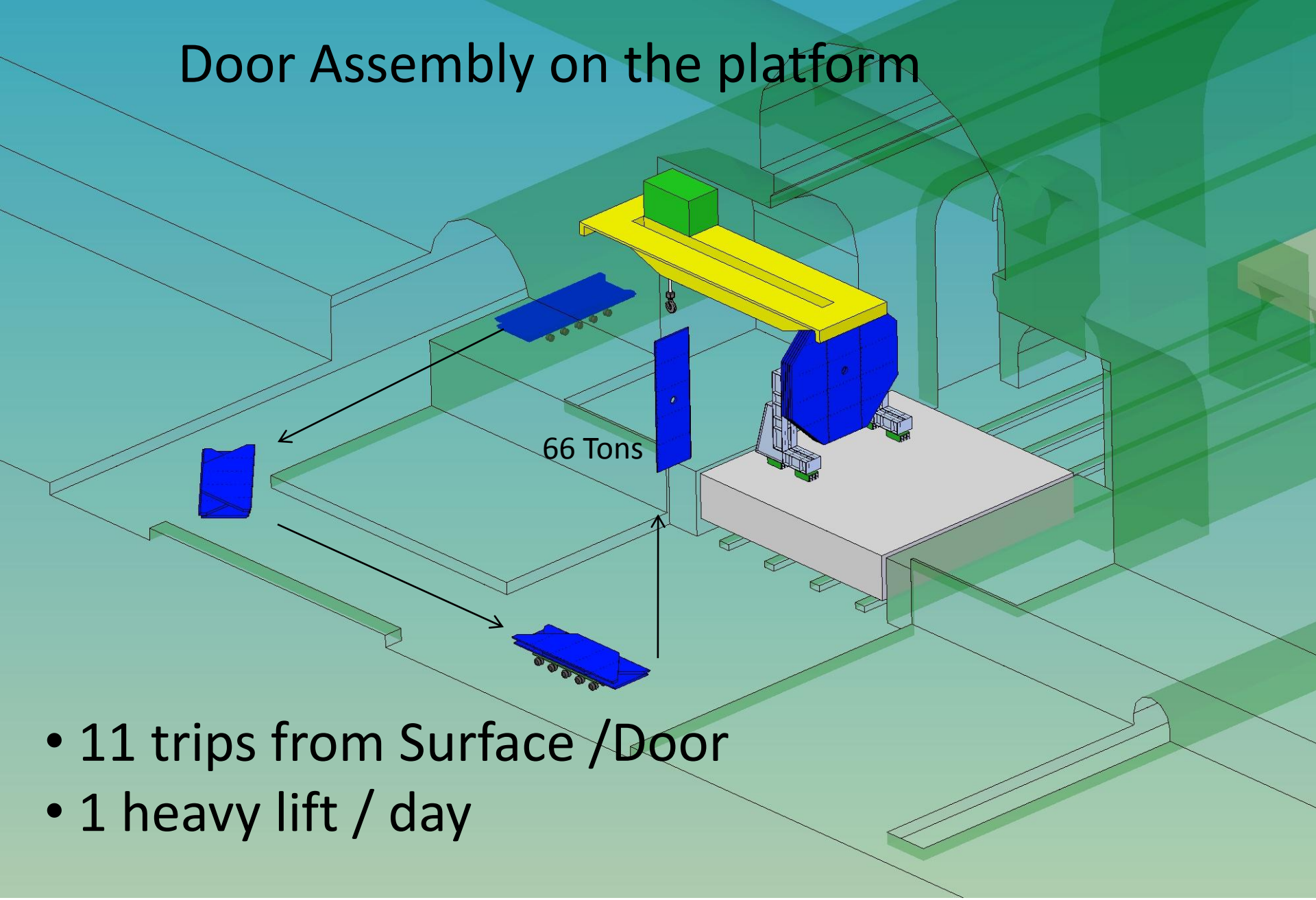

- 11 trips from Surface /Door
- 1 heavy lift / day

Doors completed – Moved in the alcoves

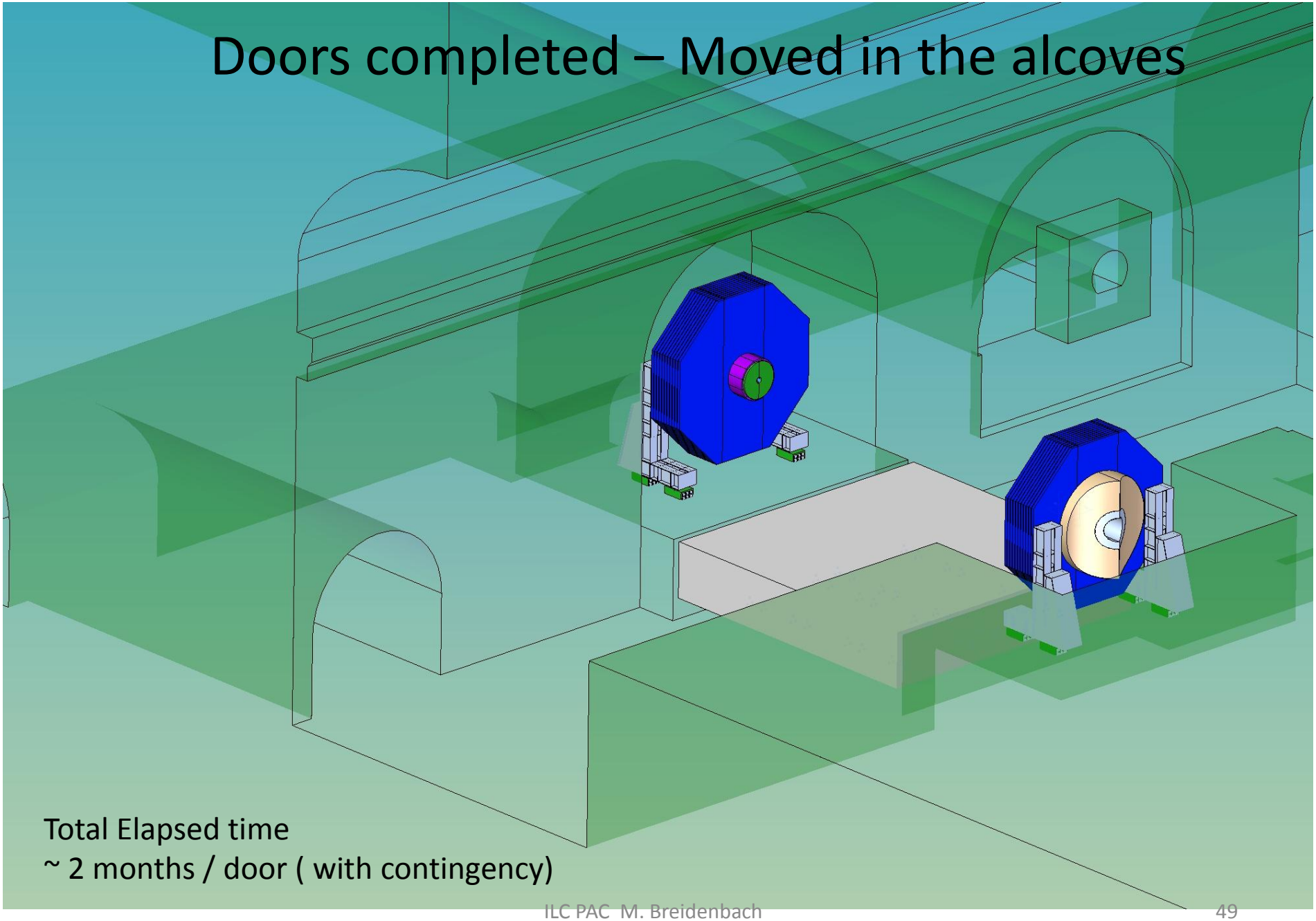

Total Elapsed time
~ 2 months / door (with contingency)

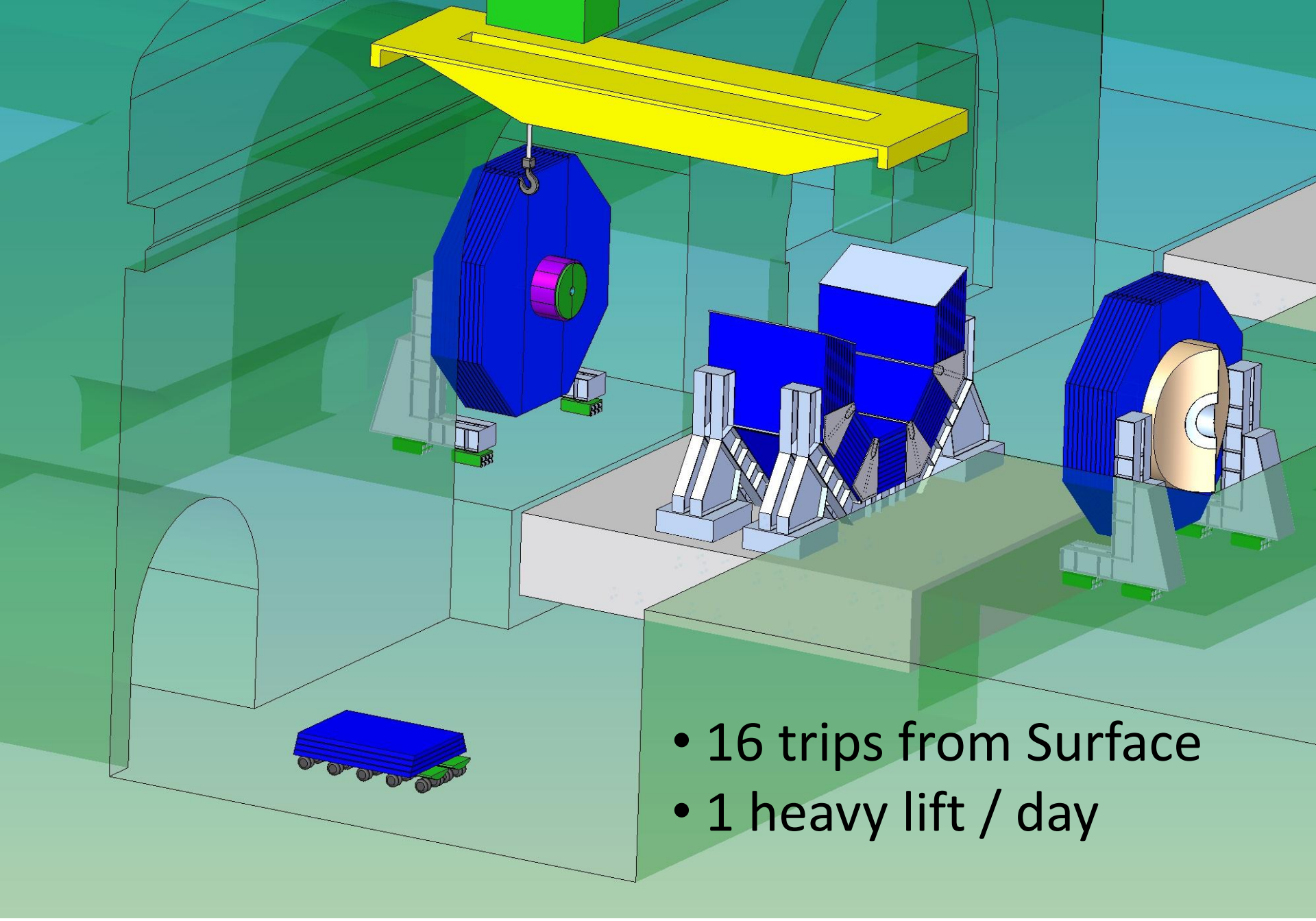

- 16 trips from Surface
- 1 heavy lift / day

Access Tunnel, Coil

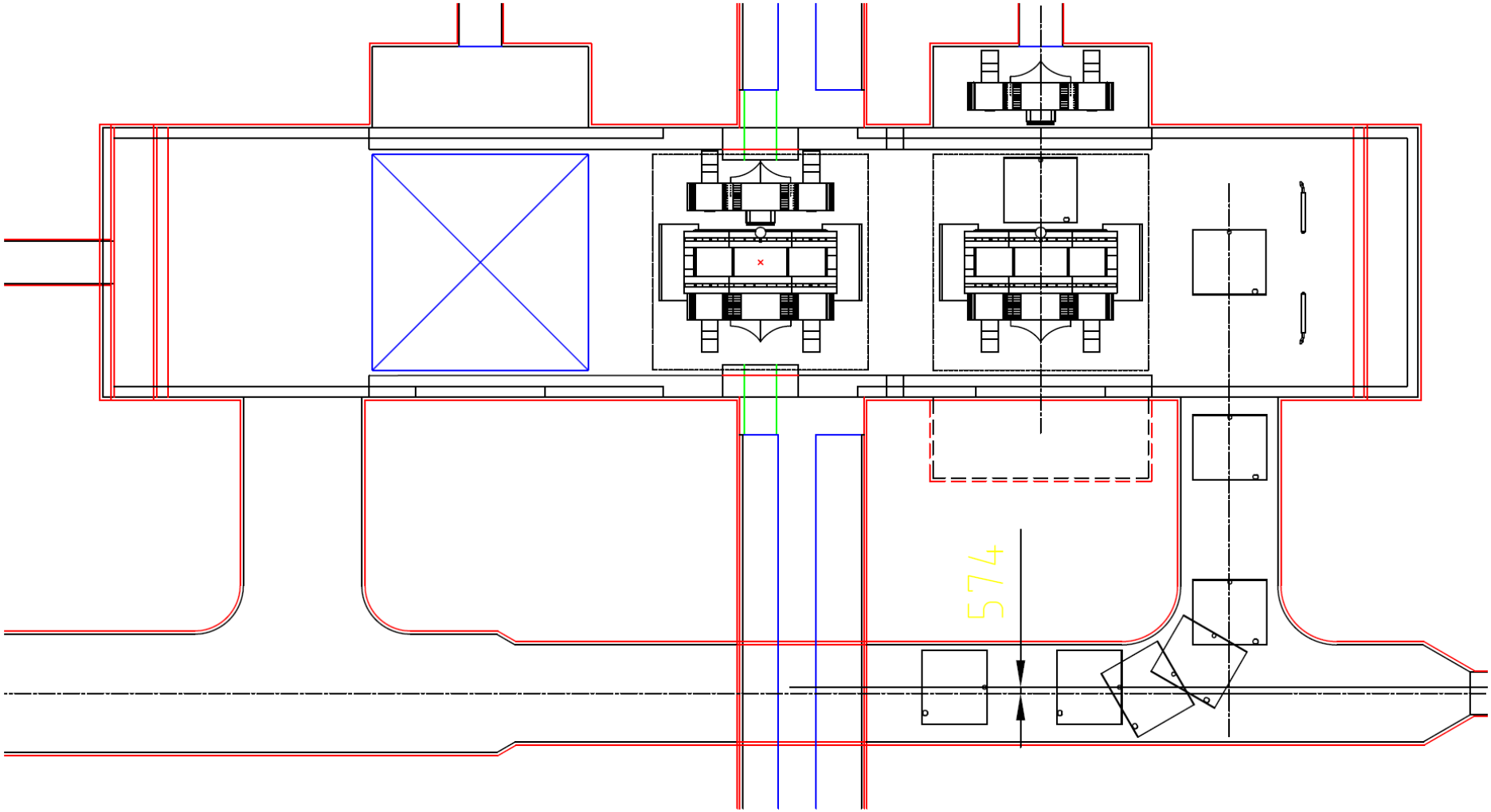

Solenoid on truck,

Solenoid Installation

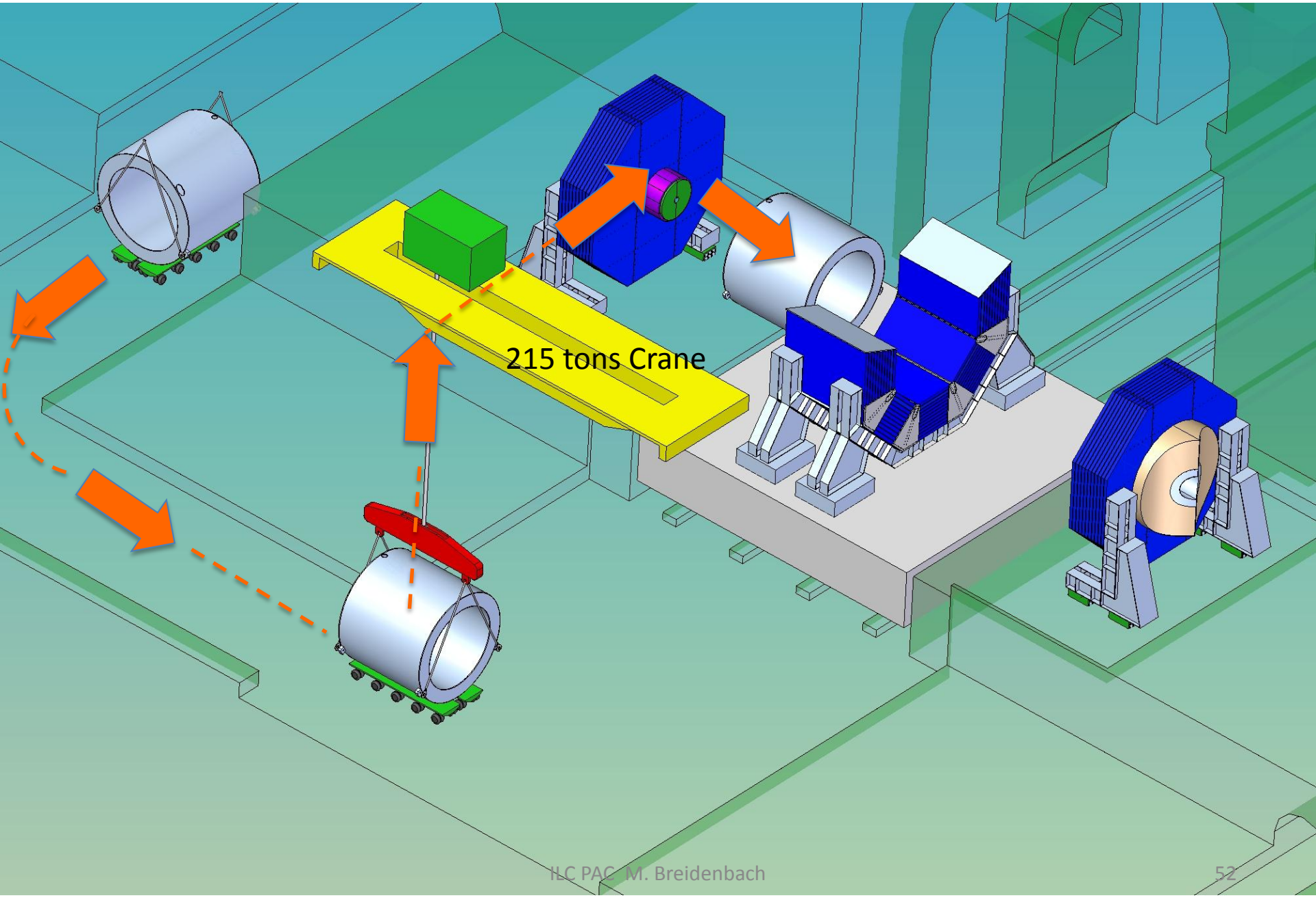

HCAL Barrel, 12 wedges x 38 tons

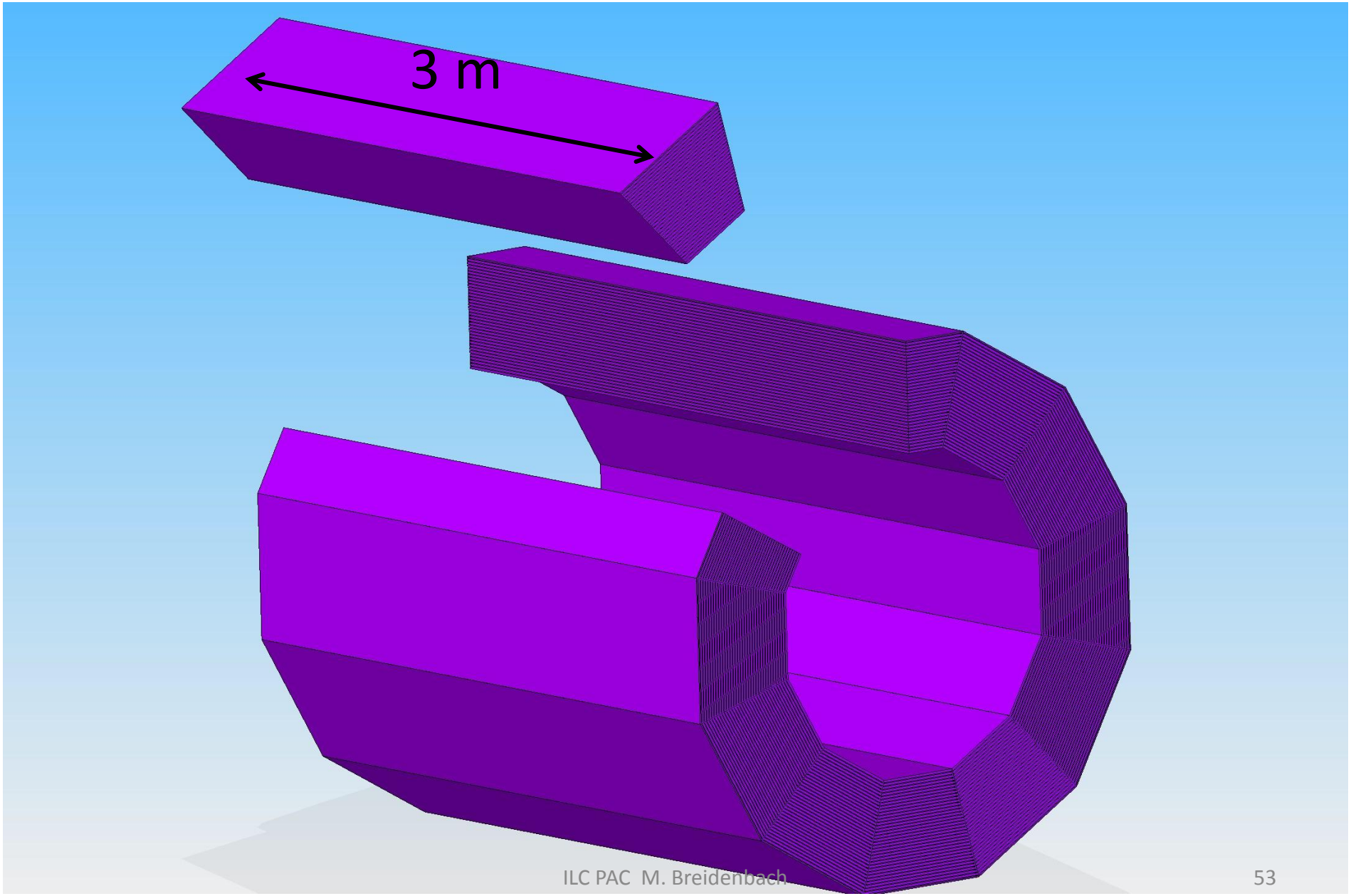

HCAL Barrel Assembly

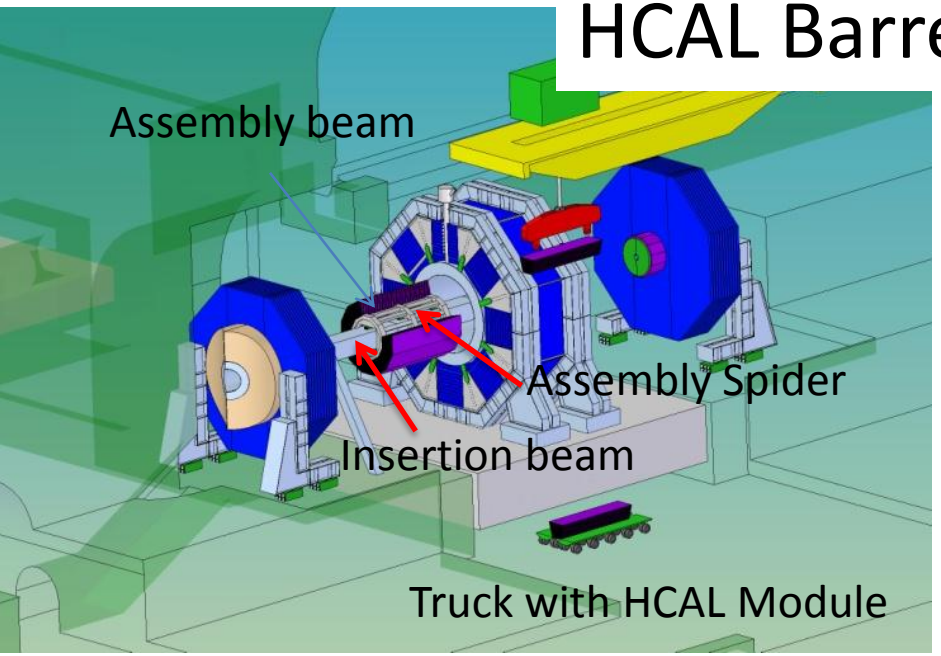

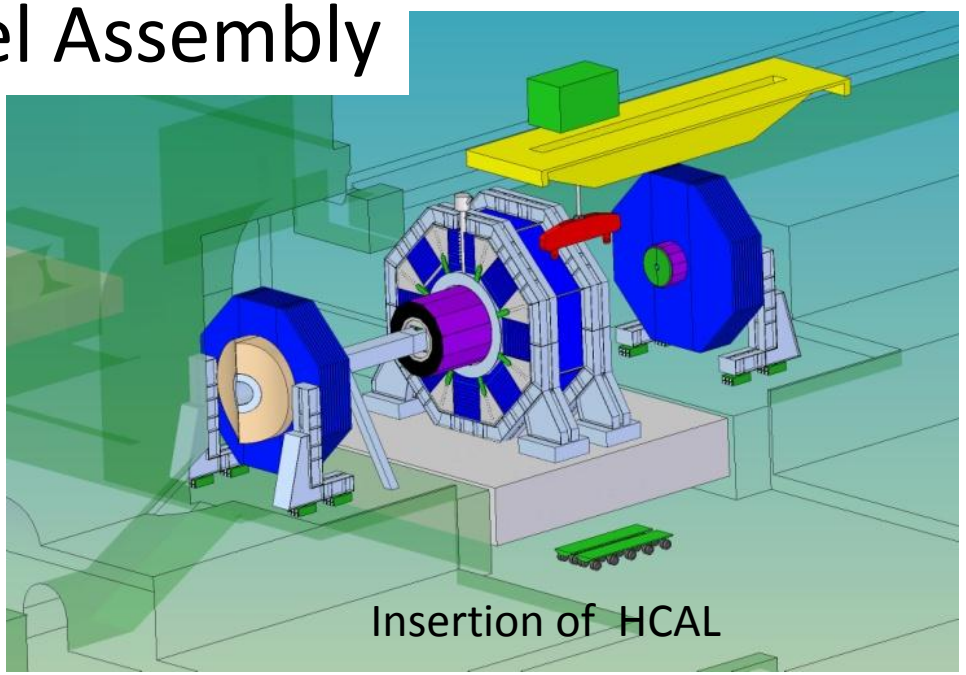

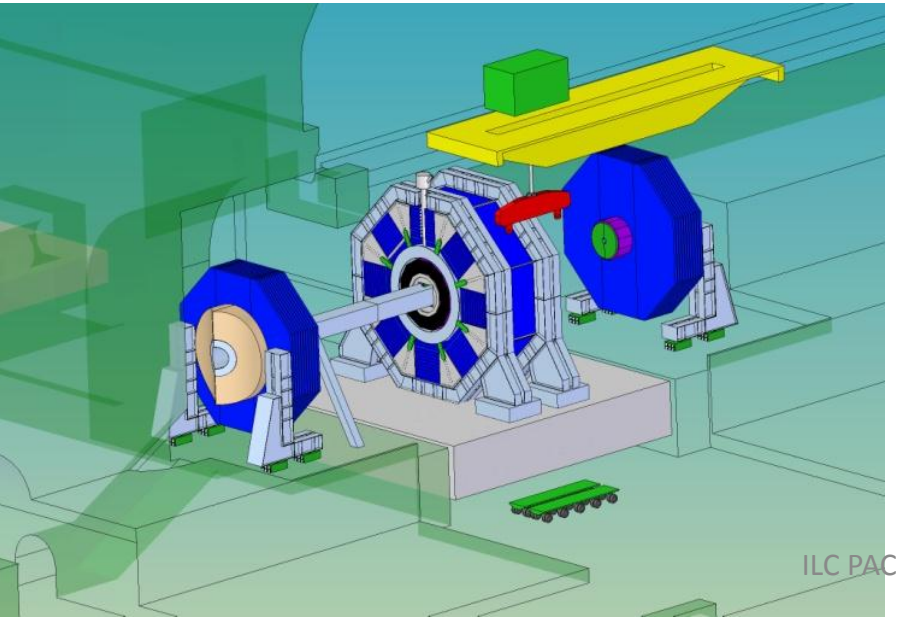

SLD, Liquid Argon Calorimeter Assembly Beam

Possible Optimizations

- Length reduction of the Loading Area
- Total length 2 x 56 m vs. 2 x 72 m
- Space around IP as temporary storage for tooling

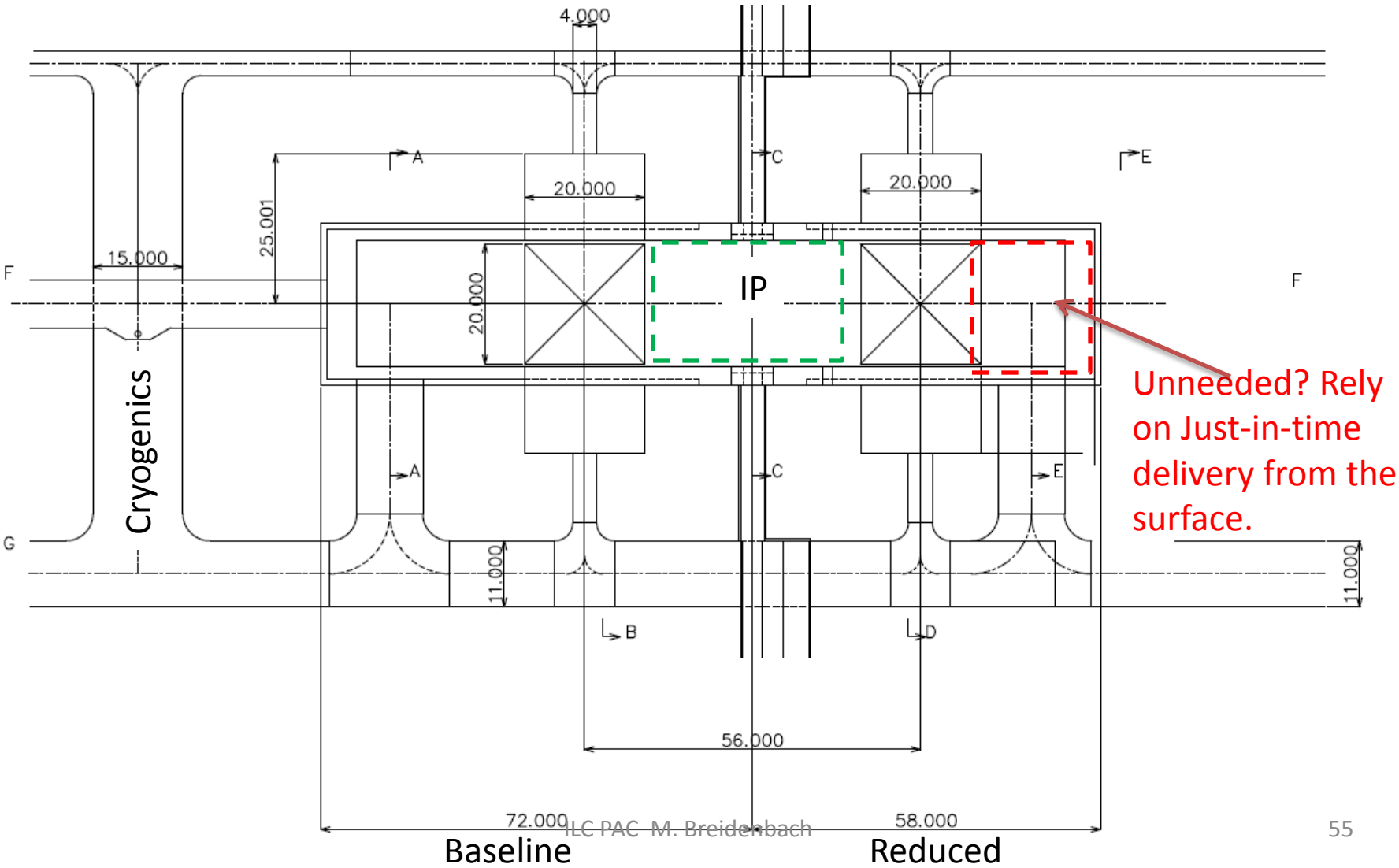

Surface Area, Very preliminary study

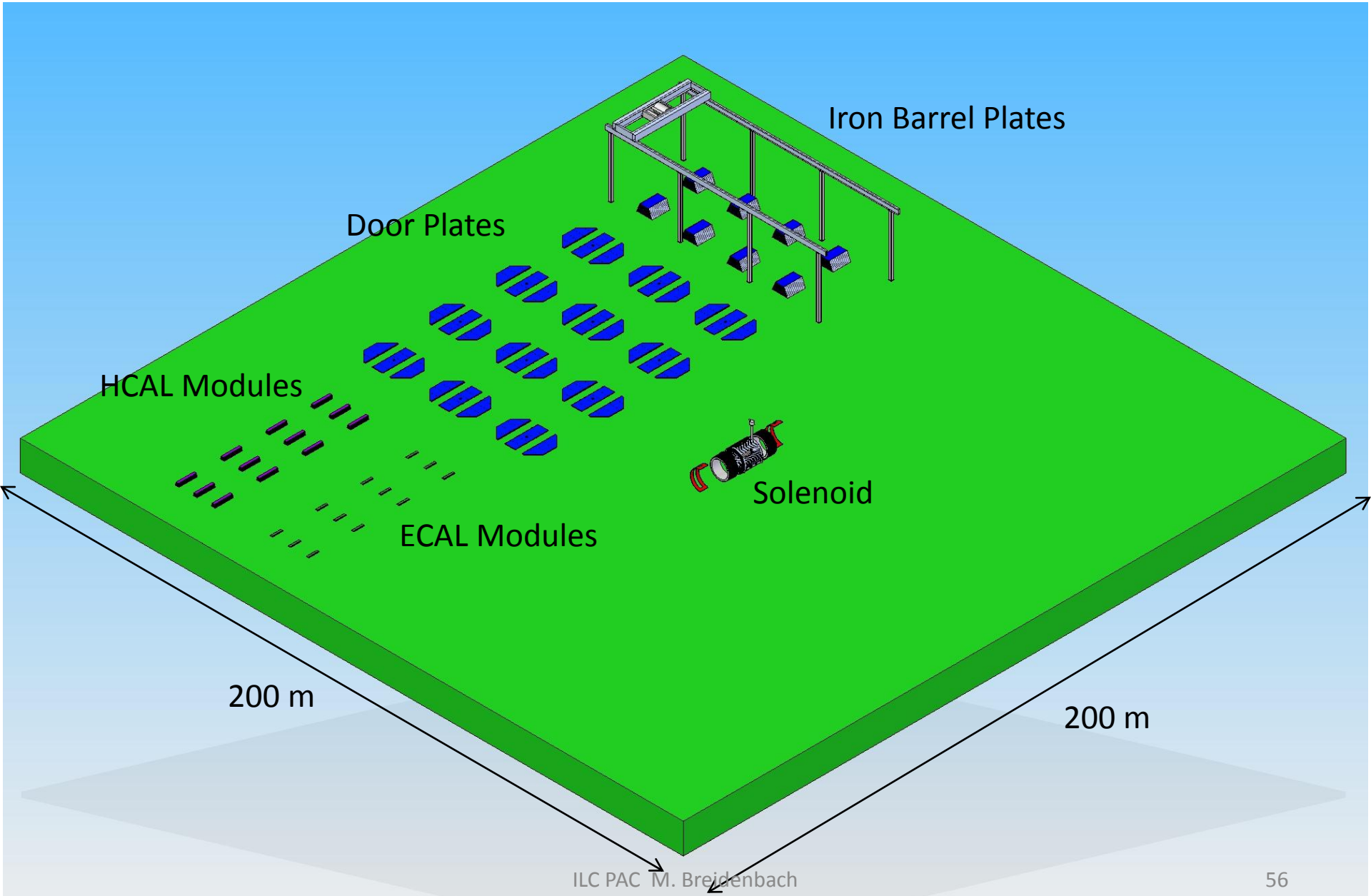

QD0 supported from the doors

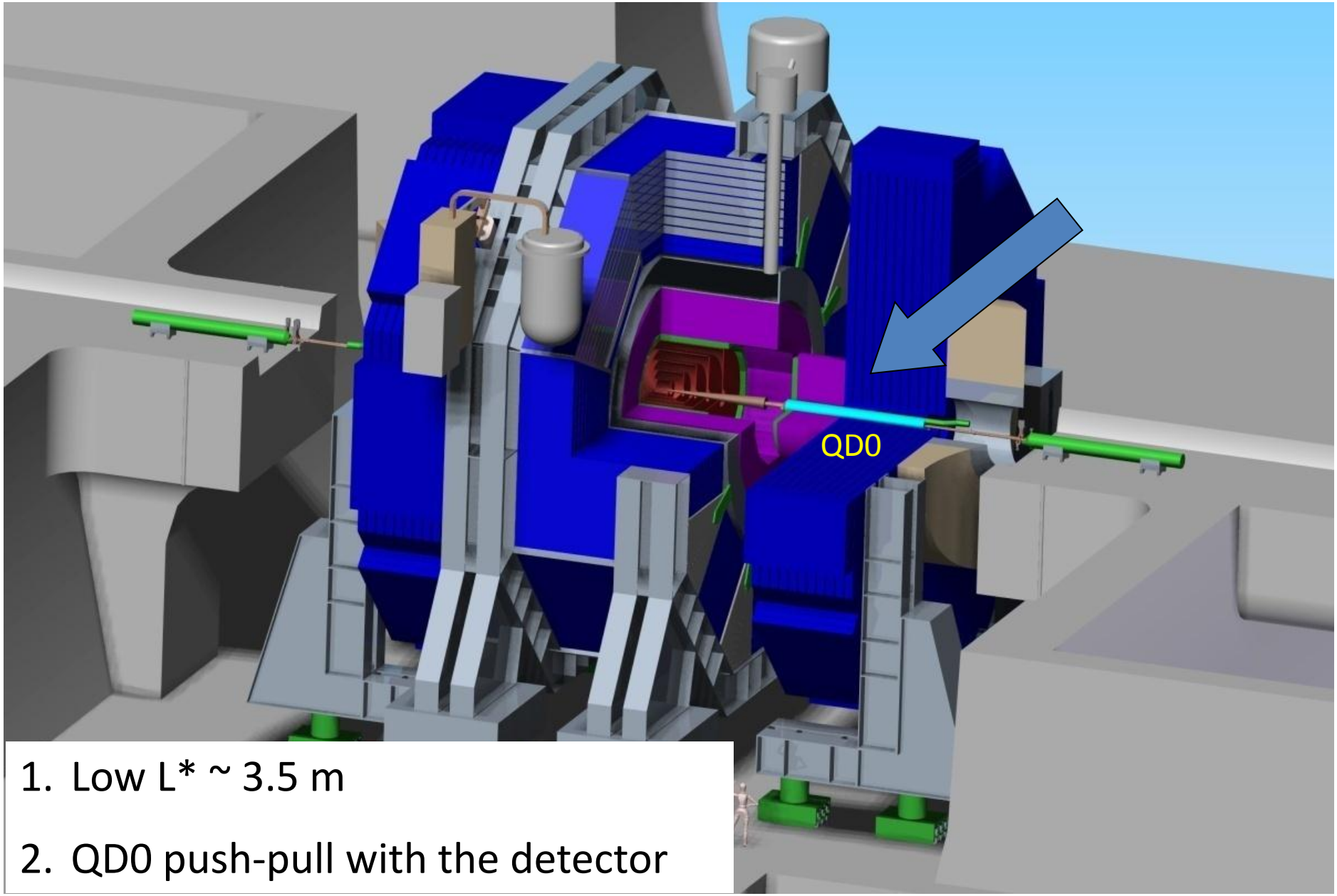

1. Low L* ~ 3.5 m
2. QD0 push-pull with the detector

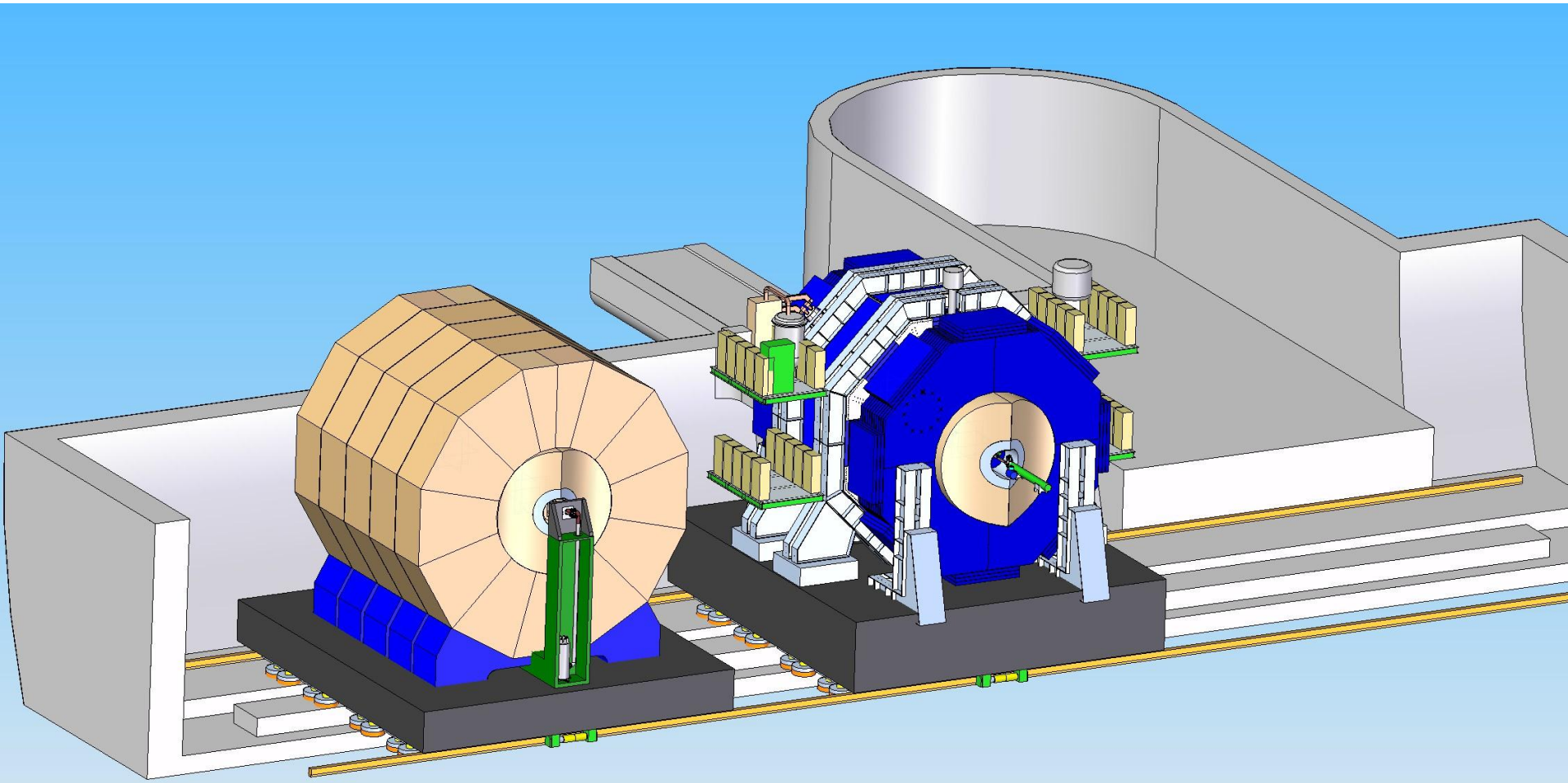

ILD and SID moving on platforms

Agreed at ALCPG11 at Eugene, OR

Details of cavern displacement and roller/airpads being studied by ARUP.

SiD - R20 region –details beginning to converge with BNL

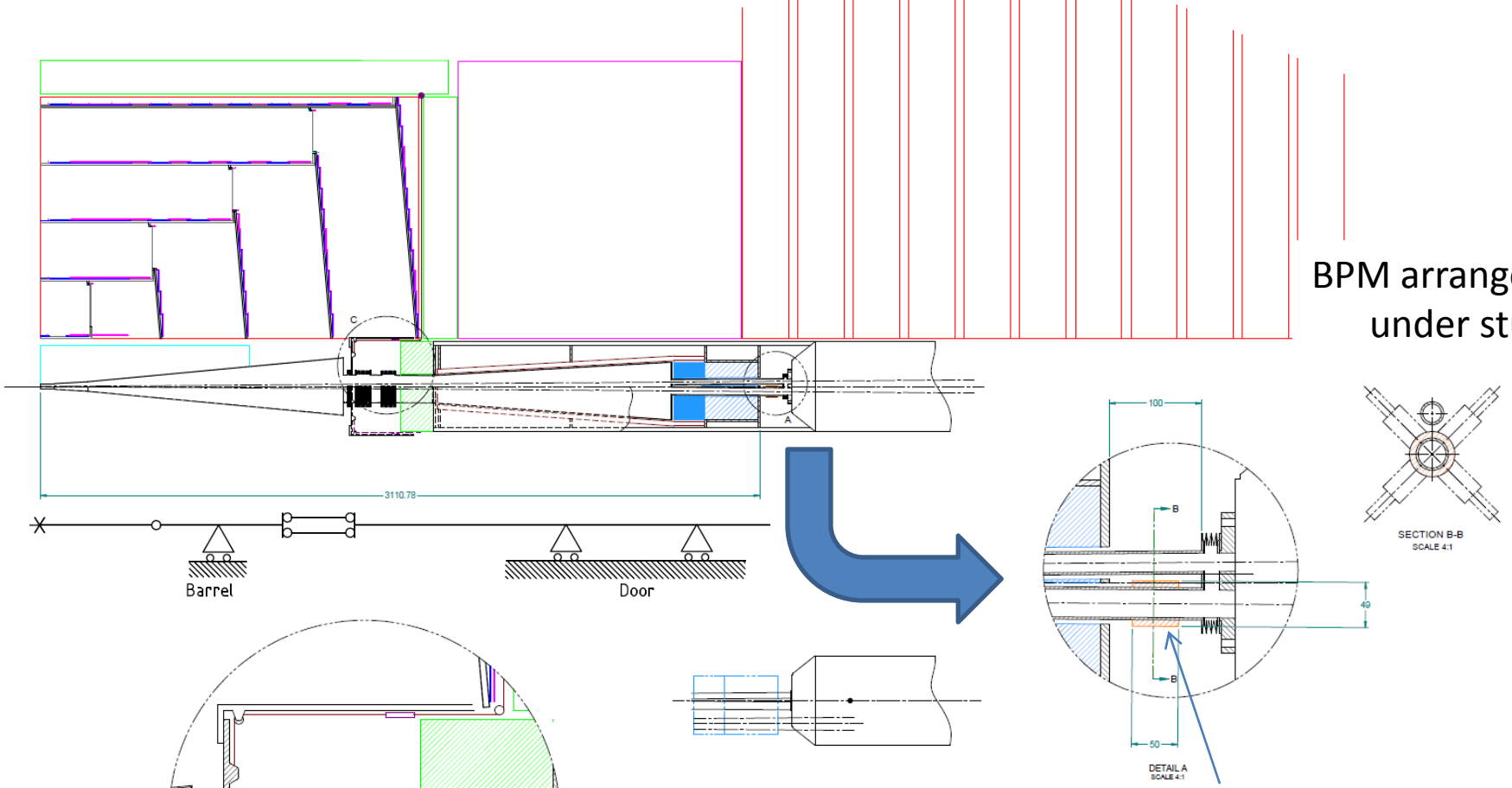

BPM arrangement, under study

Gap Lumical vs. QD0
BPM for IP Lum. Fedback

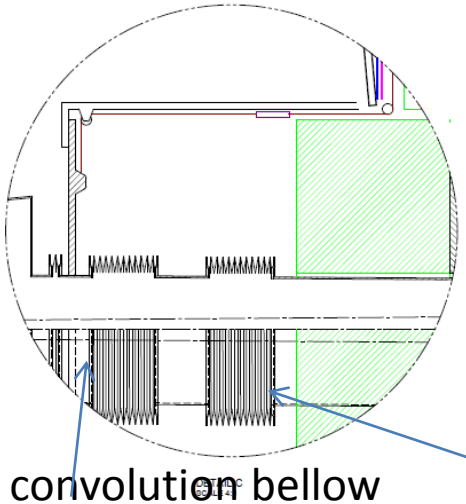

Single convolution bellow
Kinematic Mount. VTX

Multi convolution bellows
Stress Relief QD0 vs. VTX

Costs summary

- This cost estimate follows the structure of that used for the LOI.
- Units costs for silicon detectors, tungsten, iron, and stainless were agreed to with ILD and CLIC.
- No agreement was reached on a standardized cost for the superconducting solenoid. SiD is still using an industrial model of production, with at least some risk externalized.
- The unit cost for HCal detectors was increased.
- Since the ILD/CLIC agreement on tungsten costs, the price of Ammonium Paratungstate has continued to rise, and it is believed that the costs are significantly underestimated. See the sensitivity analysis below.
- A decision has been made to change the baseline option for the muon detectors from RPC's to scintillator. The cost effects of that change are not known, and the cost here is for RPC's.

Costs

SiD Interim Cost Estimate
M. Breidenbach
28 March 2012

- This cost estimate follows the structure of that used for the LOI.
- Units costs for silicon detectors, tungsten, iron, and stainless were agreed to with ILD and CLIC.
- No agreement was reached on a standardized cost for the superconducting solenoid. SiD is still using an industrial model of production, with at least some risk externalized.
- The unit cost for HCal detectors was increased.
- Since the ILD/CLIC agreement on tungsten costs, the price of Ammonium Paratungstate has continued to rise, and it is believed that the costs are significantly underestimated. See the sensitivity analysis below.
- A decision has been made to change the baseline option for the muon detectors from RPC's to scintillator. The cost effects of that change are not known, and the cost here is for RPC's.

	ILC Costs					
		M&S Base (M$)	M&S Contingency (M$)	Engineering (MY)	Technical (MY)	Administrative (MY)
1.1.1	Beamline Systems	3.7	1.4	4.0	10.0	0.0
1.1.2	VXD	2.8	2.0	8.0	17.7	0.0
1.1.3	Tracker	17.7	6.9	24.0	53.2	0.0
1.1.4	EMCal	99.9	39.9	13.0	287.8	0.0
1.1.5	Hcal	50.2	19.5	13.0	27.2	0.0
1.1.6	Muon Sys	5.3	1.6	5.0	19.8	0.0
1.1.7	Electronics	4.9	1.6	44.1	41.7	0.0
1.1.8	Magnet	112.5	38.7	29.2	25.0	0.0
1.1.9	Installation	4.1	1.1	4.5	46.0	0.0
1.1.10	Management	0.9	0.2	42.0	18.0	30.0
Totals		302.0	112.9	186.8	546.5	30.0

The above table is believed to be in ILC style accounting. To directly compare with others, it may be advisable to add the M&S base and contingency to get $415M.

Unit Cost Sensitivity

Sensitivity Analysis: If the cost of the indicated material were to double, then base cost of total detector 415M$ increases to:

Material	Total Cost (M$)	Fractional Increase
Silicon	522	1.26
Tungsten	434	1.05
Iron	478	1.15
Stainless	418	1.01

Translation to US Costing

Start in 2016; construction duration 6 years; Inflation 3.5%/yr, Indirects: 6% M&S; 20% Labor

$834M$

Conclusions

- The SiD Concept remains a key element of future ILC/CLIC plans.
- R&D progress made as resources have allowed.
- US DoE wants to retain ILC as a future option, but there are significant R&D support issues at the universities and labs.
- There is a core of SiD supporters who will try:
  - To complete necessary detector R&D.
  - Complete the benchmark studies.
  - Write the DBD.
- The DBD is not a Technical Design Report, but it should be a step beyond the LOI.

Backup

2D Soil-Structure Interaction Model

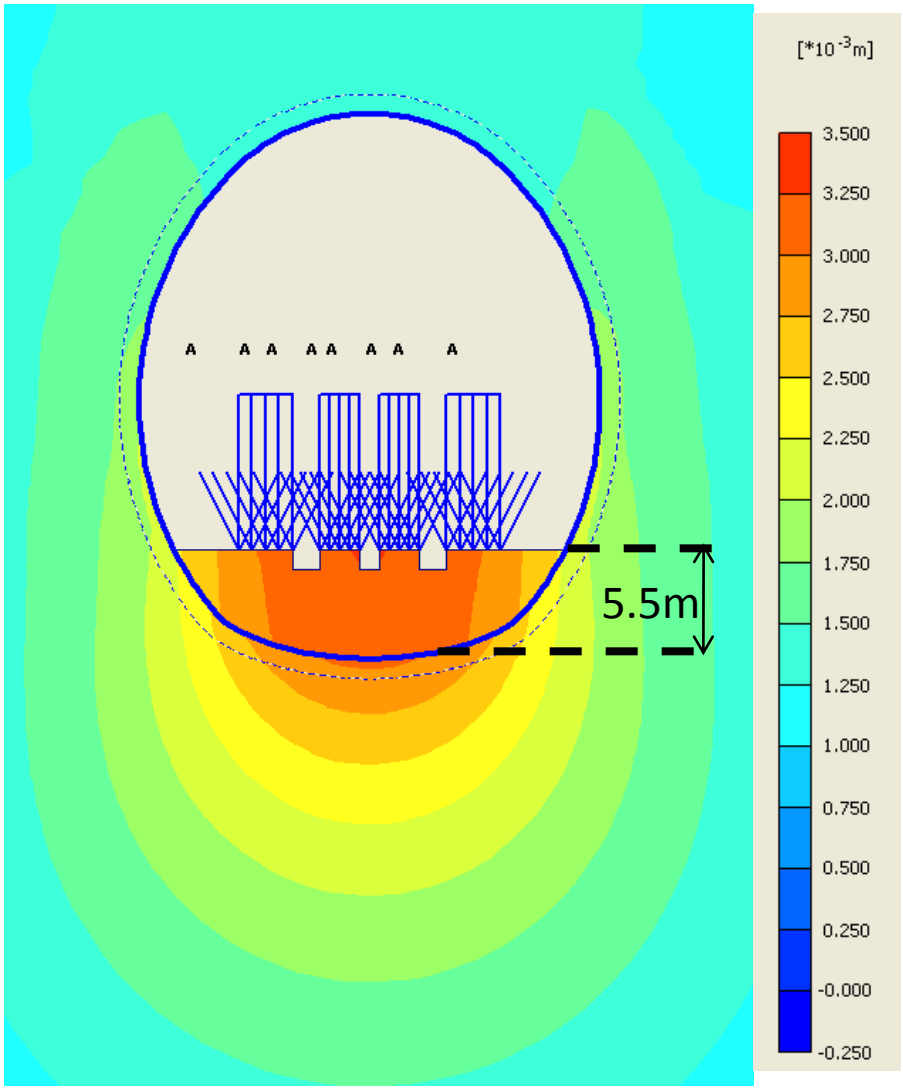

Extrapolated Invert

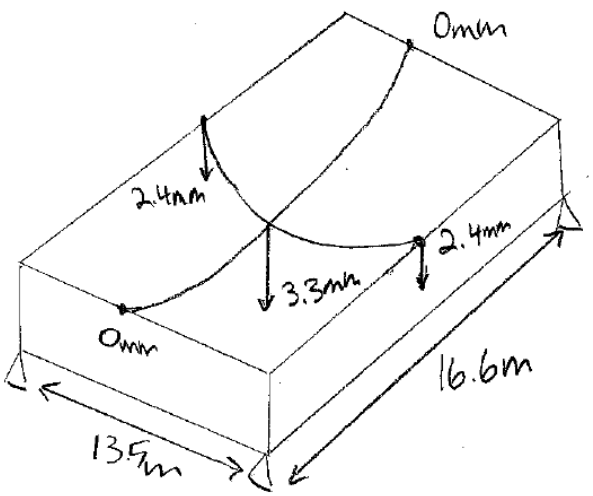

Longitudinal: 3.3mm / 16.6m = 0.2mm/m x 20m = **4mm/20m >** 0.5mm/20m (deformation criteria from concrete slab design)

Transversal: 3.3mm-2.4mm / 13.5m = 0.07 x 20 = **1.4mm/20m > 0.5mm/20m**.

Unacceptable invert deformation. Highlights the need to sequence cavern construction

ARUP

Interaction Cavern Invert Performance

Platform Analysis (with ILD, worst case)

ARUP

Platform own weight

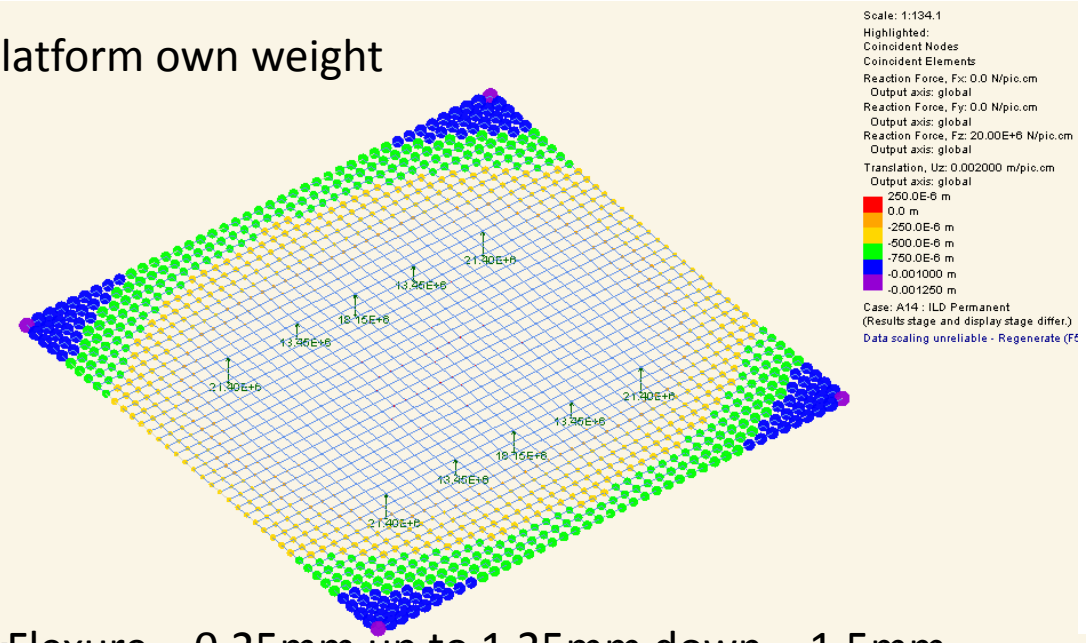

Flexure = 0.25mm up to 1.25mm down = 1.5mm

But note this is a long term load case and the value will increase with creep - ongoing

Platform + ILD

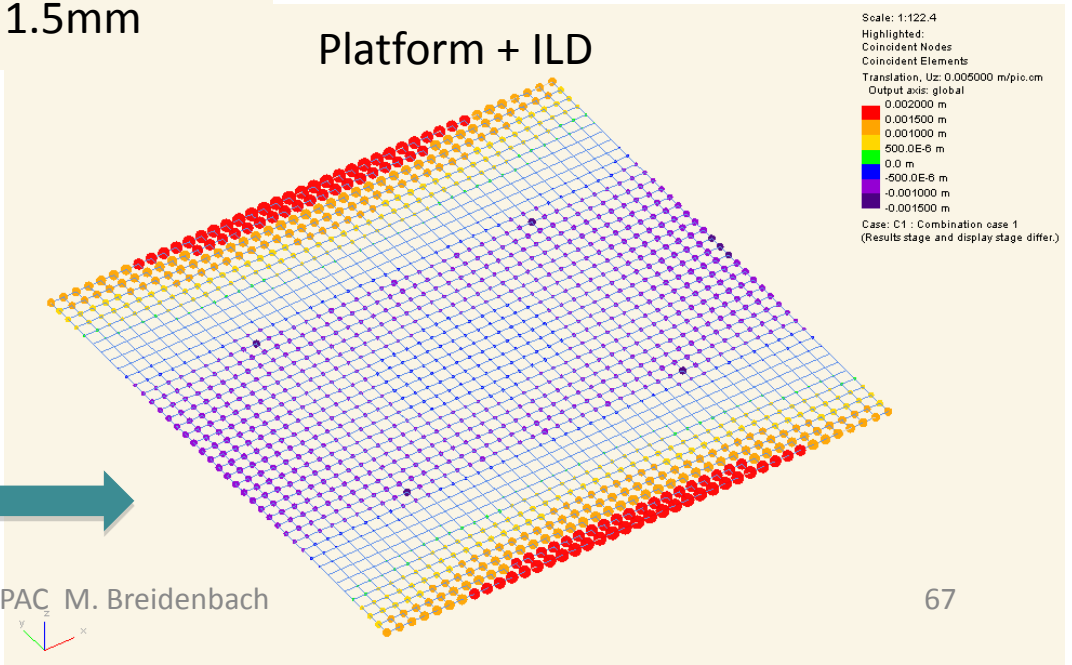

Flexure = +1.9mm to -1.0mm

This meets the +/- 2mm tolerance

Comparison of

Air pads or Rollers

0.385 kTon

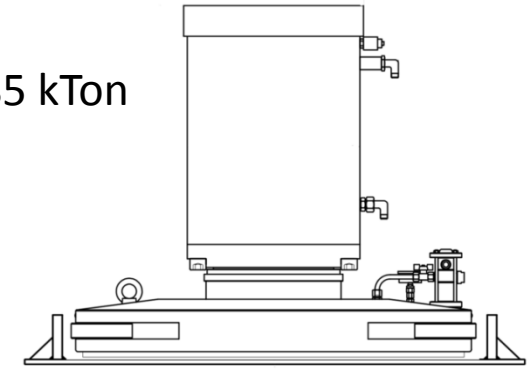

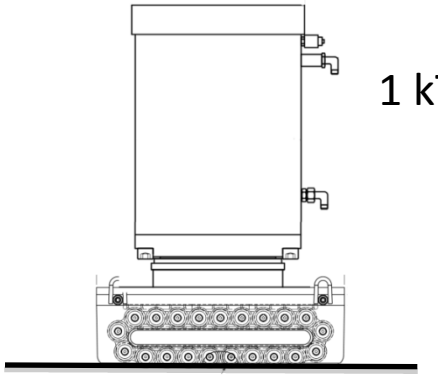

1 kTon

Pads	Rollers
Min 60 required (for ILD, no redundancy)	Min 18 required (for ILD)
No hardened track->can accommodate minor steps	Specialist hardened and flattened track
Design for 1% friction	Design for 3% friction
Pressure infrastructure	Larger propulsion infrastructure
Run-away	Higher friction ->less run-away

SiD - R20 region, Common Support Tube – support and dimensions ~agreed with BNL.

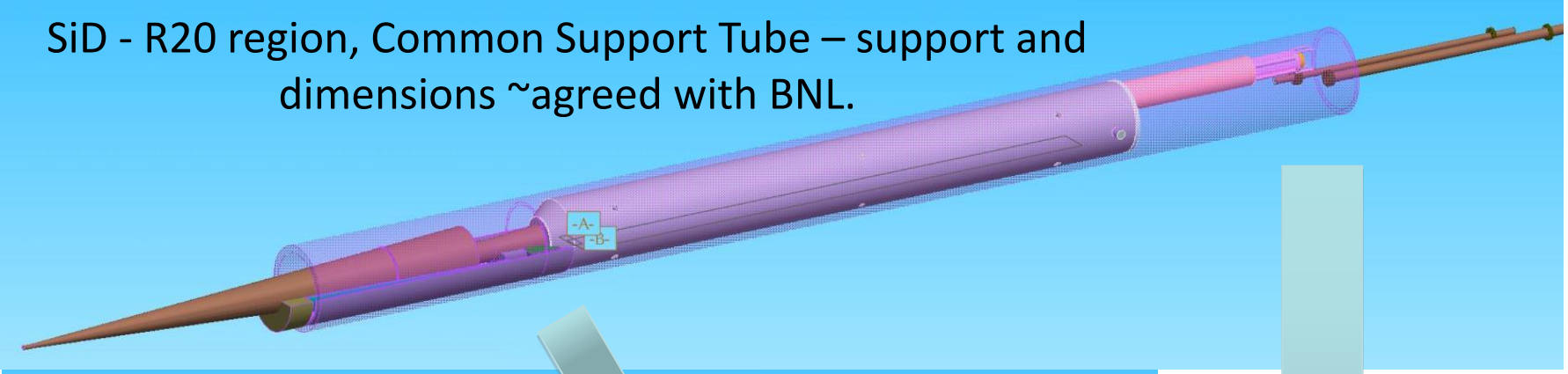

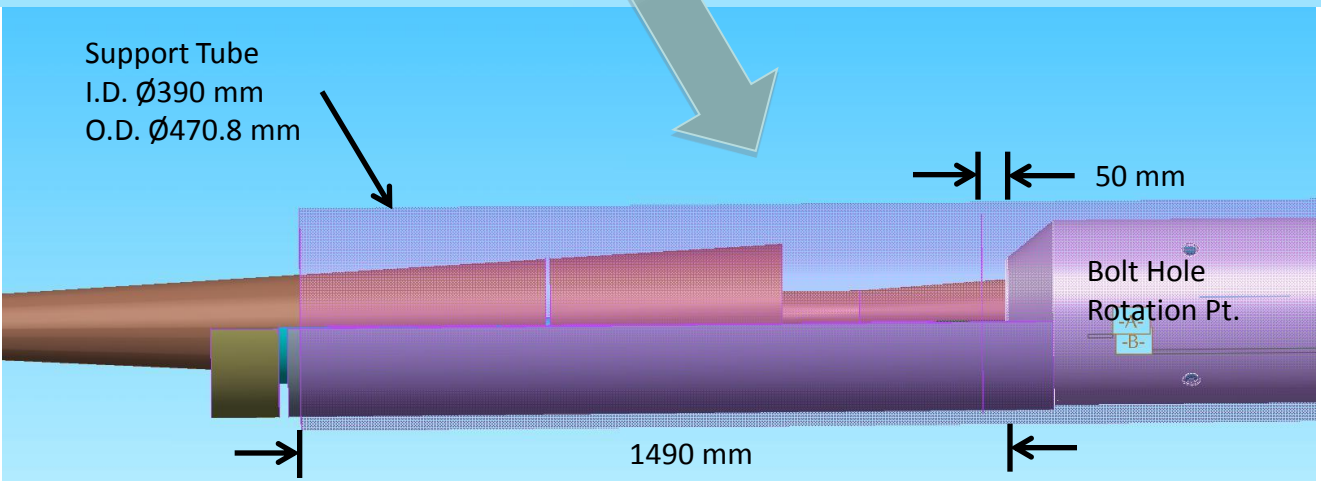

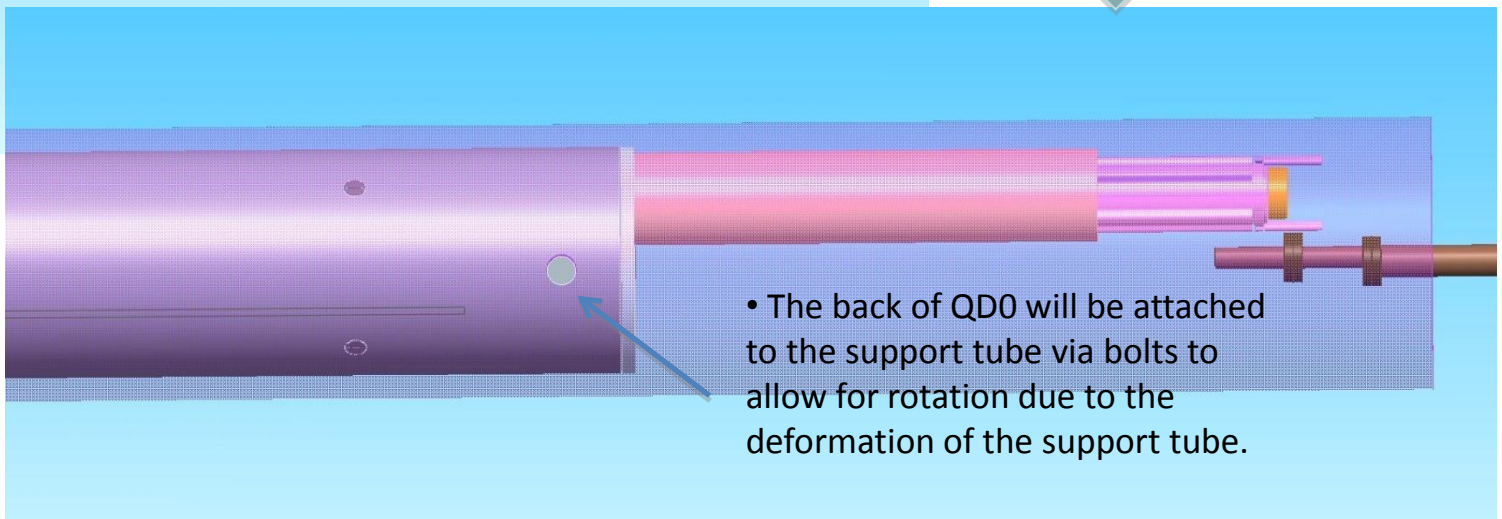

- The back of QD0 will be attached to the support tube via bolts to allow for rotation due to the deformation of the support tube.

Cryogenics layout

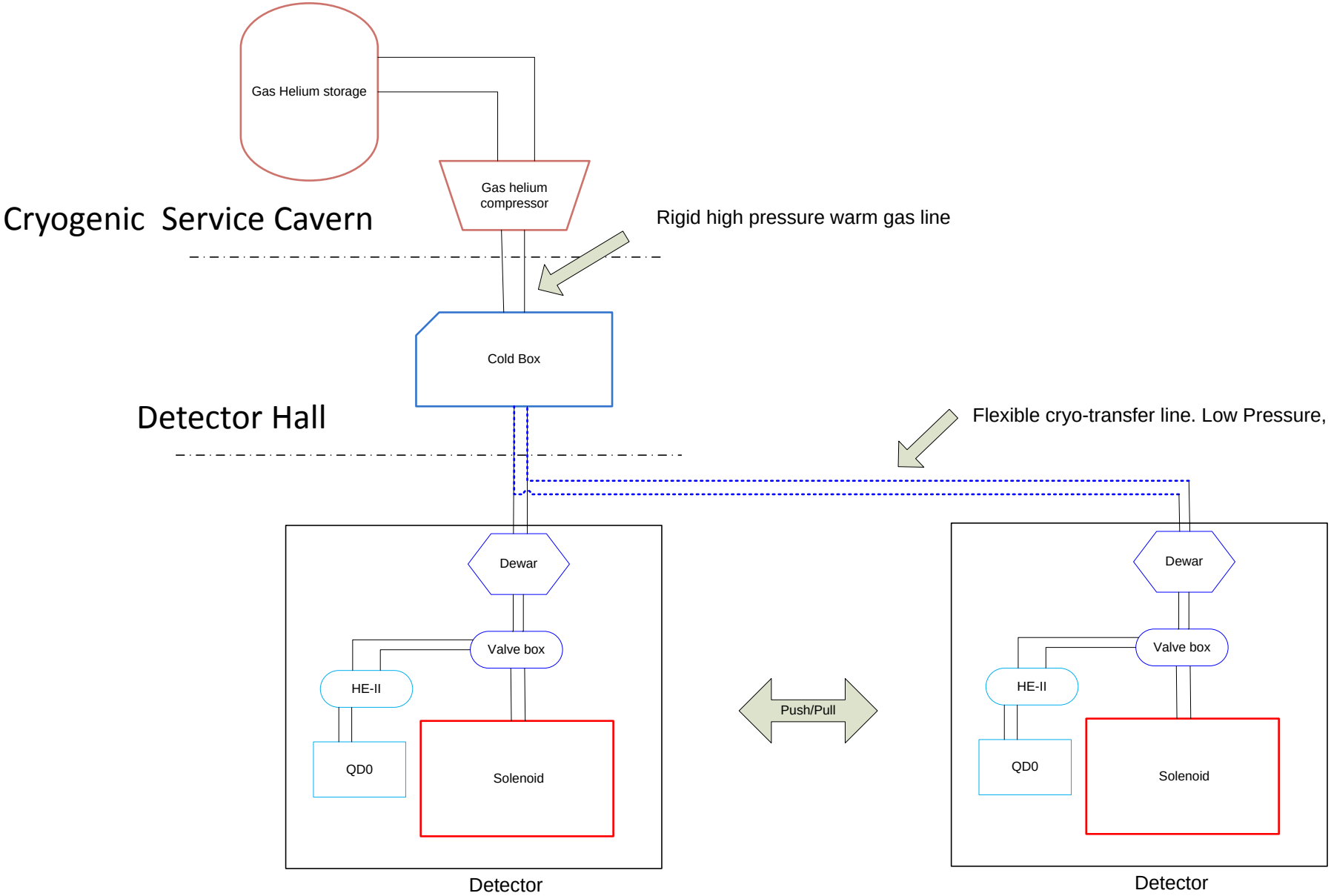

Raw hits → Physics objects

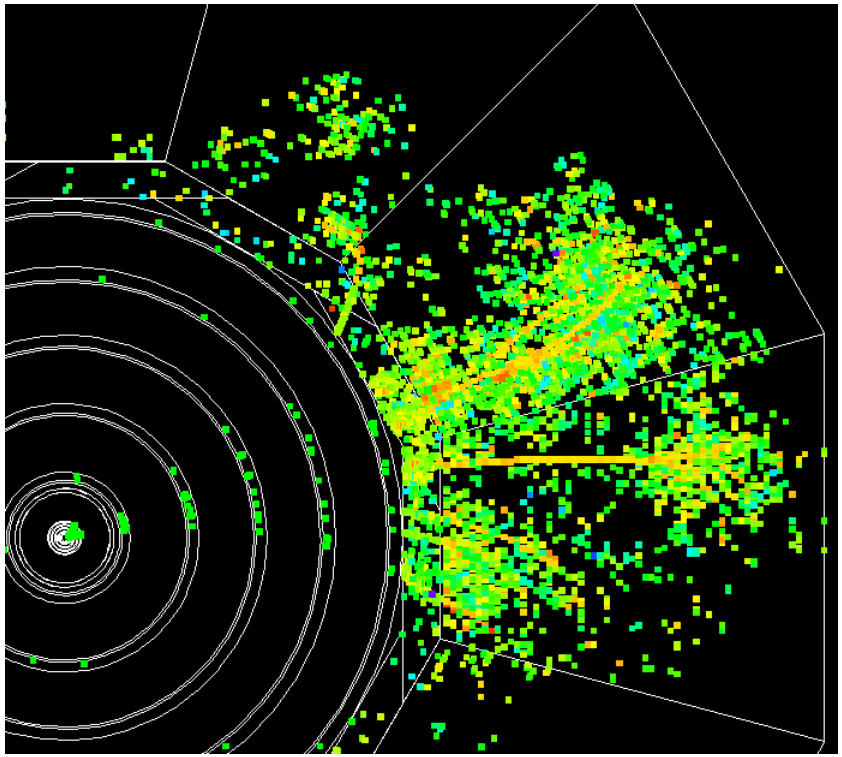

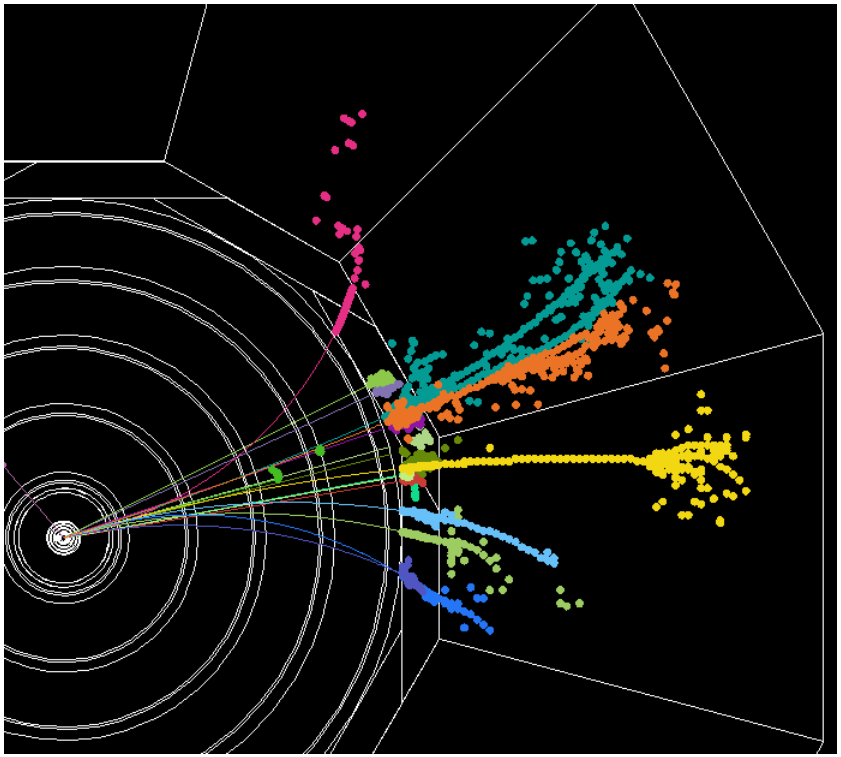

N. Graf & J. McCormick (SLAC)
It provides an interface between events reconstructed using org.lcsim (Java) and pandoraPFA (C++), demonstrating the interregional cooperation and collaboration enabled by the use of a common event data model and file format (LCIO). Successfully used to simulate the response of SiD' (clic_sid_cdr) at 3TeV for the CLiC CDR. Performs exceptionally well at 1TeV using a digital RPC HCal. Number of improvements have been made recently to provide more flexibility in defining input LCIO collections and to accommodate changes to pandoraPFA itself. Fast, flexible and performant.

Systematic detector configuration studies– optimization.....

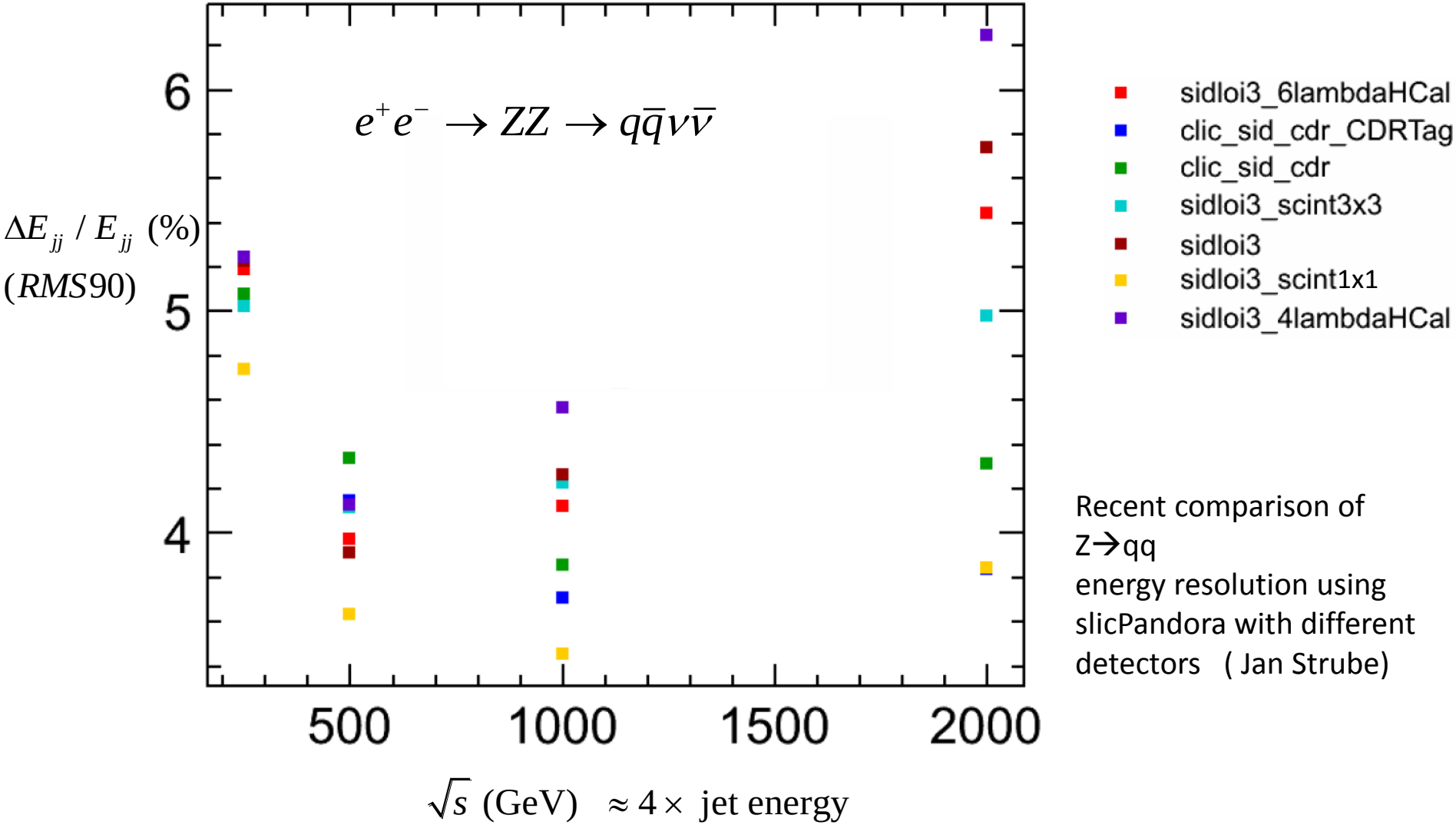

Recent comparison of Z→qq energy resolution using slicPandora with different detectors (Jan Strube)