PAC (Fermilab 15.05.2012) Presentation on:

TDR Baseline Decisions and Reviews *Part 2:*

- Adapting the Main Linac design to requirements of different sites

M. Ross

A. Yamamoto

N. Walker

Finishing the ILC Technical Design Phase (TDP):

During the last year of the TDP, we are taking advantage of an excellent opportunity to adapt the ILC Main Linac design to specific sites, namely the two ‘mountain – topography’ sites in Japan.

Allows us to take the ILC design forward – a critical step.

A good way to finish the TDP!

Adapting the RDR linac to specific sites - Process

- **Siting opportunities:**
  - CERN (similar to RDR)
  - Dubna (similar to ‘cut and cover’)
  - Japan → steady support from local institutions
- **ILC Global Design must remain flexible and should welcome consideration of suggested sites**
  - even if they differ from sites studied for RDR in key ways.
- **Symbolizes the global nature of design effort.**

Adapting the RDR linac to specific sites - Outline

1. **Linac Tunnel studies in each Region**
   - Key issues: Cost and HLRF
2. **Optimization of the mountain-topography site tunnel shape and construction technique**
   - Return to the double-enclosure high-power klystron (RDR) scheme: Distributed Klystron
3. **High Level RF**
4. **CFS reviews and preparation for the TDR.**

Adapting the RDR linac to specific sites - Outline

1. **Linac Tunnel studies in each Region**
   - Key issues: Cost and HLRF
2. **Optimization of the mountain-topography site tunnel shape and construction technique**
   - Return to the double-enclosure high-power klystron (RDR) scheme: Distributed Klystron
3. **High Level RF**
4. **CFS reviews and preparation for the TDR.**

RDR included mandate to study different kinds of sites:

- **“The three sites reported in detail here are all ‘deep-tunnel’ solutions. The DESY and Dubna sites are examples of ‘shallow’ sites. A more complete study of shallow sites – shallow tunnel or cut-and-cover – will be made in the future…”**

Main Linac Tunnel (XTL)

Configuration studies in each region

- **EU:**
  - Study of DESY, Dubna and CERN sites
- **AM:**
  - Eight Main Linac (ML) configurations
  - (Six near surface)
- **AS:**
  - Eight machine-wide tunnel configurations
  - (Three using blasting technology)

Americas Region ML Configuration Study

A – twin deep tunnels with vertical access;
B – single deep tunnel with vertical access;
C – twin near surface tunnels;
D – single near surface tunnel with continuous surface service gallery;
E – single near surface tunnel;
F – enclosure in open cut excavation with continuous surface
service gallery;
G – enclosure in open cut excavation with continuous buried
service gallery; and
H – single tunnel enclosure in open cut excavation.

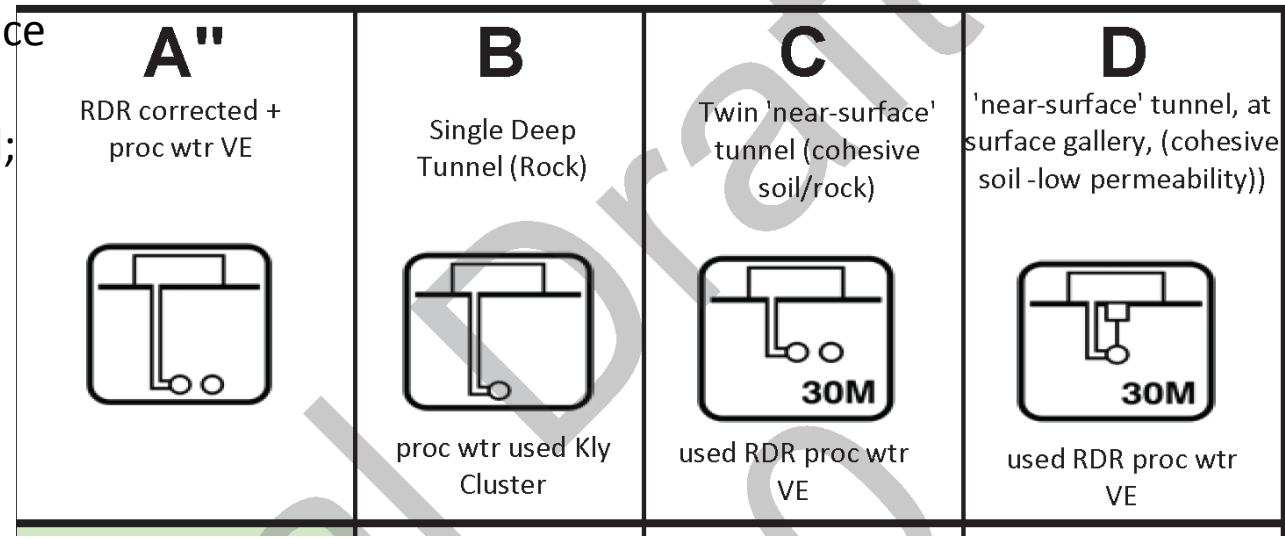

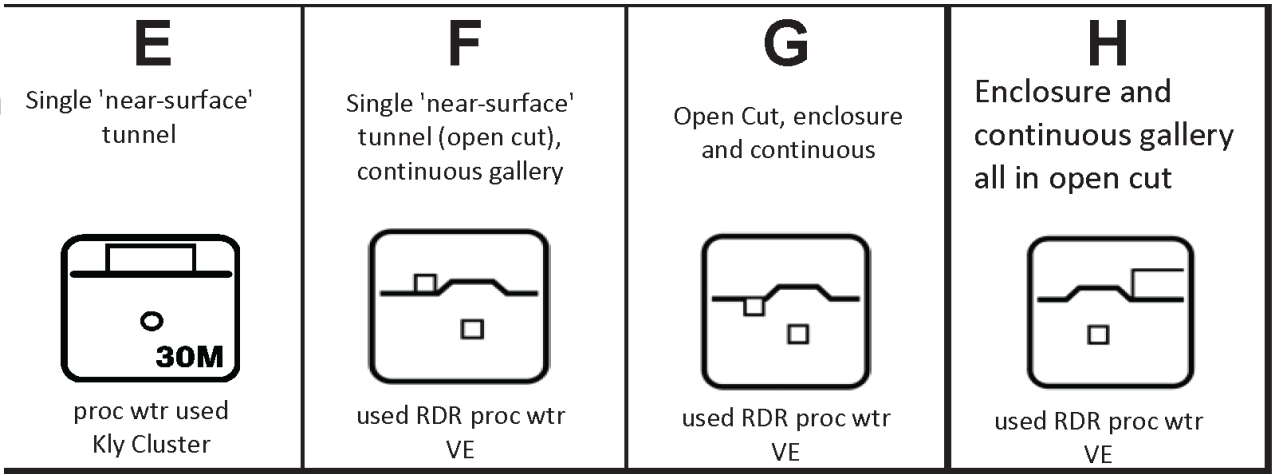

Relative cost:

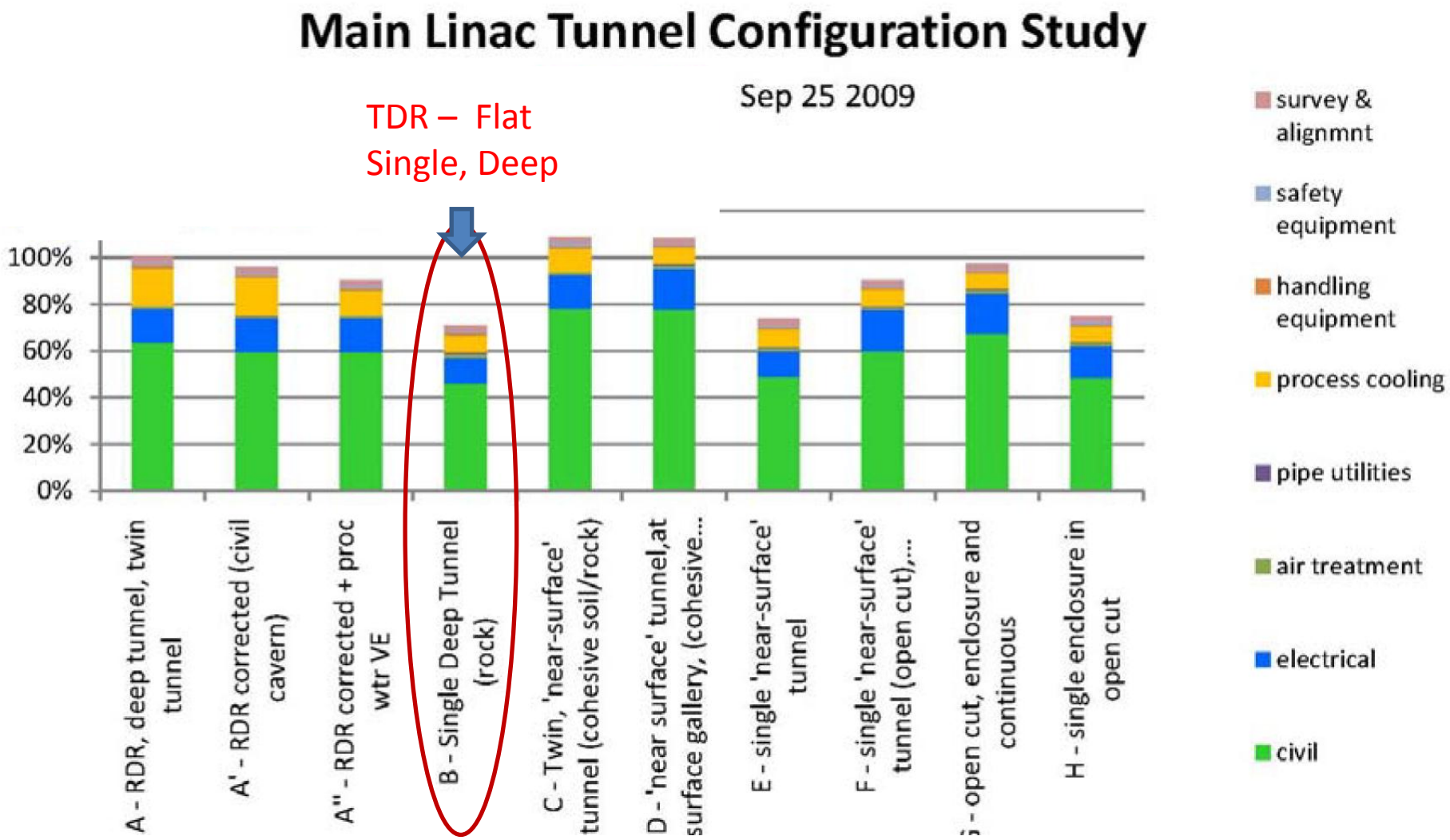

Asian Region Tunnel Configuration Study

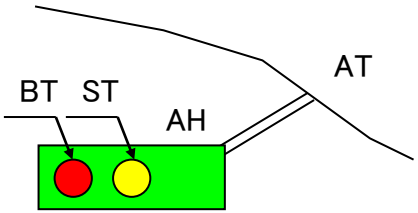

Case 1

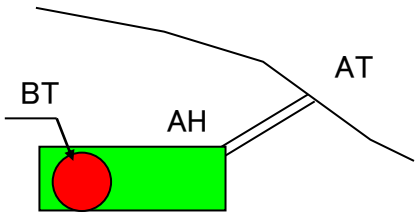

Case 2

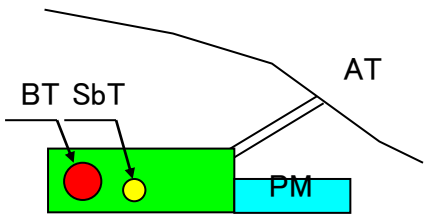

Case 3

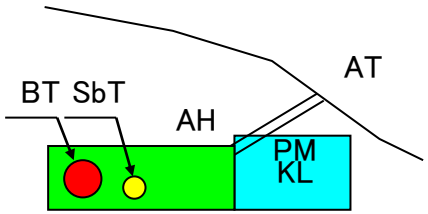

Case 4

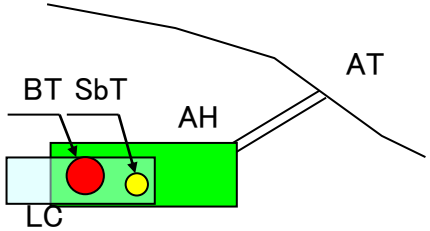

Case 5

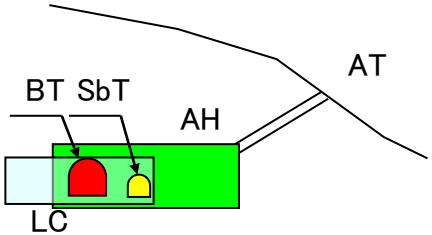

Case 6

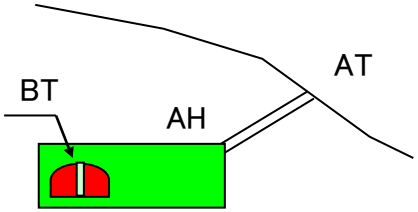

Case 7

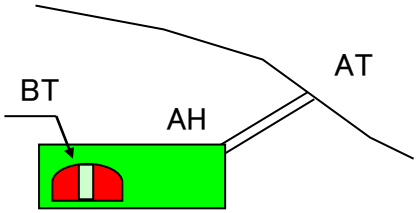

Case 8

Published 2011

Outline of Case Model (2)

CASE-3《JS-T-X》 - Single Tunnel - TBM - XFEL System

■ Layout Plan by the XFEL RF System

- Cross Section of the Beam Tunnel is the Same Size of XFEL's Tunnel in DESY.
- Sub-tunnel will be constructed for Cooling tl Water Piping, Drainage and Evacuation.
- Access Hall: a Big Cavern to Install the RF Equipment such as Pulse Modulator.

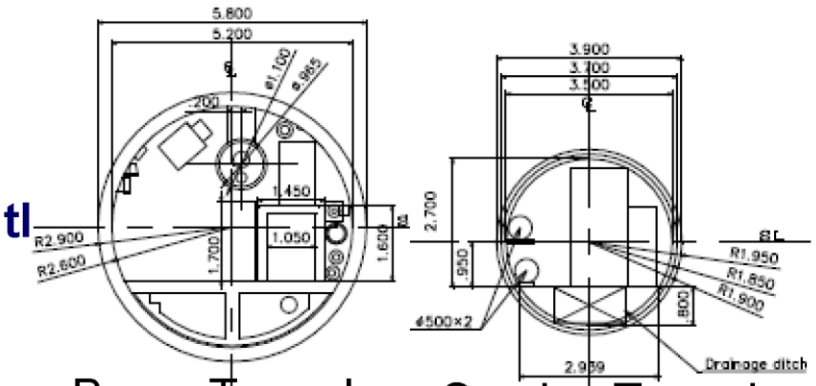

Beam Tunnel Service Tunnel

CASE-4《JS-T-K》 - Single Tunnel - TBM - KCS System

■ Layout Plan by the KCS RF System

- Cross Section of the Beam Tunnel is planed at the Same Size of KCS's Tunnel.
- Access Hall is the Biggest Cavern in order to Install the Equipment like a Klystron.
- Access Hall is Arranged at intervals of within 2.5 km on the Main Linac Tunnel.

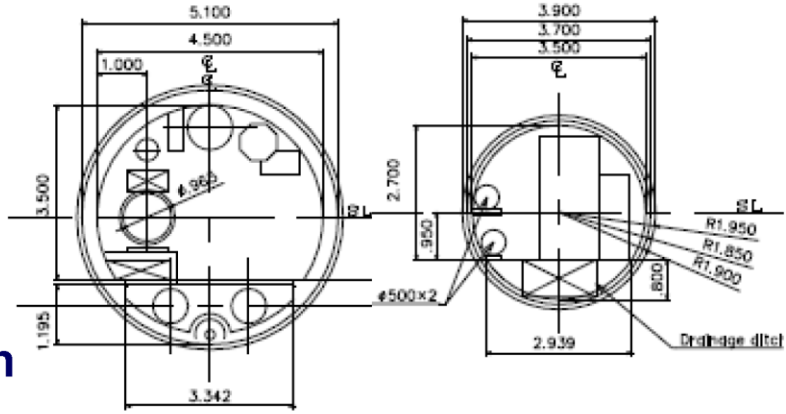

Beam Tunnel Service Tunnel

Outline of Case Model (4)

CASE-7《S-N-D》 - Single Tunnel -NATM - DRFS System

■ **Single, Large Tunnel Version by NATM**

- Partition Wall (0.4 m) Separated the Beam Line and RF Zone, Protects the Electronic Devices from Radiation.
- Trench Under the Floor is used as a Groundwater Drainage Canal.
- BDS & DR Tunnel will be constructed by NATM

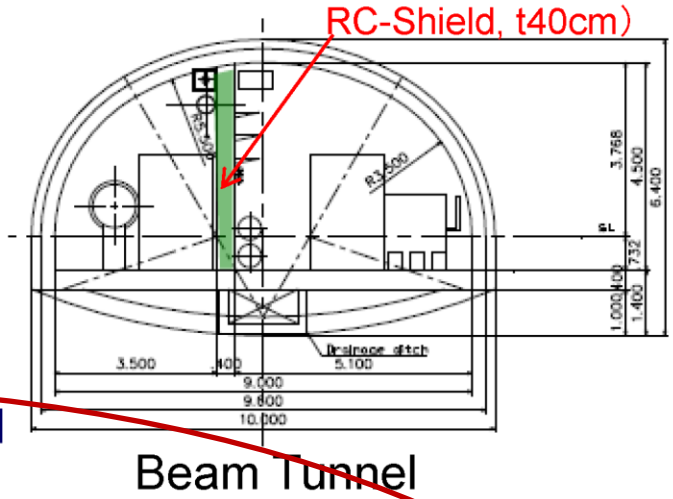

Beam Tunnel

CASE-8《wS-N-D》 - Single Tunnel -NATM - DRFS System

■ **Improved Version of Case-7**

- RC-Shield Wall of 3.5 m thickness Protects the Person in the RF Zone from Radiation.
- It is not Necessary to Arrange the Local Cavern (Machine Room) for Air-Conditioning and Cooling Water Supply.
- Refuge Path

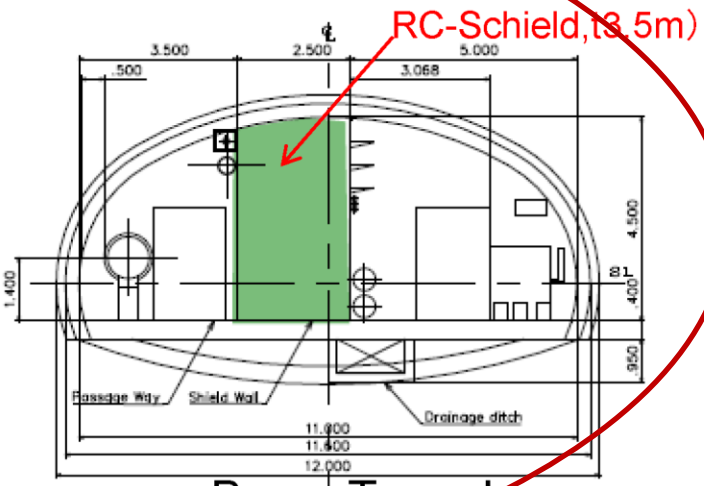

Beam Tunnel

Construction Schedule

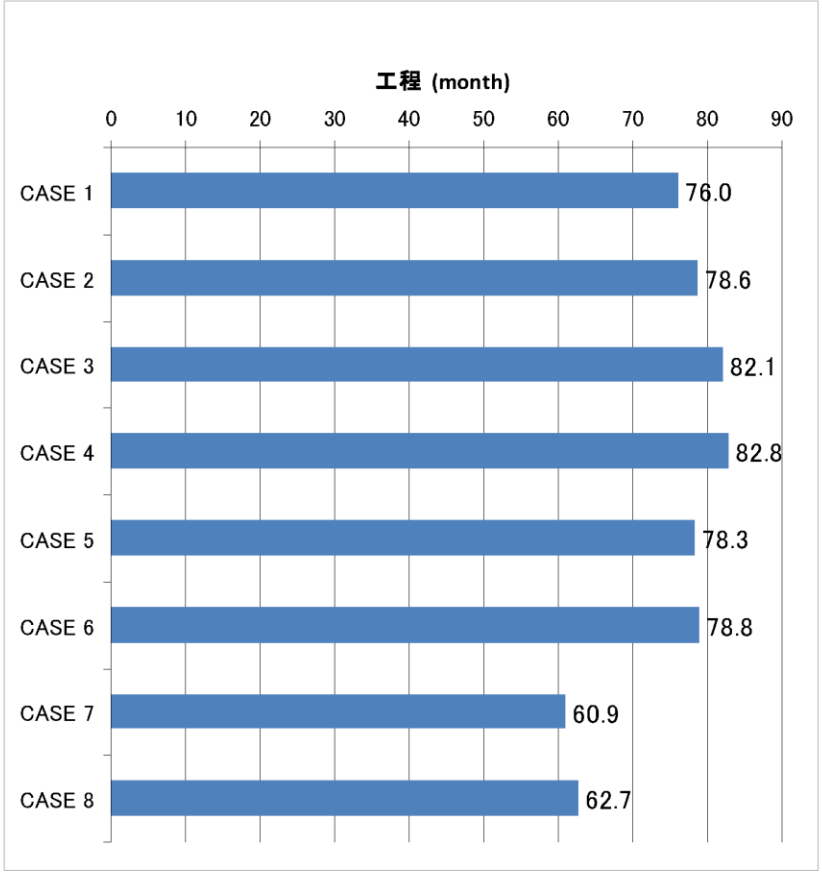

- The detail of construction schedule is shown in P18~25 of the case studies report.

Adapting the RDR linac to specific sites - Outline

1. **Linac Tunnel studies in each Region**
   - Key issues: Cost and HLRF
2. **Optimization of the mountain-topography site tunnel shape and construction technique**
   - Return to the double-enclosure high-power klystron (RDR) scheme: Distributed Klystron System
3. **High Level RF**
4. **CFS reviews and preparation for the TDR.**

Geological Investigation : Multiple Candidate-Sites

2004

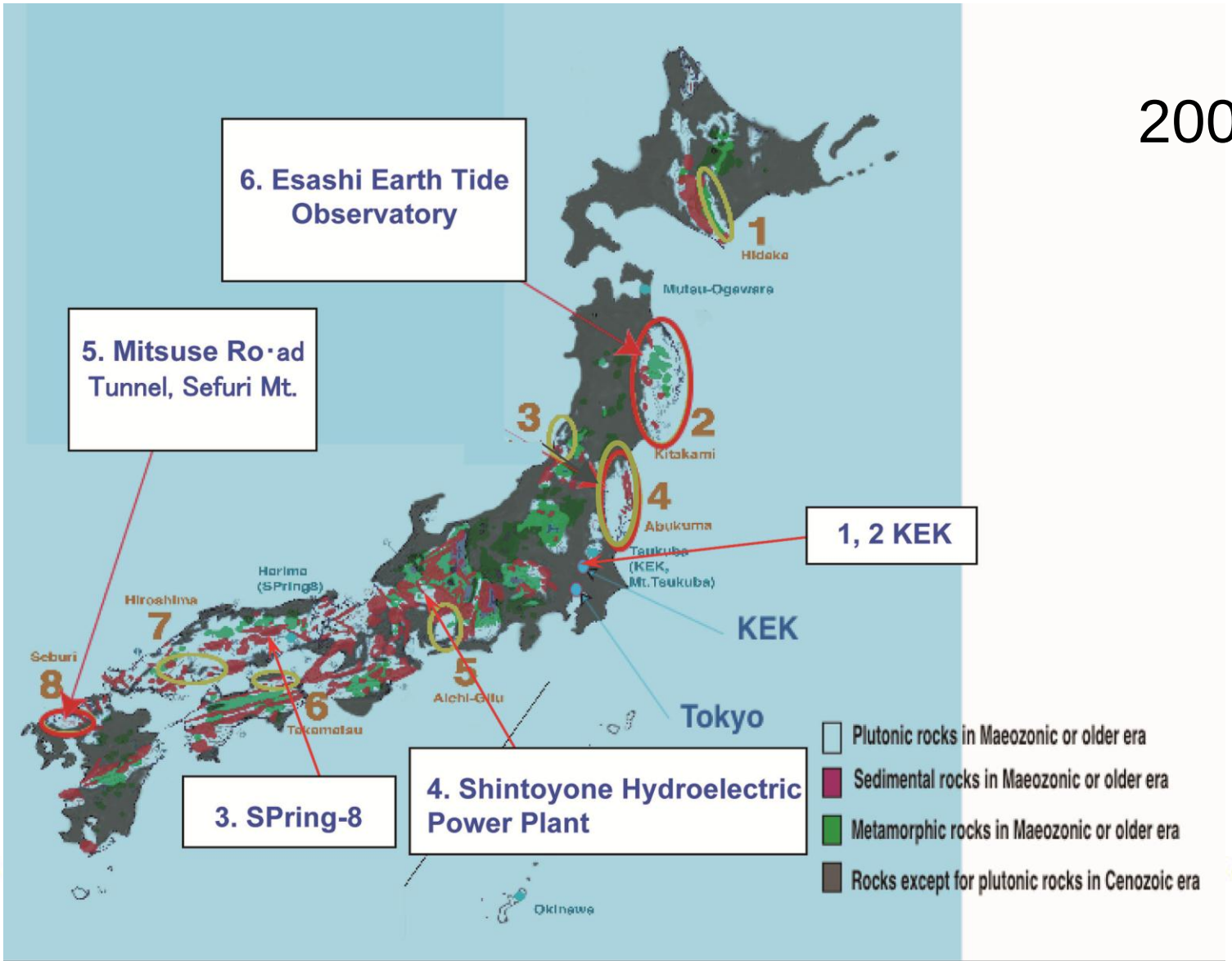

West Japan
- Sefuri

North Japan
- Kitakami

Typical tunnel section

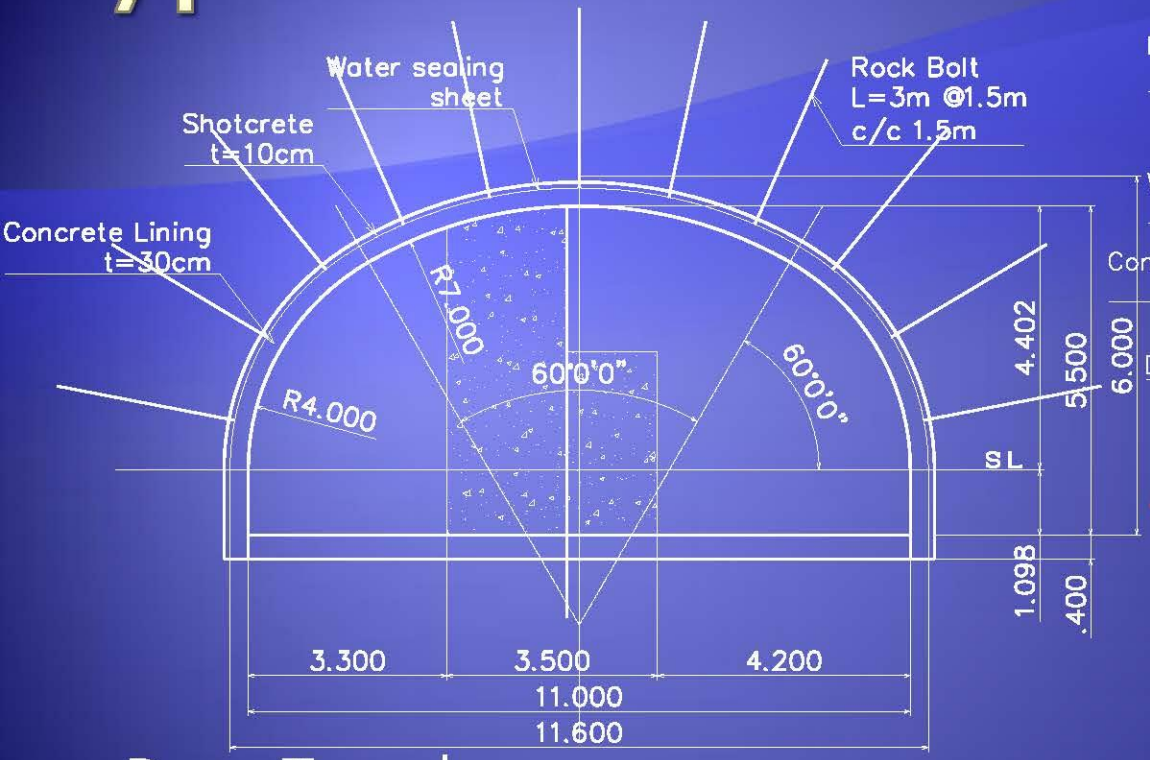

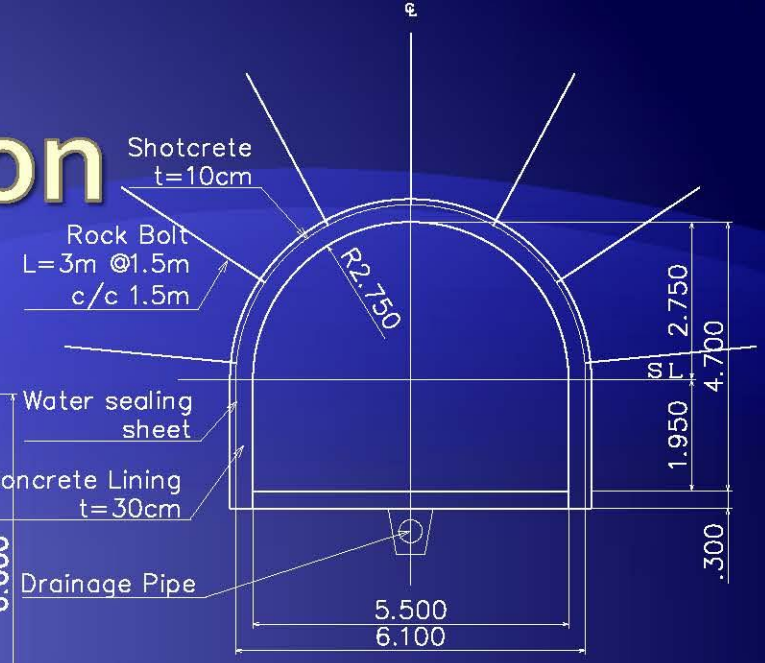

- Damping Ring Tunnel (arc part)

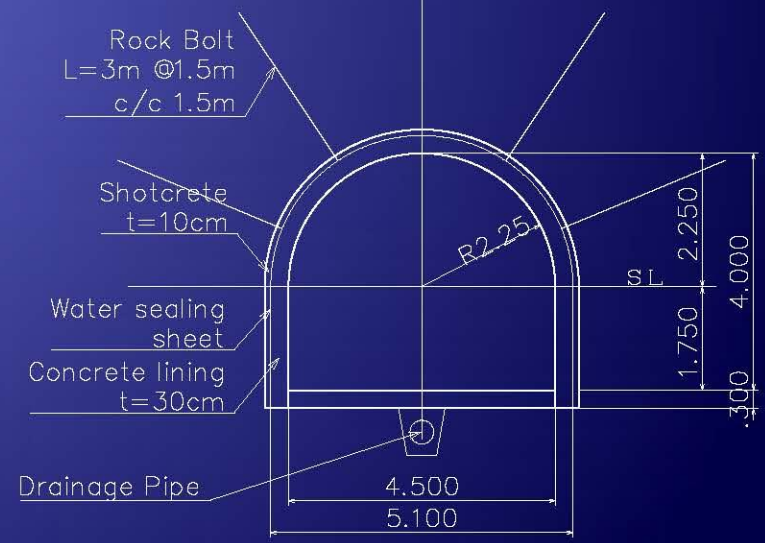

- Beam Tunnel
- Damping ring tunnel (straight part)

Shape is called Kamaboko

- RTML part of Beam Tunnel

KAMABOKO TUNNEL

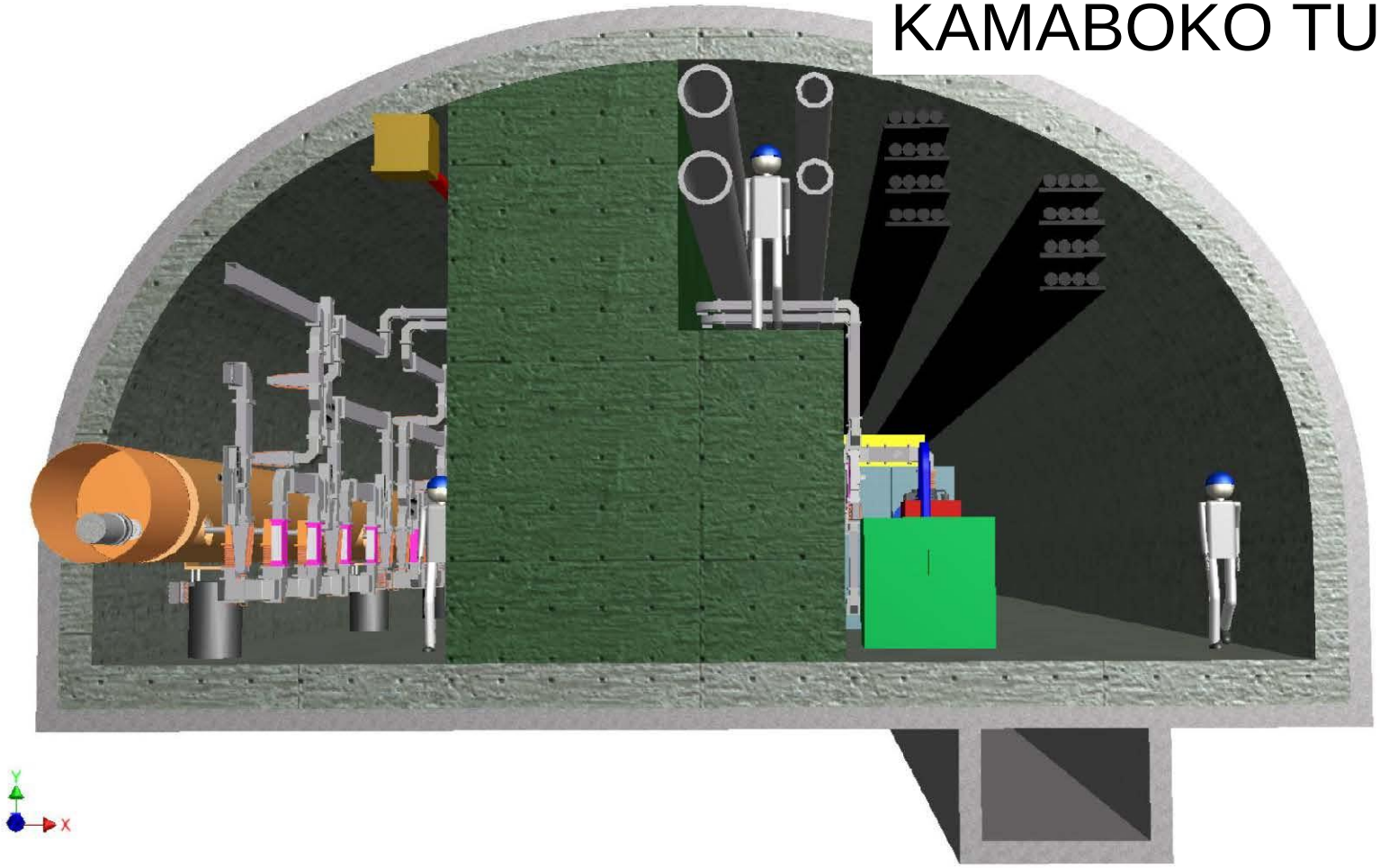

Access Hall & Access Tunnel

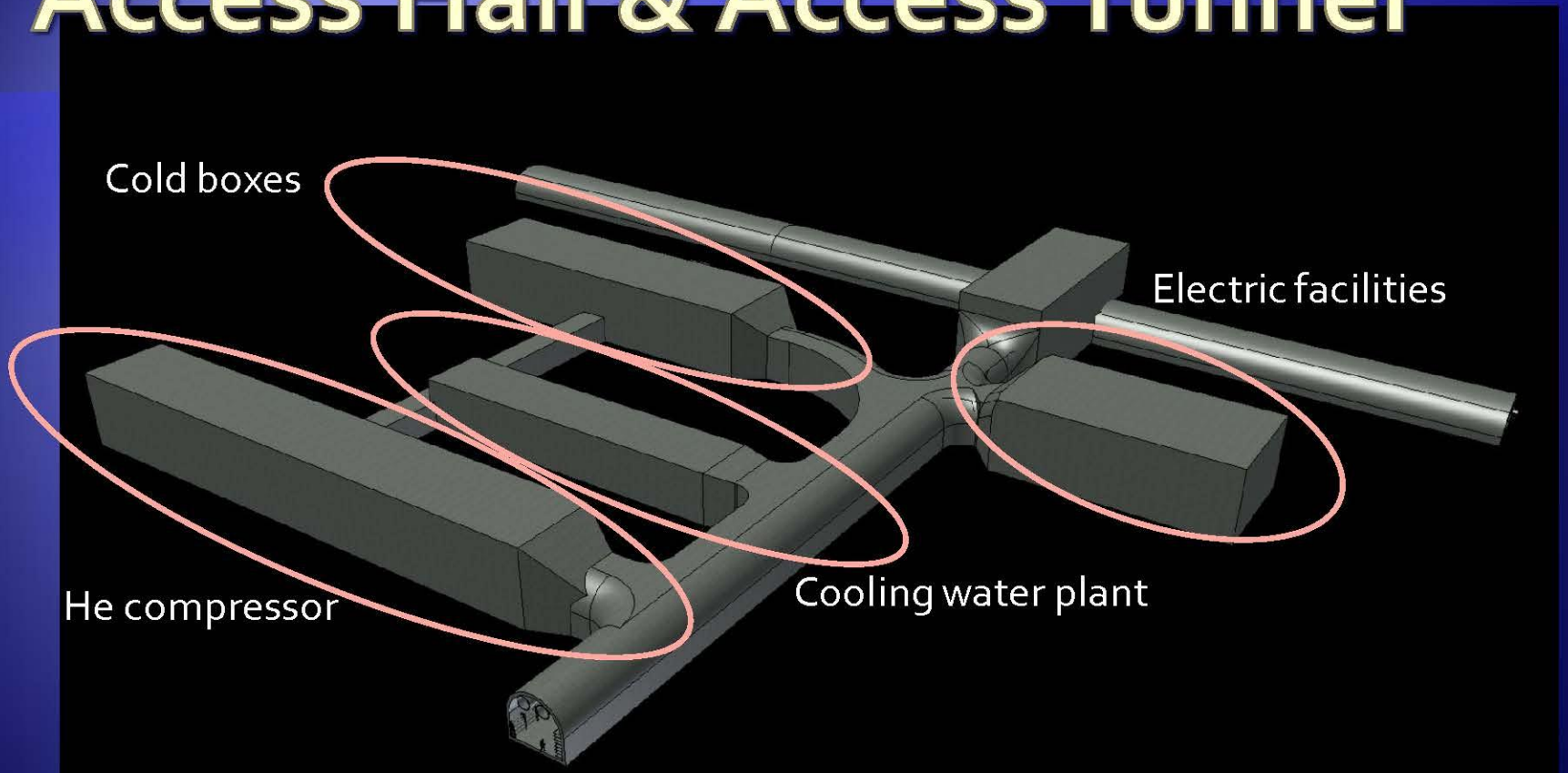

- Access hall consists of individual cavern
- Vibration source is installed away from beam line
- Cold boxes are near beam line

Dose Rate vs Bulk wall thickness

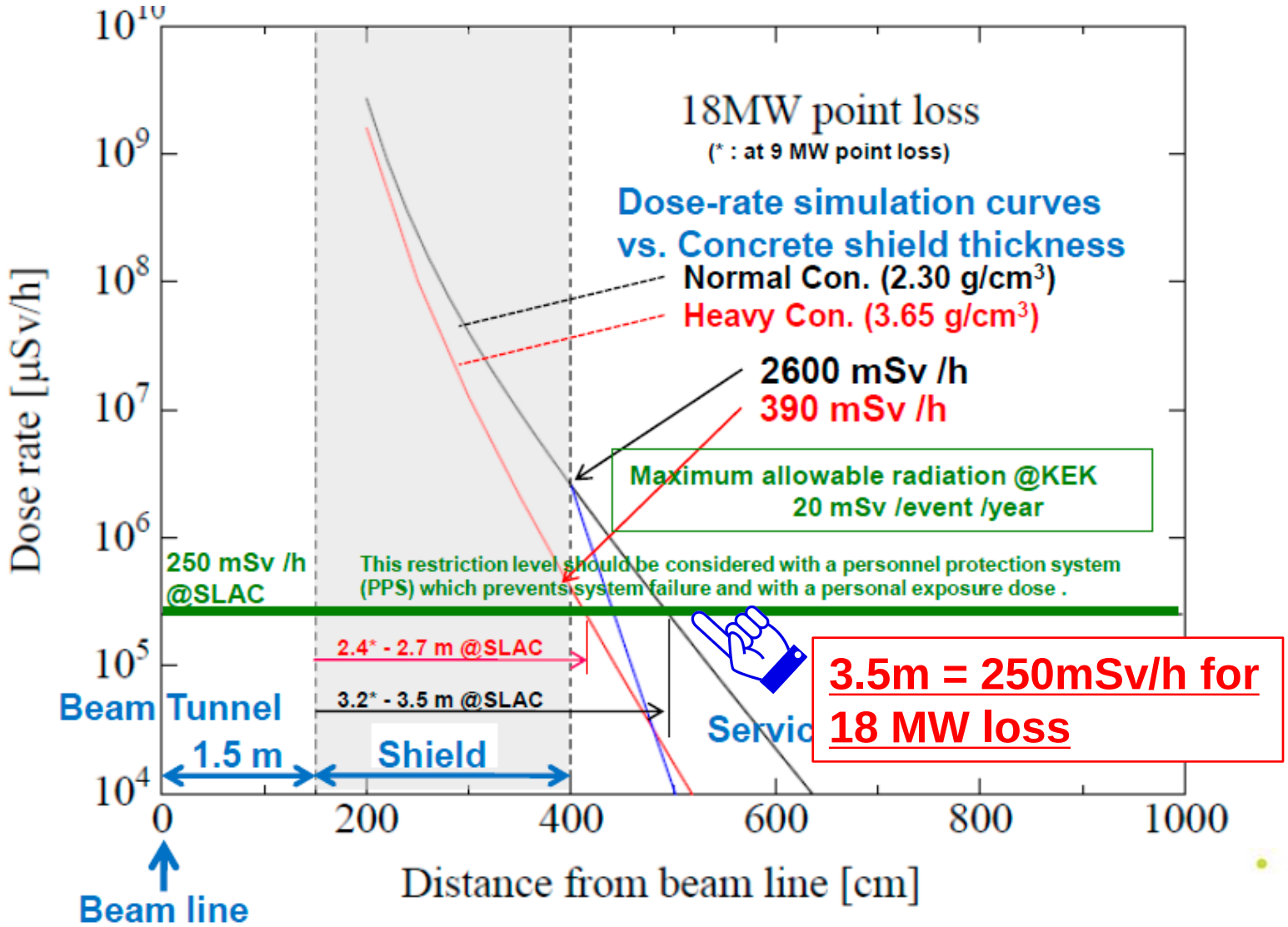

Adapting the RDR linac to specific sites - Outline

1. **Linac Tunnel studies in each Region**
   - Key issues: Cost and HLRF
2. **Optimization of the mountain-topography site tunnel shape and construction technique**
   - Return to the double-enclosure high-power klystron (RDR) scheme: Distributed Klystron
3. **High Level RF**
4. **CFS reviews and preparation for the TDR.**

DRFS klystron cost

To be effective: DRFS klystron must cost ~ 10x less than 10 MW multi-beam klystron (RDR)

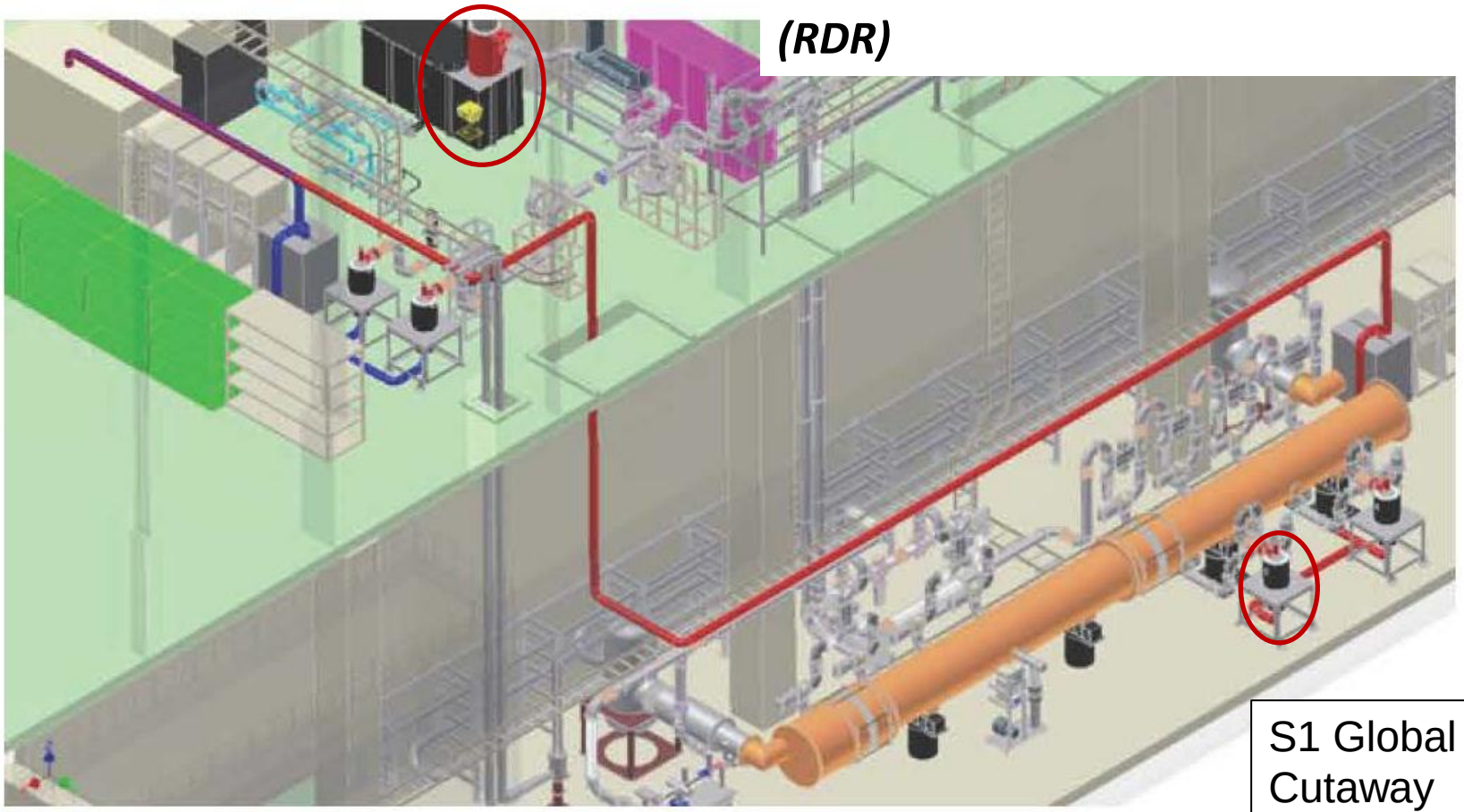

S1 Global (KEK) Cutaway schematic showing both klystrons

RDR 10 MW klystron fits to Kamaboko Tunnel and has cost advantage.

Old RDR Power Distribution System

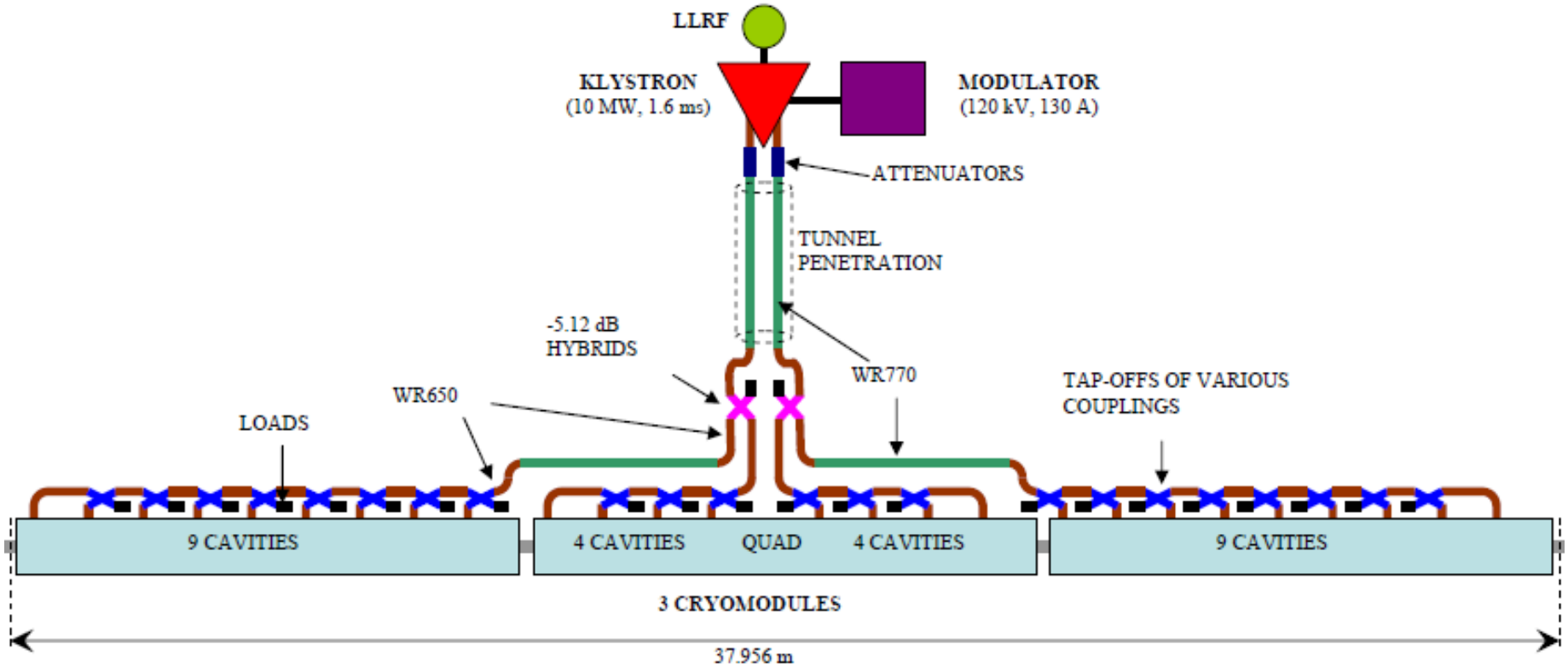

Installing an 8-cavity cryomodule:

XFEL prototype cryomodule with local waveguide distribution attached

XFEL CM power feed

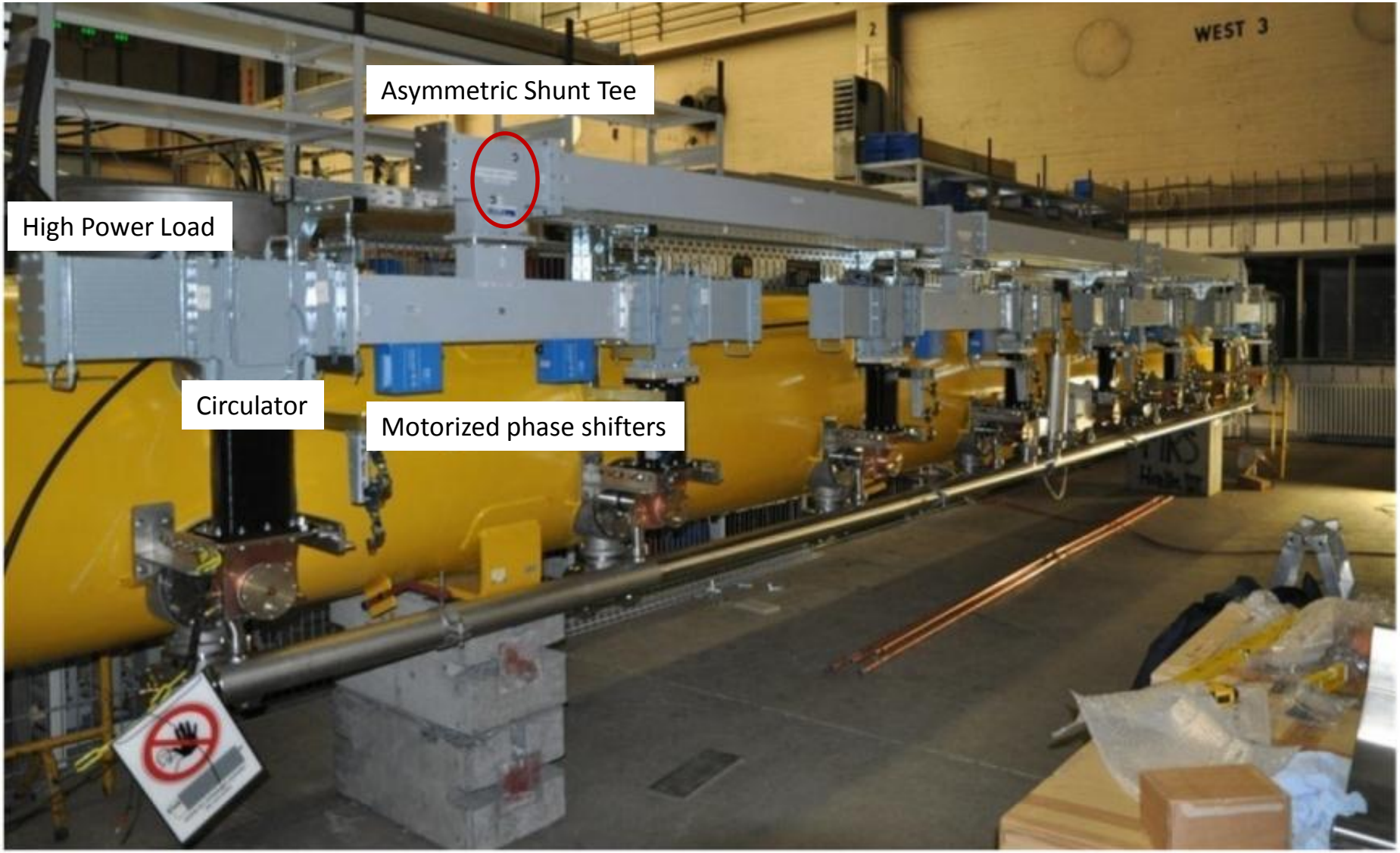

BCD RF Waveguide Components

3 Stub Tuner (IHEP, Bejing, China)

Changing phase, degree	÷60
Impedance matching range	$1/3Z_w$ @$3Z_w$
Max power, MW	2

* Z_w – waveguide impedance

E and H Bends (Spinner)

Circulator (Ferrite)

Type	WFHI 3-4
Peak input power, MW	0.4
Average power, kW	8
Min isolation at 1.3 GHz, dB	>30
Max insertion loss at 1.3 GHz, dB	≤0.08
Input SWR at 1.3 GHz (for full reflection)	1.1

Hybrid Coupler (RFT, Spinner)

Directivity, dB	>30
Return loss, dB	>35
Coupling factor, dB (due to tolerance overlapping only 13 different coupling factors instead 18 are necessary)	12.5; 12.0; 11.4; 10.7; 10.1; 9.6; 9.1; 8.5; 7.8; 7.0; 6.0; 4.8; 3.0
Accuracy of coupling factor, dB	÷0.2

RF Load (Ferrite)

Type	WFHLL 3-1
Peak input power, MW	1.0
Average power, kW	0.2
Min return loss at 1.3GHz, dB	32@40
Max VSWR at 1.3 GHz	≤1.05
Max surface temperature, ΔT °C (for full average power)	50

RF Load (Ferrite)

Type	WFHL 3-1	WFHL 3-5
Peak input power, MW	2.0	5.0
Average power, kW	10	100
Min return loss at 1.3 GHz, dB	32÷40	32÷40
Max VSWR at 1.3 GHz	<1.05	<1.05
Max surface temperature, ΔT °C (for full average power)	20	30
Physical length, mm	385	850

Main Linac Integration: Impact on HLRF

CM - Cavity Gradient / CM Testing:

- **RDR / TDR: Test only 1/3 CM**
- **TDP: prediction of CM gradient unreliable for ~20% cavities**
- **Sorting is not viable until above is resolved**
- **Single Cavity controls required**

Local Power Distribution:

- **Cavity 1) Input Power, 2) Phase and 3) Loaded_Q to be mechanically adjustable**
- **Gradient Spread requires all three**

1st Local Power Distribution System for NML (PDS1)

- Utilizes VTO (Variable Tap-Off) manually adjustable power dividers to customize split among cavity pairs.
- Currently in use on Fermilab's first NML cryomodule.

Local PDS Cavity Feed Details

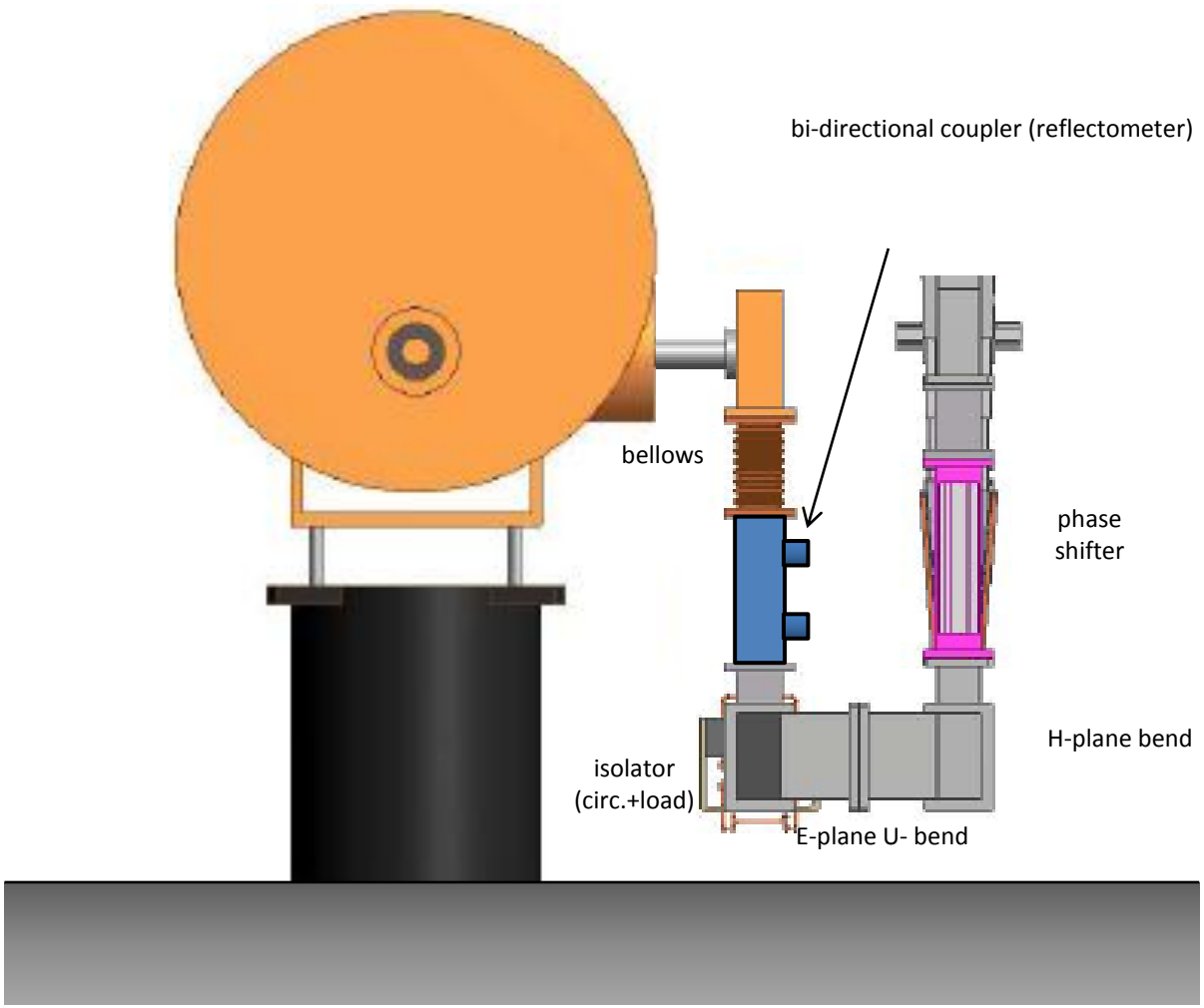

Phase Shifter for Local Power Tailoring

Assembly incorporating
2 phase shifters + 2 hybrids
can replace VTO.

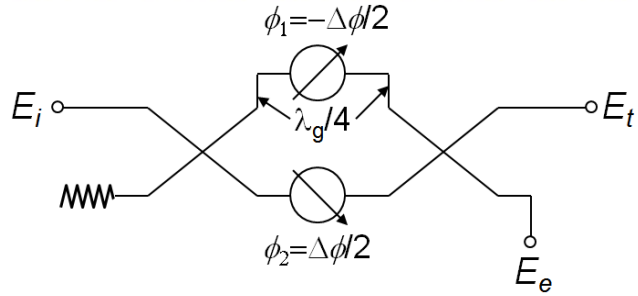

$$E_e = e^{i\left(\frac{f_1+f_2}{2}+\frac{p}{4}\right)} \sin\left(\frac{\mathrm{D}f}{2}+\frac{p}{4}\right)$$

$$E_t = e^{i\left(\frac{f_1+f_2}{2}-\frac{p}{4}\right)} \cos\left(\frac{\mathrm{D}f}{2}+\frac{p}{4}\right)$$

Phase shifter range of 0°–90°, the above arrangement allows <u>full range power division</u>.

If ϕ_1 and ϕ_2 are moved equally in opposite senses, the <u>output phases are unaffected</u>.

Pressurizable U-Bend Trombone Phase Shifter

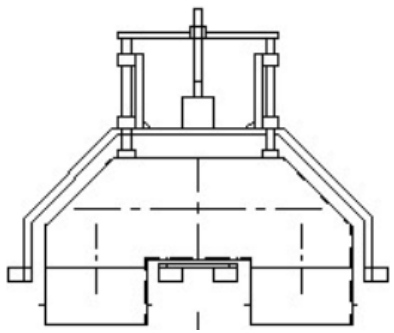

cold tests:

transmission: -.03–.01 dB

reflection: -50–36 dB

high-power test:

No breakdown in 8 hours at ~2 MW in 1bar N_2.

combine with

Folded Magic-T

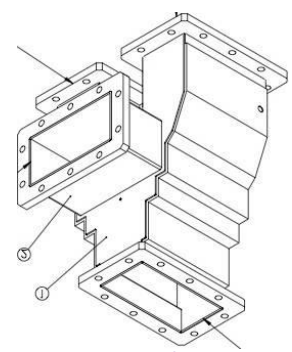

Mega Industries

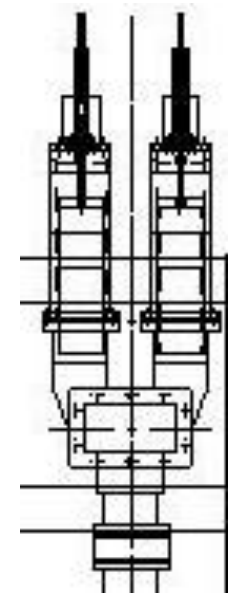

BENEFITS:
- more compact longitudinally than VTO (for individual cavity feeding)
- motorizable for remote adjustment (crucial with cavity degradation)

Local PDS Circuit

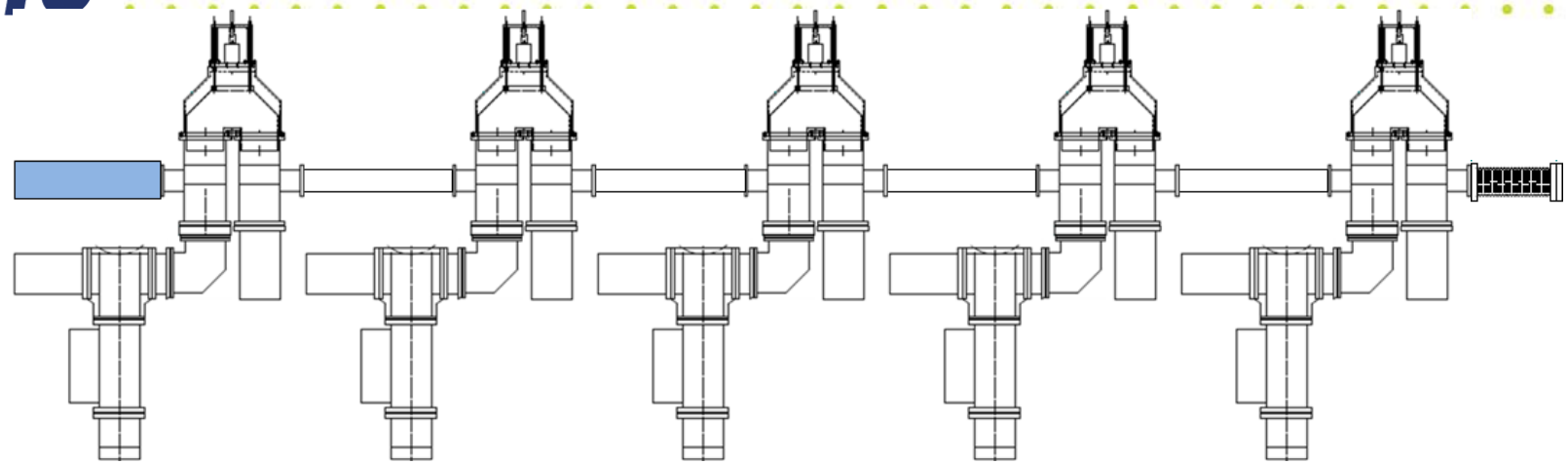

Use circulators and r.c. switches (as in combining circuit) respectively to shield KCS from reflections and, if necessary, to depower 1½ CM's.

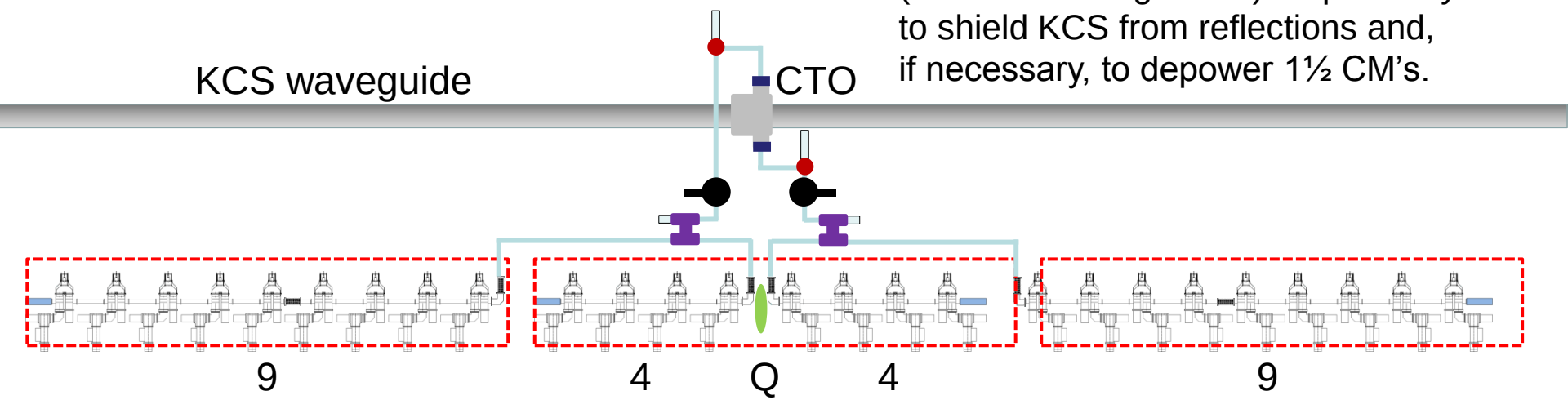

By splitting CTO outputs through asymmetric (-5.12 dB) "hybrids", as in the RDR, we can physically decouple cryomodules and limit variable coupler cascading.

Distributed Klystron System (DKS)

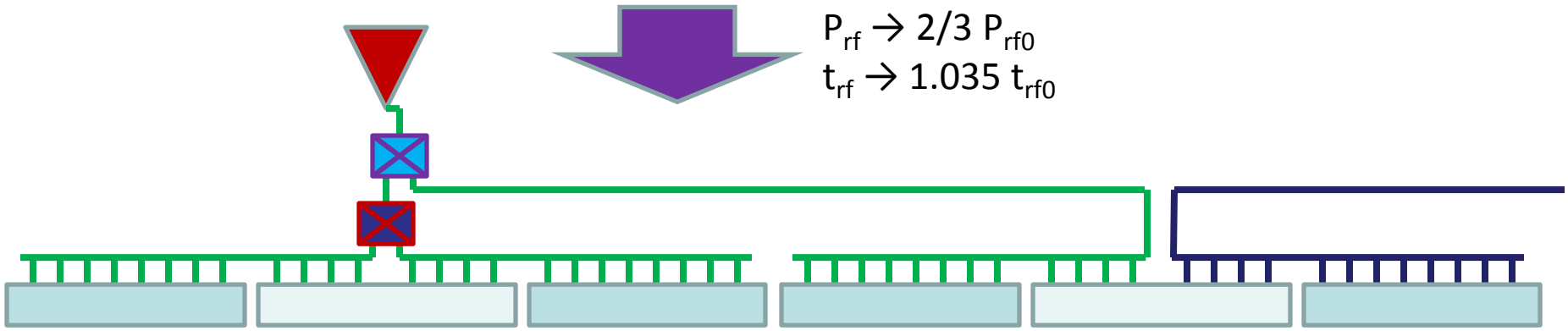

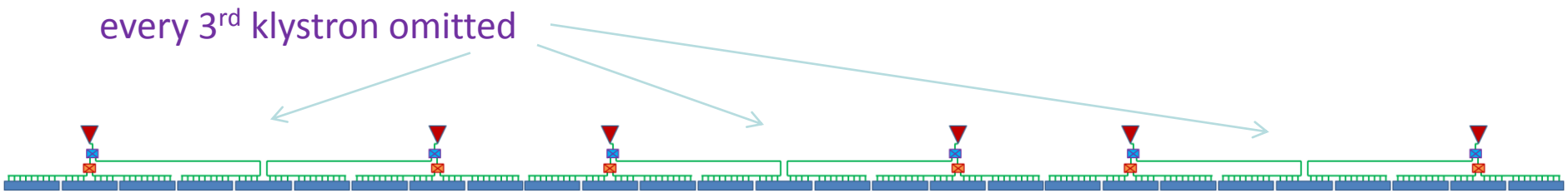

The beam pulse duration ($\propto n_B/I_b \rightarrow$ ½ / 2/3) is then shortened by a factor of ¾, and the fill time increased by a factor of 3/2, yielding an rf pulse width increase of only ~3.5%.

ILC BASELINE Local Power Distribution System (PDS) Layout*

variable power divider (VPD)

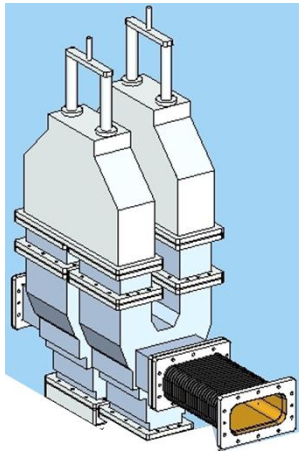

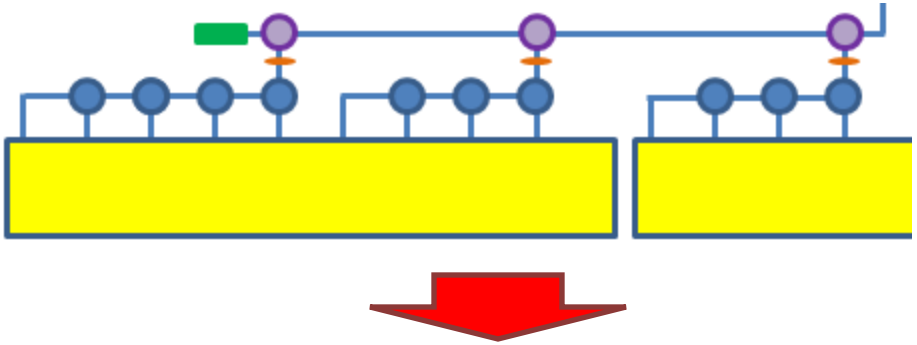

variable H-hybrid

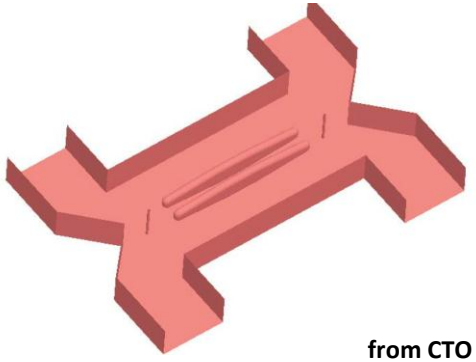

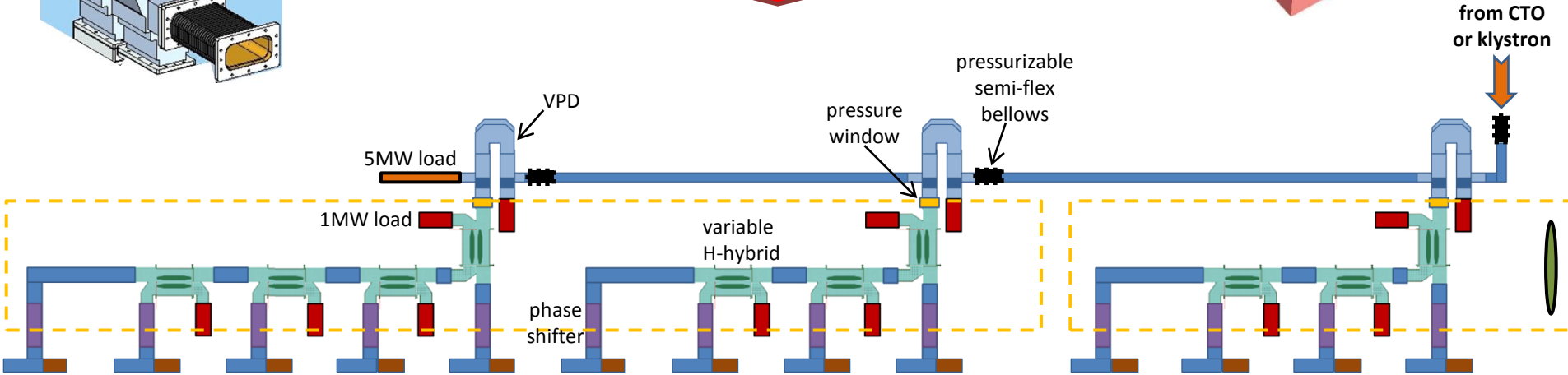

NOT SEEN:

circulator (except load)
bi-directional coupler (reflectometer)
bellows (unpressurizable)

*double for rf unit,
triple for DKS klystron feeding

KCS “Big Pipe” Waveguide Tests

0.48 m diameter, pressurized aluminum pipe resonantly powered to ~300 MW TE_{01} mode field equivalent in 1 ms pulses @ 5 Hz.

KCS Waveguide – 80 m test

Circular waveguide bend

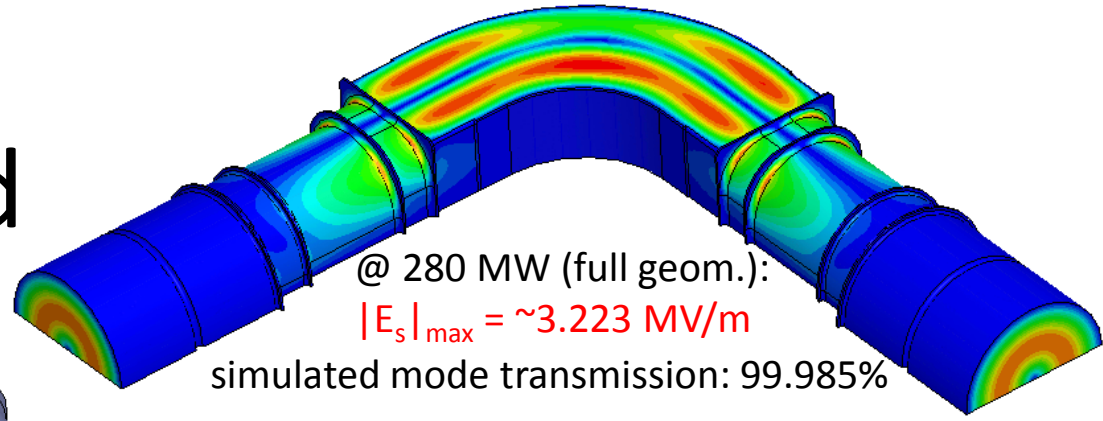

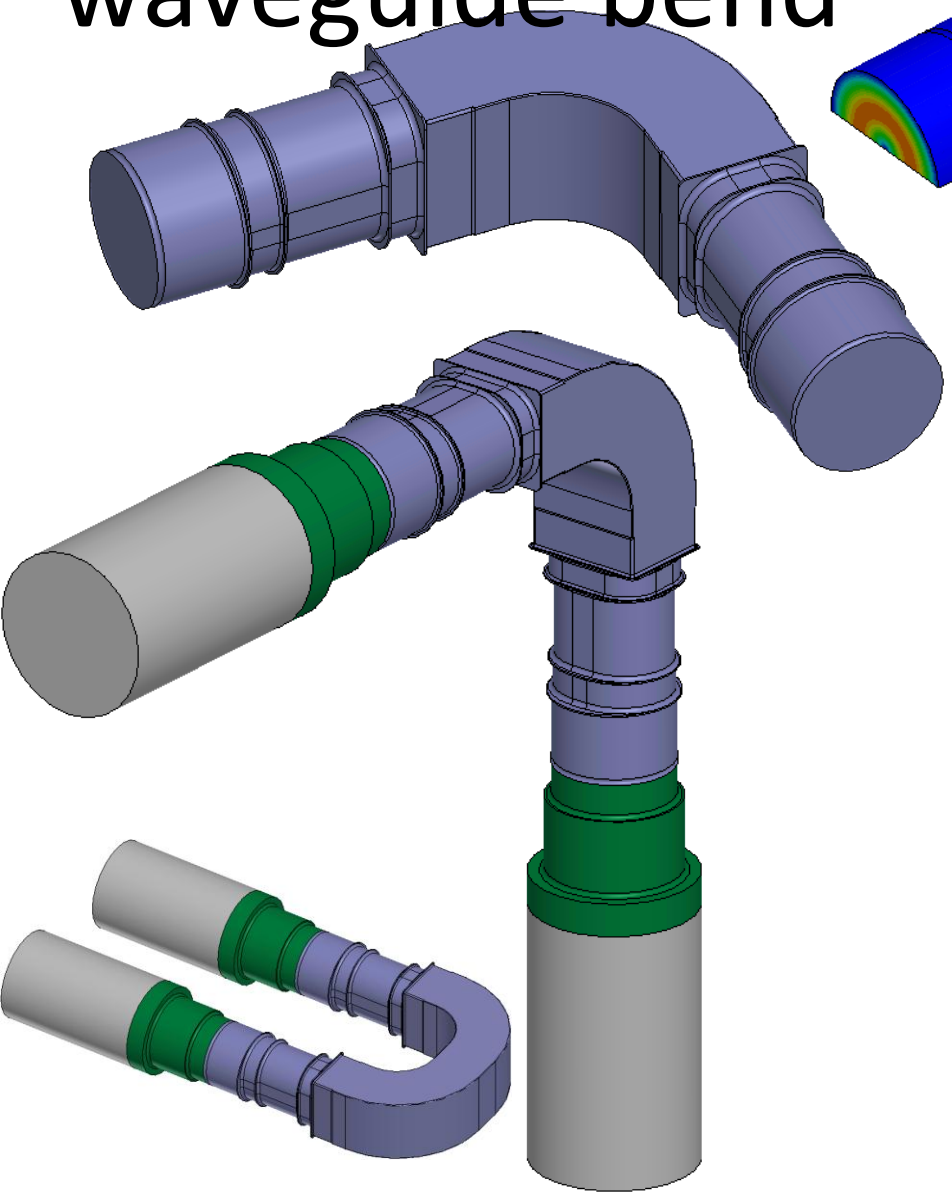

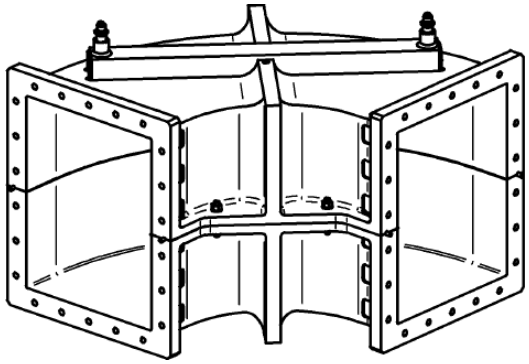

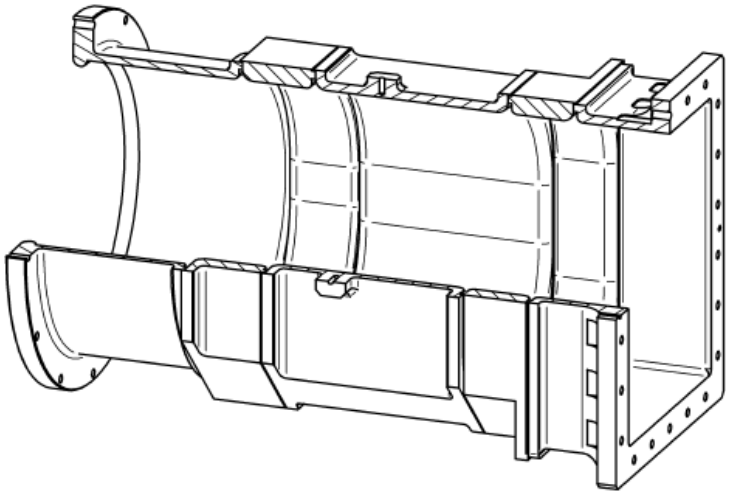

Adapting the RDR linac to specific sites - Outline

1. **Linac Tunnel studies in each Region**
   - Key issues: Cost and HLRF
2. **Optimization of the mountain-topography site tunnel shape and construction technique**
   - Return to the double-enclosure high-power klystron (RDR) scheme: Distributed Klystron
3. **High Level RF**
4. **CFS reviews and preparation for the TDR.**

Review of the International Linear Collider (ILC) Electrical and Mechanical System Design held at CERN on 21 March, 2012

The purpose of the Review is consider specified performance criteria and evaluate how the mechanical and electrical technical design solutions formulated by the ILC team address these. The ILC design is under development in parallel in each of three global regions. Conventional facilities (electrical and mechanical) design work from two of these, Asia (Japan) and Americas (US) will be presented. It is not the intention of the review to directly compare and contrast these two with each other. At the review, representatives from the Asian Region will present the Mechanical and Electrical Designs that have been developed using the Asian Region High Level RF (HLRF) system suitable for a mountain site in Japan and representatives from the Americas Region will present the Mechanical and Electrical Designs that have been developed using the Klystron Cluster RF system suitable for the Americas Sample Site.

The Review Panel will produce a report to the GDE Project Management that records panel impression and comments of the designs presented as well as conclusions reached during discussion periods.

The ILC high – power superconducting linac presents new and interesting technical challenges that are sure to be interesting.

Review of the International Linear Collider (ILC) Electrical and Mechanical System Design held at CERN on 21 March, 2012

The review panel will consist of:

Marc Ross (Fermilab – ILC) Chair
Vic Kuchler (Fermilab – ILC)
John Osborne (CERN – ILC) Host
Atsushi Enomoto (KEK – ILC)
Philippe Lebrun (CERN)
Mauro Nonis (CERN)
Francois Duval (CERN)

CFS Topics for further study (1):

- Marx modulator (accepted as baseline 02.2012)
- He Tank capacity (cryo-gas storage capacity)
- Survey / Alignment Criteria
- Experimental hall civil construction (review held 25 April)
- Service tunnel function
- Technical equipment backup power requirements
- Electrical Load table including conventional →
- Compressor / Marx modulator feed at high voltage
- Marx power factor / central region power factor

Electrical Load Table Not Complete

(Actual usage – except for emergency)

RDR (w adjusted cryo Jan 27 2011)

n	RF Power	Conventional Power (operating power)			Emerg Power	Total
		Conv (incl racks)	NC Magnets	Cryo		
	1.05	2.46	0.73	**0.59**	0.06	4.89
e+sources	4.11	8.59	8.9	**0.59**	0.21	22.4
DR	14	2.38	7.92	**2.52**	0.23	27.05
RTML	7.14	5.12	4.74	0	0.15	17.15
Main Linac	75.72	23.40	0.78	**42.9**	0.404444	143.2
BDS	0	4.62	2.57	**0.41**	0.2	7.8
Dumps	0	3.83	0	0	0.12	3.95
IR	0	0	0	0	0	0
TOTALS	*102.0*	*50.4*	*25.6*	***47.0***	*1.4*	**226**

TDR baseline - Low Power (KCS)

Area System	RF Power	Conv	Racks	NC Magnets	Cryo	Emerg Power	Total
e-sources	1.05	1.02		0.73	**0.59**	0.16	3.55
e+sources	1.48	2.19		4.94	**0.59**	0.35	9.6
DR	8.67	1.84		2.97	**2.52**	0.14	16.1
RTML	3.78	0.12	0.32	1.26	0	0.14	5.6
Main Linac	66.1	8.10	5	0.914	**44.2**	4.58	129
BDS	0	0.24		10.43	**0.41**	0.28	11.4
Dumps	0	1		0	0	0	1
IR	0	0.09		0.58	1.324	0.17	2.2
TOTALS	*81.1*	*14.6*	*5.2*	*21.8*	*49.6*	*5.8*	**178**

Summary

TDR will integrate:

- **Basic technical design (and cost estimate)**
  - Beam dynamics, Cryogenic linac, Accelerator components
- **Flat-topography design**
  - CFS and HLRF (KCS)
- **Mountain-topography design**
  - CFS and HLRF (DKS)

Critical step toward strong project proposal