SCRF-ML Technology Industrialization

Public Report

Akira Yamamoto, Marc Ross, and Nick Walker
ILC-GDE Project Managers

Prepared for ILC-PAC Review, Fermilab, May 15-16, 2012

Outline

- **Introduction**
  - Scale of mass production
- **Technical progress**
  - Industrial cavity R&D
  - Pre-production in the EXFEL cavity industrialization
- **Progress in Communication**
  - Progress in studies contracted with qualified venders
- **Further study required**
  - Input power couplers production and aging
  - Cryomodule assembly and test
  - Industrialization model

Global Plan for SCRF R&D

Year	07	2008	2009	2010	2011	2012
Phase	TDP-1				TDP-2	
Cavity Gradient in v. test to reach 35 MV/m	→ Yield 50%				→ Yield 90%	
Cavity-string to reach 31.5 MV/m, with one-cryomodule		Global effort for string assembly and test (DESY, FNAL, INFN, KEK)			We are here	
System Test with beam acceleration			FLASH (DESY) , NML (FNAL) STF2 (KEK, test start in 2013)			
Preparation for Industrialization				Production Technology R&D		
Communication with industry:	1st Visit Venders (2009), Organize Workshop (2010) 2nd visit and communication, Organize 2nd workshop (2011) 3rd communication and study contracted with selected vender (2011-2012)					

Progress Integrated in Cavity Gradient Yield

Updated, April., 24, 2012

Plot courtesy
Camille Ginsburg of FNAL

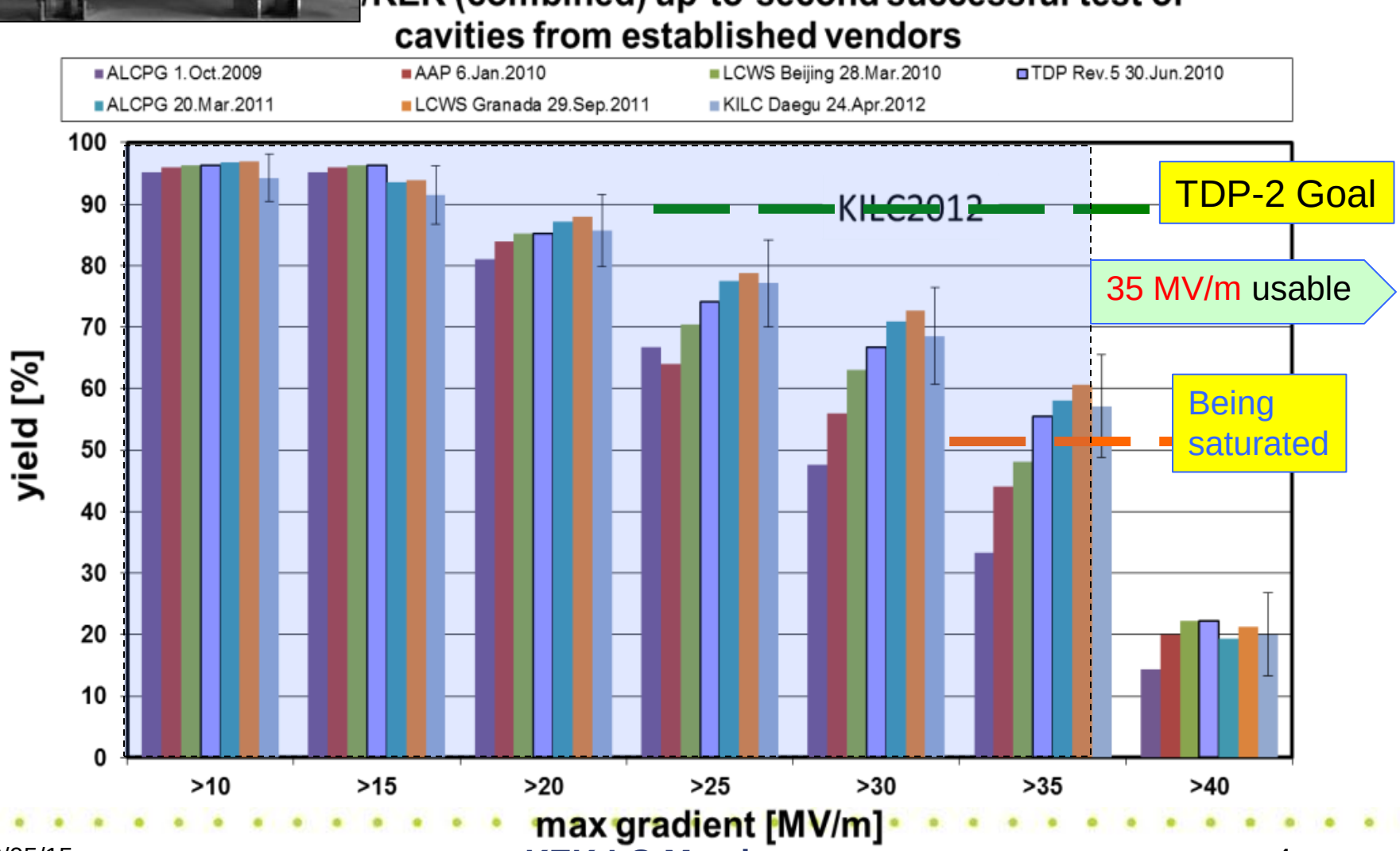

Yearly Progress in Cavity Gradient Yield

as of April 24, 2012

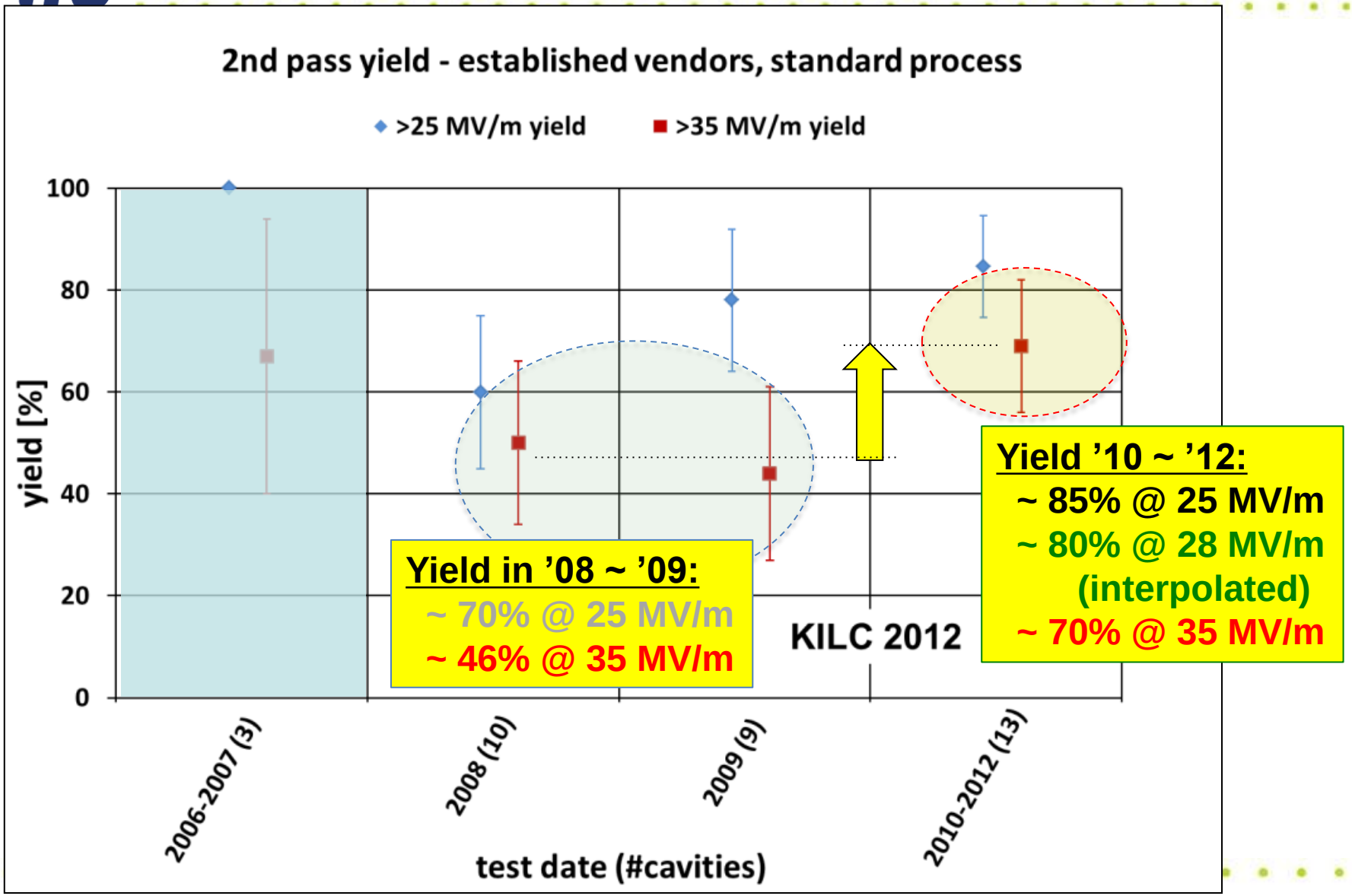

SCRF-ML Technology Required

RDR → SB2009

RDR Parameters	Value
C.M. Energy	500 GeV
Peak luminosity	2×10^{34} $cm^{-2}s^{-1}$
Beam Rep. rate	5 Hz
Pulse time duration	1 ms
Average current	9 → 6 mA (in pulse)
Av. field gradient	31.5 MV/m
# 9-cell cavity (including others)	**17,786 (~18,000)** (16,024 x 1.11)
# cryomodule (9+4Q4+9)	**1,855 + α (TBC)** (1855)

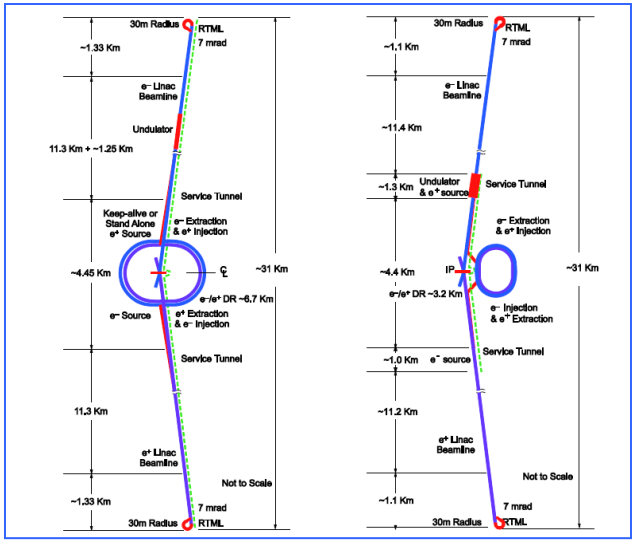

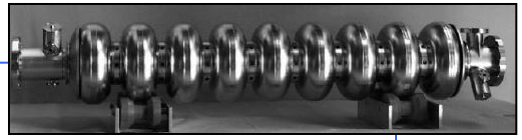

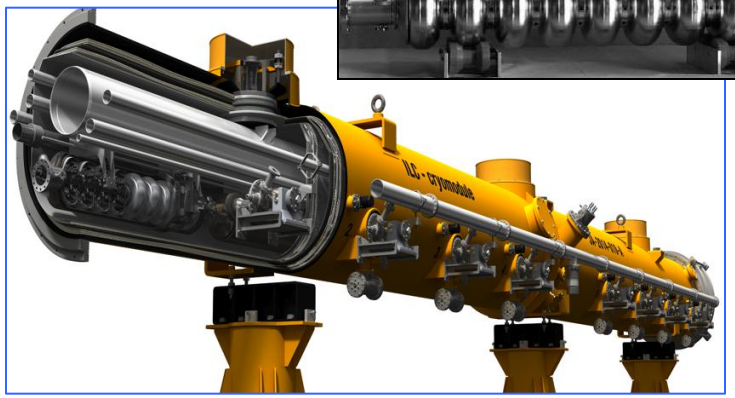

Cryomodule and Cavity Counts

EDMS

	C4Q4	C8Q2	C9	C8Q1	Cavities	Quad-PKG
Electron source						
5GeV booster			8	16	200	16
E compressor			1		9	0
Positron source						
5GeV booster	6	8		12	184	52
E compressor			1		9	0
RTML (electron)						
1st stage compressor				3	24	3
2nd stage			32	16	416	16
RTML (positon)						
1st stage compressor				3	24	3
2nd stage			32	16	416	16
Main linacs						
Positron			564	282	7332	282
Electron			570	285	7410	285
Totals	6	8	1208	633	16024	673

Industrial Participation to ILC Cavity Production

year	# 9-cell cavities qualified	# of Labs reaching 35 MV/m processing	# of Industrial manufacturers reaching 35 MV/m fabrication
2006	10	1 DESY	2 ACCEL, ZANON
2011	41	4 DESY, JLAB, FNAL, KEK	4 RI, ZANON, AES, MHI,
2012	(45)	5 DESY, JLAB, FNAL, KEK, Cornell and others joining soon	5 RI, ZANON, AES, MHI, Hitachi and others joining soon

- **Recent Progress in Industry/Lab**
  - Niowave-Roark/Fermilab (TB9NR004): reached 29.7 MV/m (Nov. 2011
  - Hitachi/KEK (HIT02): reached 35 MV/m with HOM (April, 2012)
  - Toshiba/KEK (TOS-02): reached 30 MV/m w/o HOM (March 2011)
  - Accel (RI)/Cornell (A9) : reached 39.5 MV/m w/ HOM (April, 2012)
- **Progress in EXFEL** (courtesy by D. Reschke: the 2nd EP at DESY)
  - RI: 4 reference cavities with Eacc > 28 MV/m, (~ 39 MV/m max.)
  - Zanon: 3 reference cavities with Eacc > 30 MV/m (~ 35 MV/m max.)

HIT-02(with HOM) : 1-st VT

It has many defects on several Iris and beam pipe, however, it went up 35MV/m.

April 26

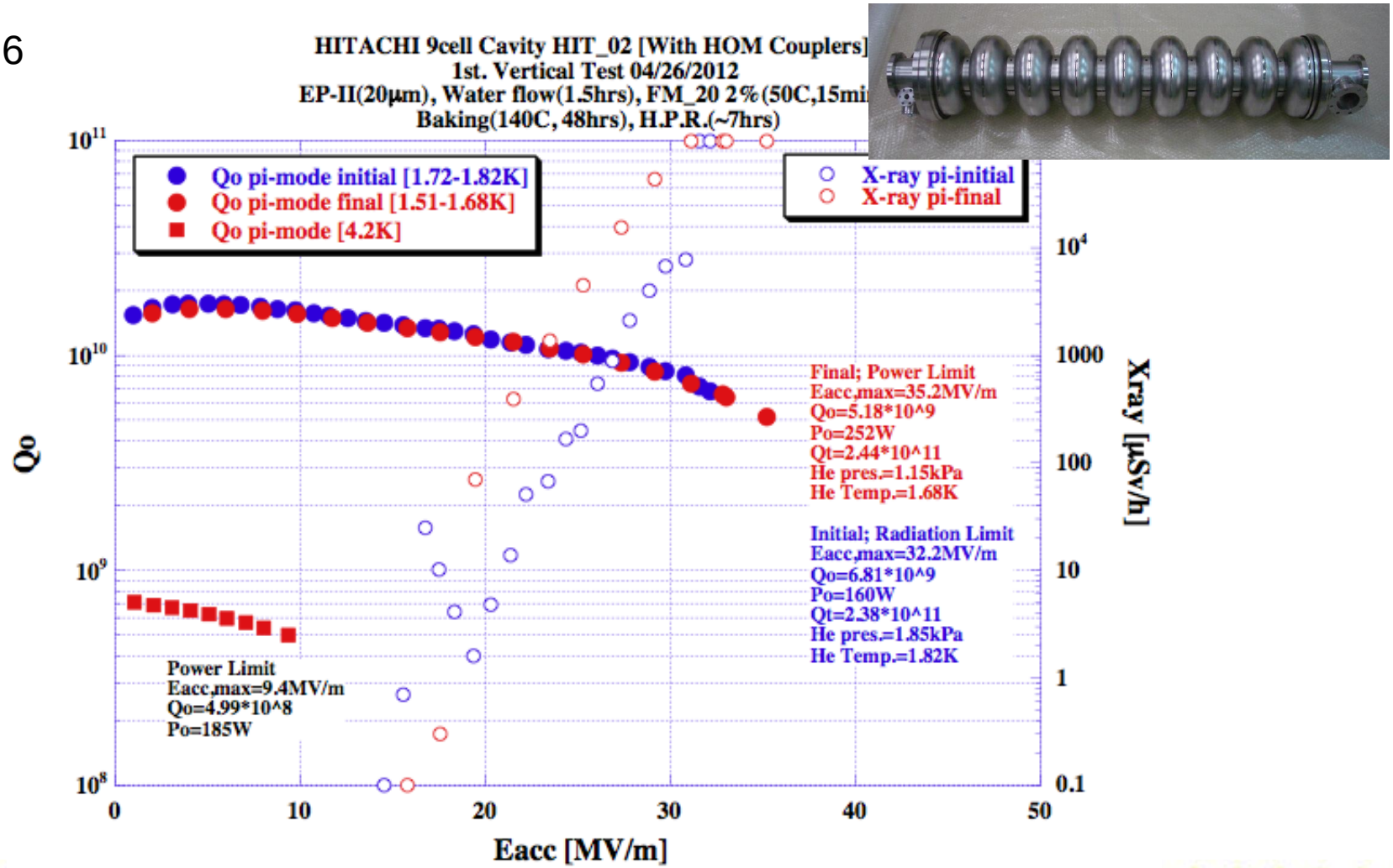

Cavity Fabrication realizing at KEK

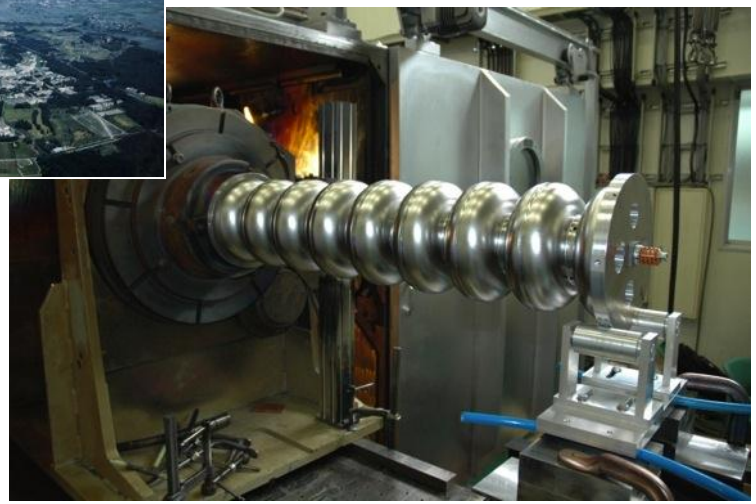

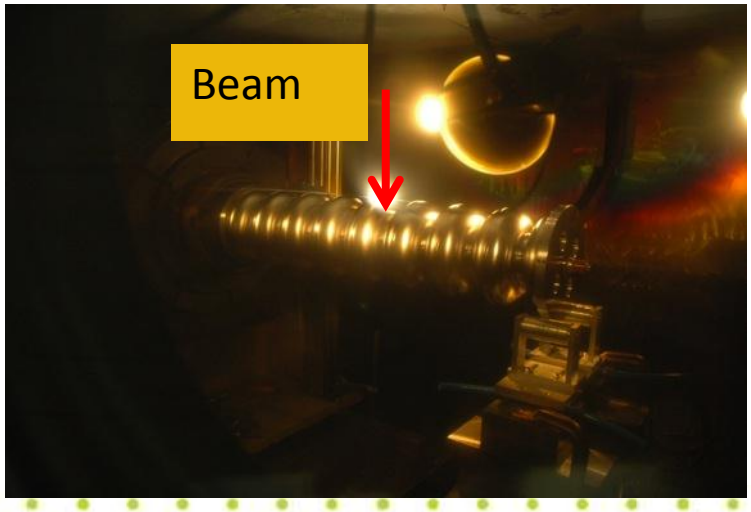

8 July 2011

KEK-00(w/o HOM) 2-nd VT

limited by cell#2 defects, other cells were over 40MV/m

April 5

EBW at TOSEI and KEK

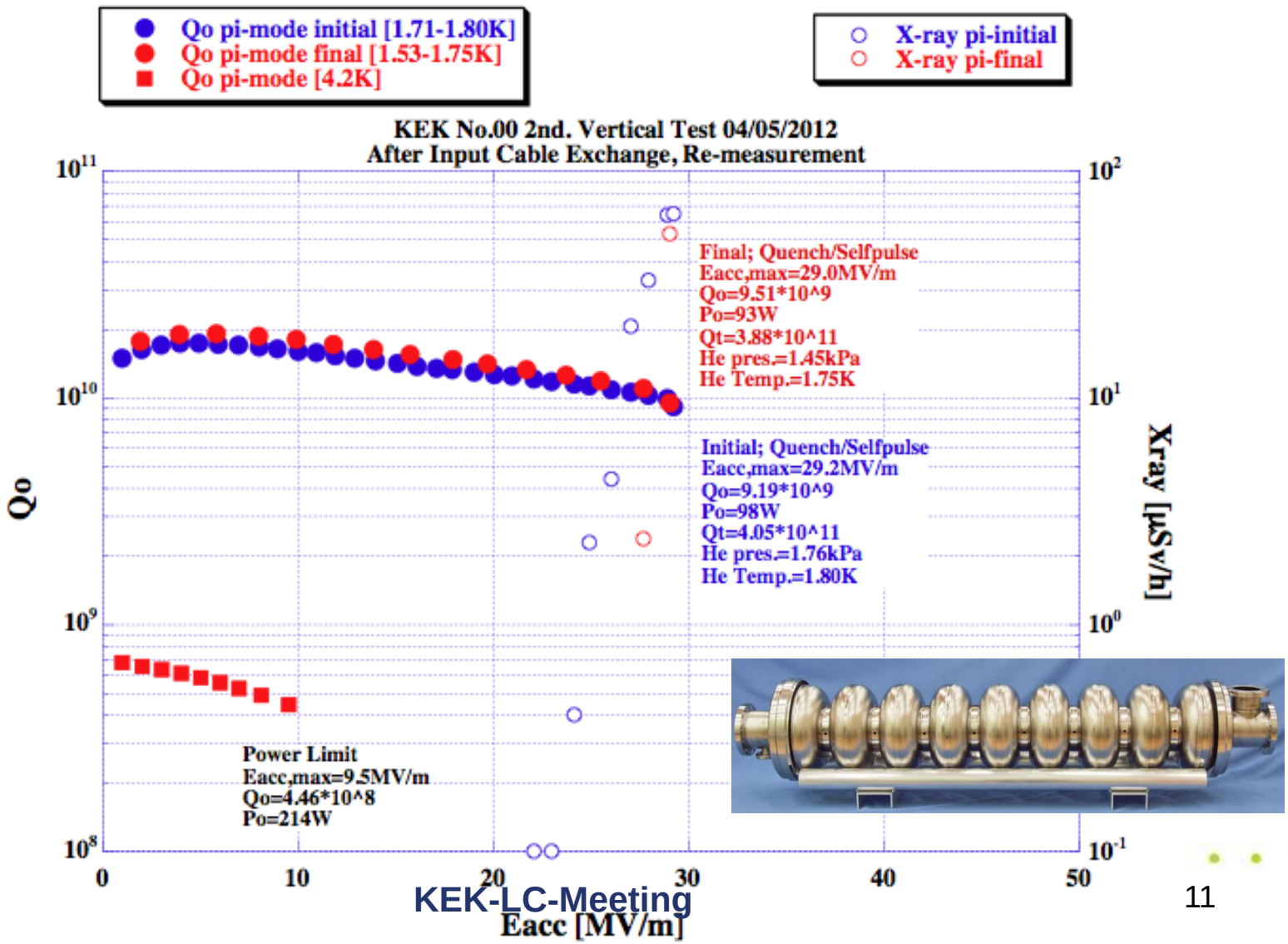

An Example: Study of Gun-Voltage Dependence

M. Yamanaka

Gun Voltage	150	90	120	60 kV
No.	1, 2	3, 4	5, 6	7, 8

V: 5 mm/s
WD: 500mm

Odd: **Lower Focus**
Even: Upper Focus

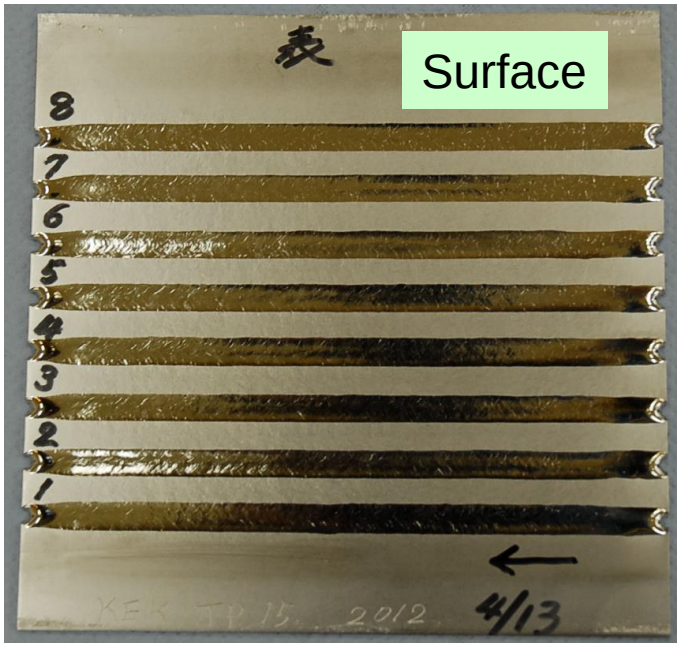

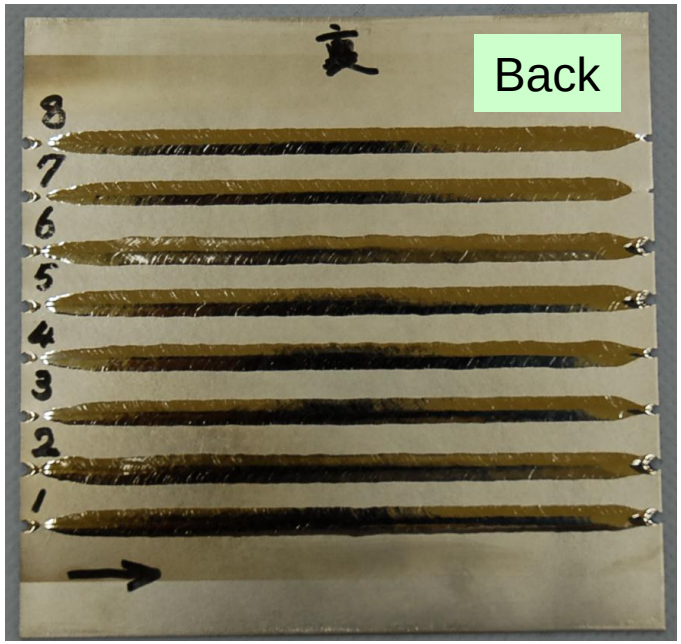

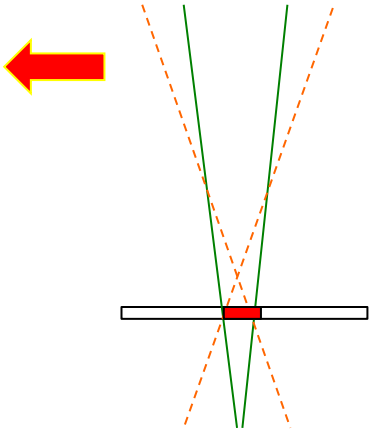

t: 2.6 mm

- **No. 7: Best scored by participants**
  - Welding profile: width: 6.6 mm (forward), 6.1 mm (back)

An Example:
Correlation of Voltage and Current

- Width v.s. Current
  - Parametering Voltage

- Width v.s. Power

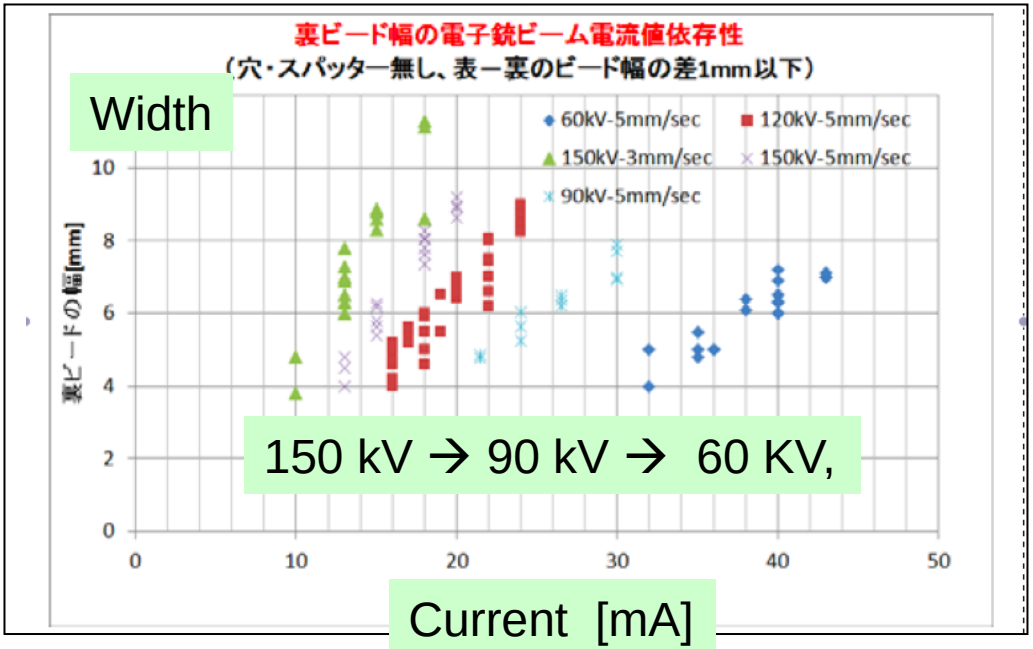

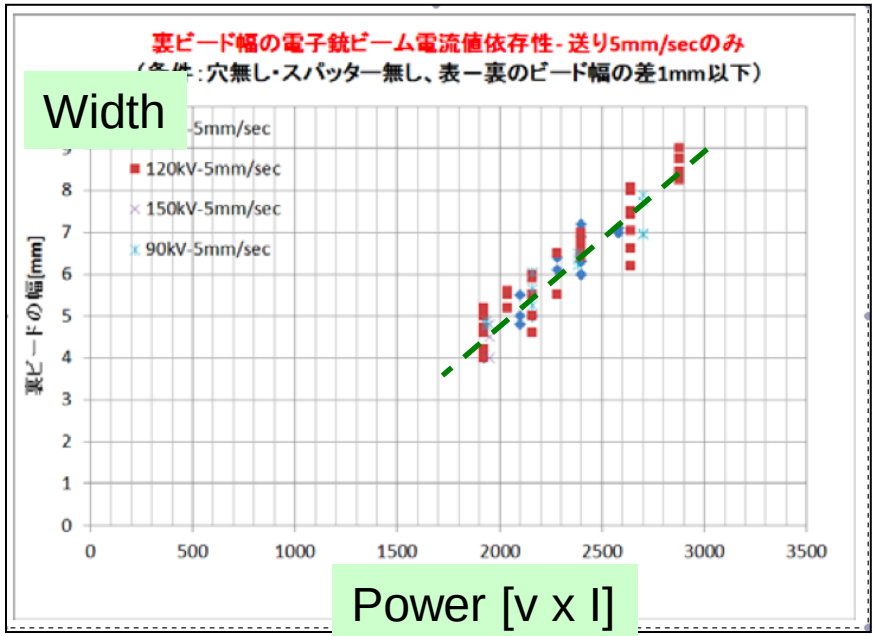

Learning: Power (V x I) is an important parameter.
Voltage is not a critical parameter for a thickness of 2.6 mm

Plug-compatible Conditions

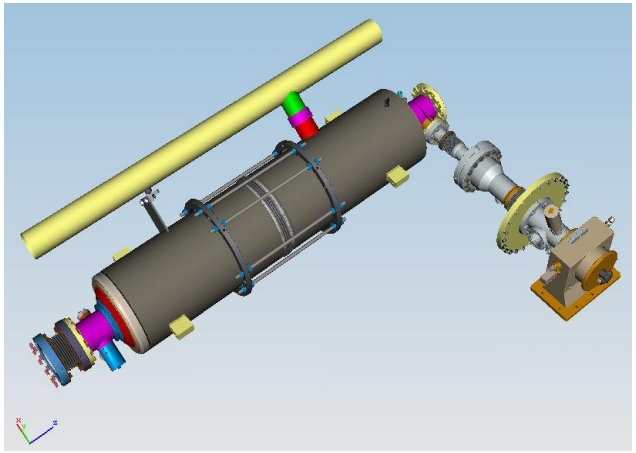

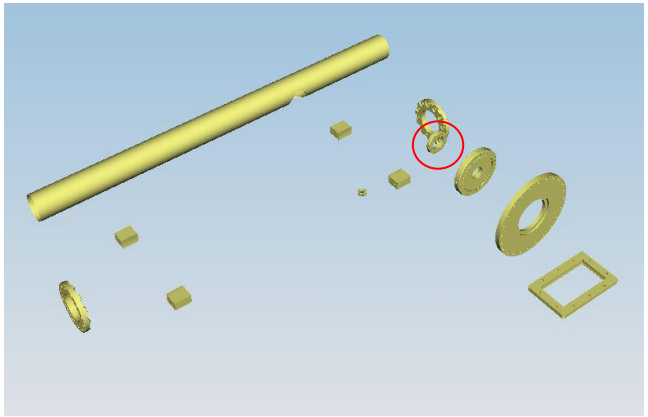

Item	Selection	Plug-comp.
Cavity shape	TESLA / LL	TESLA
Length		Fixed
Beam pipe flange		Fixed
Suspension pitch		Fixed
Tuner	Blade/ Slide-Jack	Blade
Coupler flange (cold end)	40 or 60	40 mm
Coupler pitch		Fixed
He –in-line joint		Fixed

Plug-compatible interface established

Blade Tuner selected

Blade Tuner (originated by INFN)

Slide-jack tuner at KEK

EXFEL tuner

Cavity Deliverable

assuming EXFEL cavity specification

Courtesy: W. Singer

- **From EXFEL specification: 02L BQM-Cavity in He Tank**

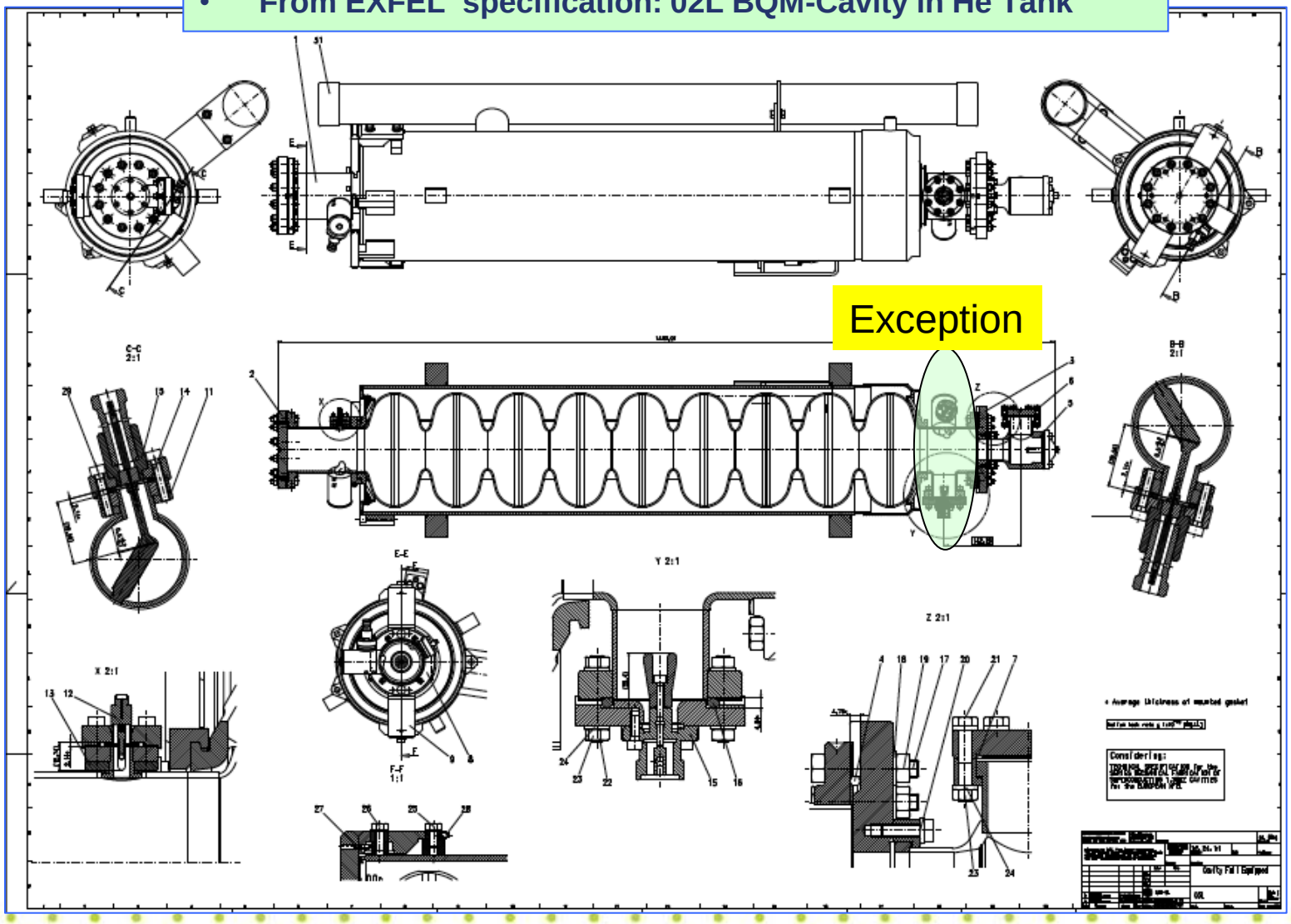

TDR Cavity Baseline Configuration

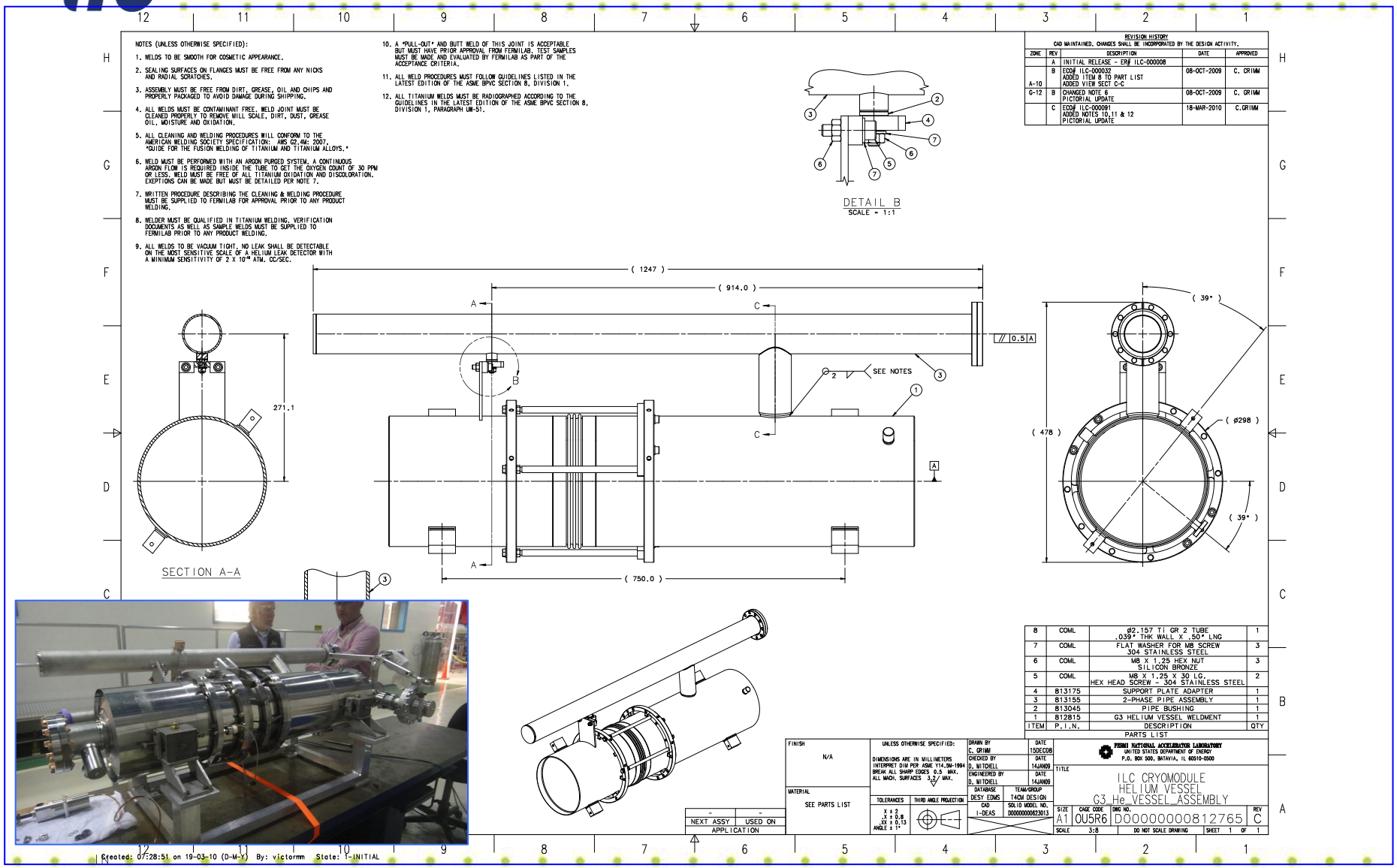

Cryomodule Plug-compatibility

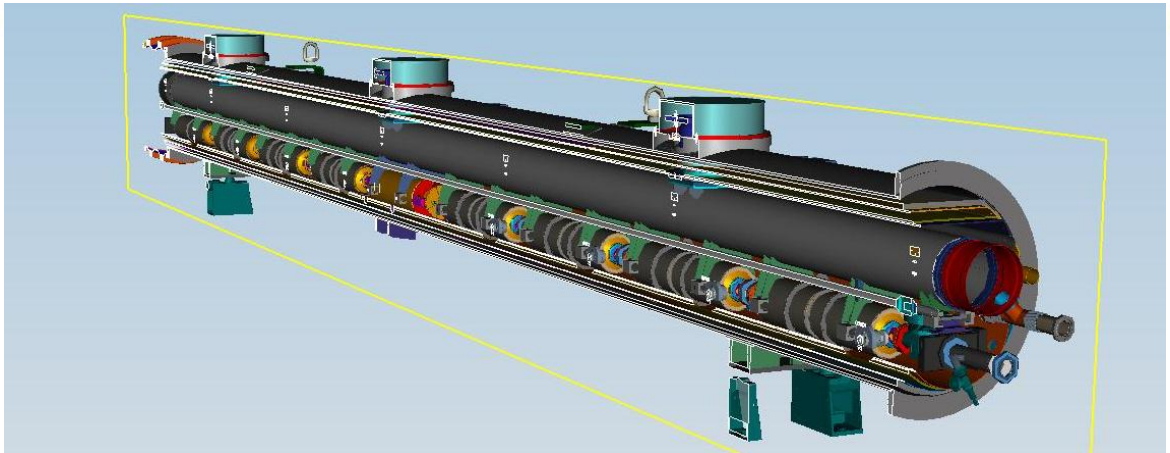

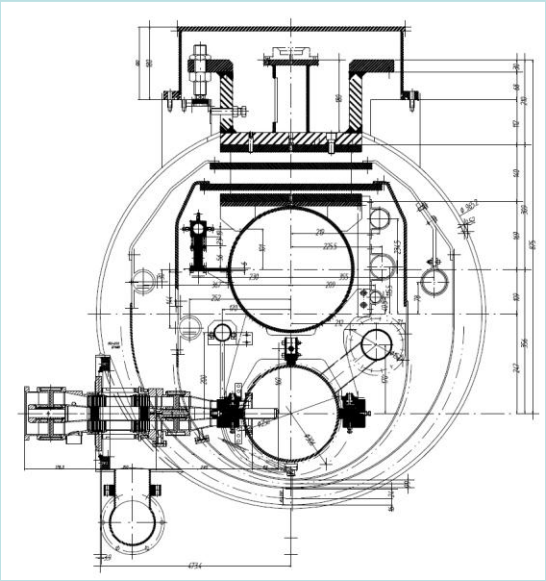

Two shield model

Vacuum vessel
= ϕ 965.2mm

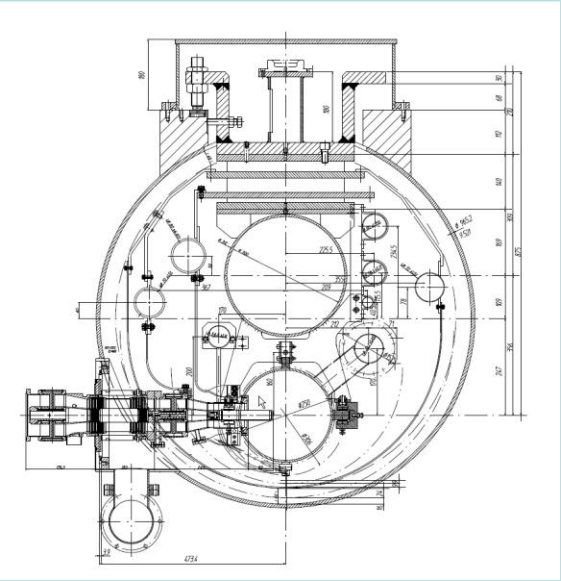

One shield model

Cavity/Cryomodule Fabrication

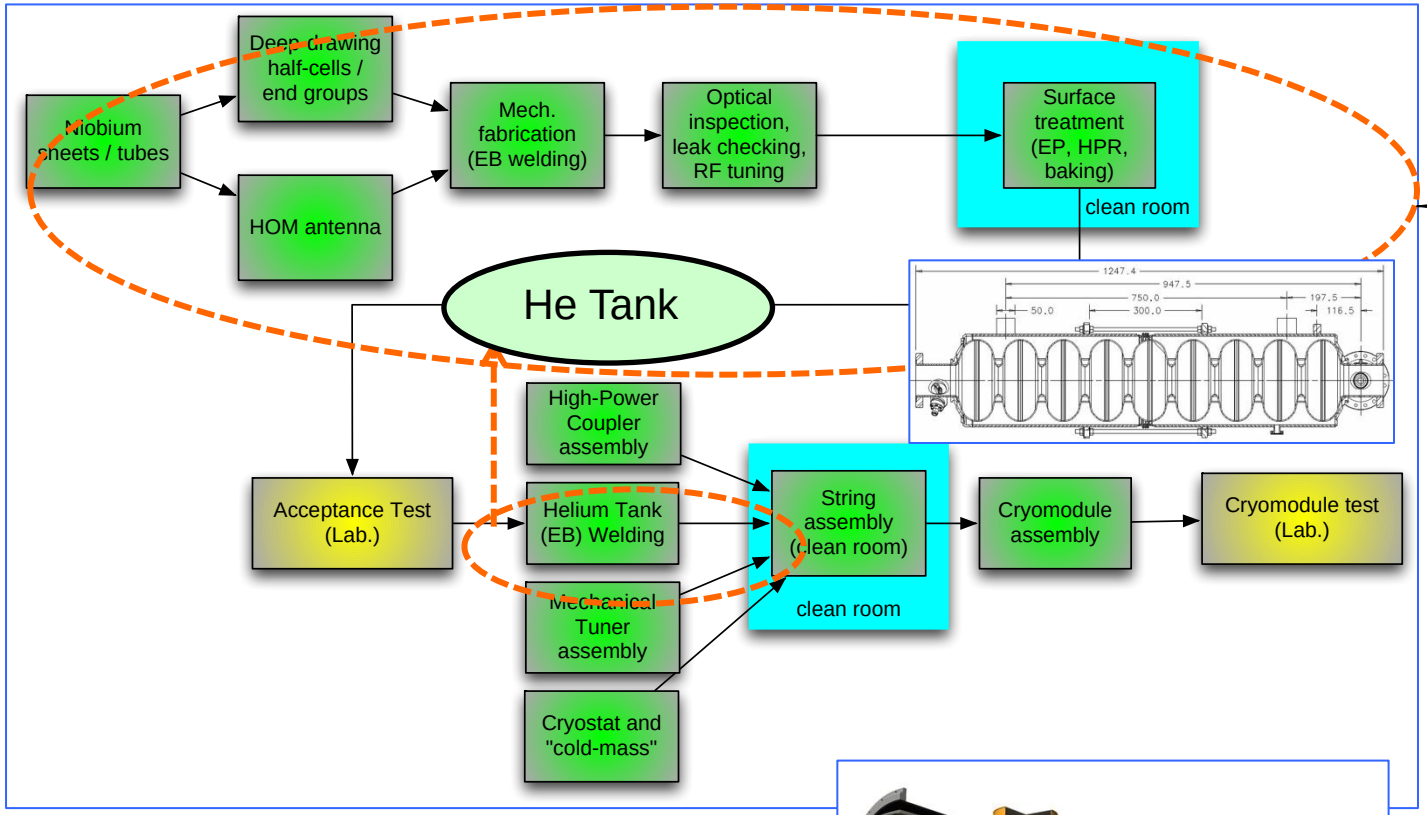

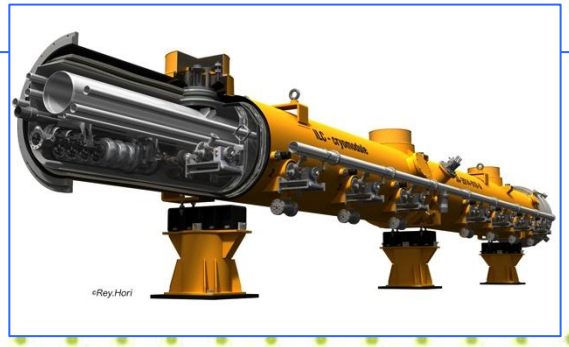

Material/ Sub-component

Cavity Fabrication

Surface Process

LHe-Tank Assembly

Vertical Test = Cavity RF Test

Cryomodule Assembly and RF Test

Reference for Cavity Specification

except for Tuner

- **Technical guideline for ILC-GDE TDR and the cost estimate:**
  - referring Specifications for E-XFEL SCRF 1.3 GHz Cavity, issued by DESY
    - EXFEL/001 and associated documents :Rev.B, June 2009, by courtesy of W. Singer (DESY-XFEL)),
    - The reference specification is available with ILC-GDE PMs, under permission of W. Singer (DESY-XFEL)
    - URL: http://ilcagenda.linearcollider.org/event/ILC-SCRF-TR

W. Singer

VALID DOCUMENTS
FOR THE
SERIES MECHANICAL
FABRICATION
OF
SUPERCONDUCTING 1.3GHZ
CAVITIES
FOR THE
EUROPEAN XFEL

(XFEL/001)

REVISION B / JUNE 23, 2009

1/2

XFEL/001

Courtesy: W. Singer

VALID DOCUMENTS

Number	Title	Re
XFEL/001	Valid Documents for the Series Mechanical Fabrication of Superconducting 1,3 GHz Cavities for the European XFEL	B
XFEL/002	Technical Specifications for the Series Mechanical Fabrication Superconducting 1,3 GHz Cavities for the European XFEL	B
XFEL/003	Quality Assurance and Quality Control Specifications	B
XFEL/004	Descriptions, Abbreviations, Drawing and EDMS numbers	B
XFEL/005	Helium Leak Tests	B
XFEL/006	Special Tools and Equipments	B
XFEL/007	Technical Specifications, Niobium Material	B
XFEL/008	Technical Specifications, Nb55Ti Alloy	B
XFEL/009	Flow Chart Dumb-Bell Production	B
XFEL/010	Recommendations for the Machining of Niobium and Niobium-Titanium	B
XFEL/011	Recommendation for the Treatment of Niobium Parts (Handling, Cleaning, Etching, Welding)	B
XFEL/012	Overview List and Detailed Inspection List of Tests and Demonstrations	B
XFEL/013	Scanning of Niobium Sheets (Round Blanks)	B
XFEL/014	Frequency Measurement on Dumb-Bell, Half Cell, End Group and Cavity	B
XFEL/015	Technical Specifications for the Series Production of Helium Tanks	B
XFEL/016	Technical Specifications for Welding the Helium Tank to the Cavity	B
XFEL/017	DESY Work Instructions for Welding a Cavity into a Helium Tank	B
XFEL/018	Standards	B

scrf-treq

Production Process/Responsibility

Step hosted	Industry	Industry/Laboratory	Hub-laboratory	ILC Host-laboratory
Regional constraint	no	yes	yes	yes
Accelerator - Integration, Commissioning				Accelerator sys. Integ.
SCRF Cryomodule - Perofrmance Test			Cold, gradient test	As partly as hub-lab
Cryomodule/Cavity - Assembly		Coupler, tuner, cav-string/cryomoduleassmbly work		As partly as hub-lab
Cryomodule component - Manufacturing	V. vessel, cold-mass ...			
9-cell Cavity - Performance Test			Cold, gradient test	As partly as hub-lab
9-cell Cavity - Manufacturing	9-cell-cavity assembly, Chem-process, He-Jacketing			
Sub-comp/material - Production/Procurement	Nb, Ti, specific comp. …		Procurement	

Communication w/ Industry

Visits to SC Cavity Manufacturers in Global Industry: 2009

Europe:
RI (ACCEL)
ZANON

Americas:
AES
NIOWAVE
PAVAC

Asia
MHI
HITACHI (expected)
TOSHIBA (expected)

Notes:
AES: Advanced Energy Systems
RI: Research Instruments (previously, ACCEL)
MHI: Mitsubishi Heavy Industries

A Satellite Meeting at IPAC-2010

SCRF Cavity Technology and Industrialization

Date : May 23, 2010, a full-day meeting, prior to IPAC-2010
Place: Int. Conf. Center, Kyoto, Japan
Organized by: ILC-GDE Project Managers,

The 2nd workshop on SCRF Technology and Industrialization for the ILC

as a satellite meeting of SRF 2011

- **Date: July 24, 2011**
- **Place: Chicago**
- **Agenda:**
  - Introduction
  - Reports from SCRF cavity/cryomodule industry
  - Reports from SC material vendor
  - Comments from Potential Regional Hub-laboratory
  - Discussions on the ILC SCRF industrialization model
- **Note:**
  - Open for everybody,
  - Many Industrial participations acknowledged

The 2nd cycle Communication with Companies

SC Material Cavity /Cryomodule Manufacturers

	Date	Company	Place	Technical sbject
1	2/8, 2011	Hitachi	Tokyo (JP)	Cavity/Cryomodule
2	2/8	Toshiba	Yokohana (JP)	Cavity/Cryomodule, SCM
3	2/9	MHI	Kobe (JP)	Cavity / Cryomodule
4	2/9	Tokyo Denkai	Tokyo (JP)	Material (Nb)
5	2/18	OTIC	NingXia (CN)	Material (Nb, NbTi, Ti)
6	(3/3), 9/14	Zanon	Schio (IT)	Cavity/Cryomodule
7	3/4,	RI	Koeln (DE)	Cavity
8	(3/14), 4/8	AES	Medford, NY (US)	Cavity
9	(3/15), 4/7	Niowave	Lansing, MI (US)	Cavity/Cryomodule
10	4/6	PAVAC	Vancouver (CA)	Cavity
11	4/25	ATI Wah-Chang	Albany, OR (US)	Material (Nb, Nb-Ti, Ti)
12	4/27	Plansee	Ruette (AS)	Material (Nb, Nb-Ti, Ti)
13	5/24	SDMS	Sr. Romans (FR)	Cavity
14	7/6	Heraeus	Hanau (DE)	Material (Nb, Nb-Ti, Ti)
15	10/18	Babcock-Noell	Wurzburg (DE)	CM assembly study
16	11/11	SST	Maisach (DE)	Electron Beam Welder

The 3rd Cycle Communication with Companies

Further studies with contracts in 2011-2012

	Date	Company	Place	Technical sbject
1	2/8, 2011	**Hitachi**	Tokyo (JP)	Cavity/Cryomodule
2	2/8	**Toshiba**	Yokohana (JP)	Cavity/Cryomodule, SCM
3	2/9	**MHI**	Kobe (JP)	Cavity / Cryomodule
4	2/9	Tokyo Denkai	Tokyo (JP)	Material (Nb)
5	2/18	OTIC	NingXia (CN)	Material (Nb, NbTi, Ti)
6	(3/3), 9/14	Zanon	Schio (IT)	Cavity/Cryomodule
7	3/4,	**RI**	Koeln (DE)	Cavity
8	(3/14), 4/8	**AES**	Medford, NY (US)	Cavity
9	(3/15), 4/7	Niowave	Lansing, MI (US)	Cavity/Cryomodule
10	4/6	PAVAC	Vancouver (CA)	Cavity
11	4/25	ATI Wah-Chang	Albany, OR (US)	Material (Nb, Nb-Ti, Ti)
12	4/27	Plansee	Ruette (AS)	Material (Nb, Nb-Ti, Ti)
13	5/24	SDMS	Sr. Romans (FR)	Cavity
14	7/6	Heraeus	Hanau (DE)	Material (Nb, Nb-Ti, Ti)
15	10/18	**Babcock-Noell**	Wurzburg (DE)	CM assembly study
16	11/11	SST	Maisach (DE)	Electron Beam Welder

Mass-Production Studies

in contracts

	Company	Mass production model	Contract funded/hosted by
Cavity	RI in progress	100% (50%)	DESY
	AES	20 %	DOE/Fermilab
	MHI	20, 50, 100%	KEK
Quadrupole	Toshiba	100 %	KEK
CM and assembly	Hitachi	20, 50, 100%	KEK
	AES	25%	DOE/Fermilab
CM assembly	BN in progress	100, 33 %	CERN

In parallel, EXFEL experience kindly informed by DESY, INFN, CES/Saclay

ILC Cavity Cost-study compared w/ RDR cost (updated, May., 2012)

Confidential

	ILC: RDR	EXFEL: Original 300	EXFEL: + 80	ILC: RI	AES	MHI
Prep.+Prod. Yrs.	2+3	1+2.5	?	x + 3	2+6	2+6
Fraction	100%	2 x 50%	~ same	100 %	20%	20 / 100%
# cavity	17,000	300	+80	~18,000	3,600	3,600 / 18,000
SC Material (supplied)						
Mech. Fabrication including EBW						
Chemistry						
Ti He-Vessel						
Accept. Test (RT)						
Factory investment						
Fab. Cost/cavity (+ SC-mat.= Sum)						
Unit	K ILCU	K Euro	K Euro	K Euro	K USD	M JY

What we are learning/progressing ?

- **Cavity gradient yield**
  - Reaching ~80 % at 35 MV/m, and more report by J. Kerby
- **Technical preparation for industrialization**
  - Plug-compatible interface condition established for industrial study and cost estimate for TDR
  - Cost effective fabrication being studied at also lab.
- **Communication with industry**
  - Communication cost-estimate progressing under more practical boundary conditions, and more report on costing by G. Dugan

What is still to be investigated?

- **Cavity**
  - Input-coupler's cost to be significantly reduced, (more discussed by G. Dugan)
- **Cryomodule**
  - Assembly and test plan with communication with labs.
    - Fraction of cryomodule testing and conditioning of input-couplers will much affect on the cost
- **Industrialization and costing**
  - Guideline for mass-production and costing:
  - How to rely on world-wide market and single/multiple vender, (more discussed by G. Dugan.)

SCRF Cost Effective Production

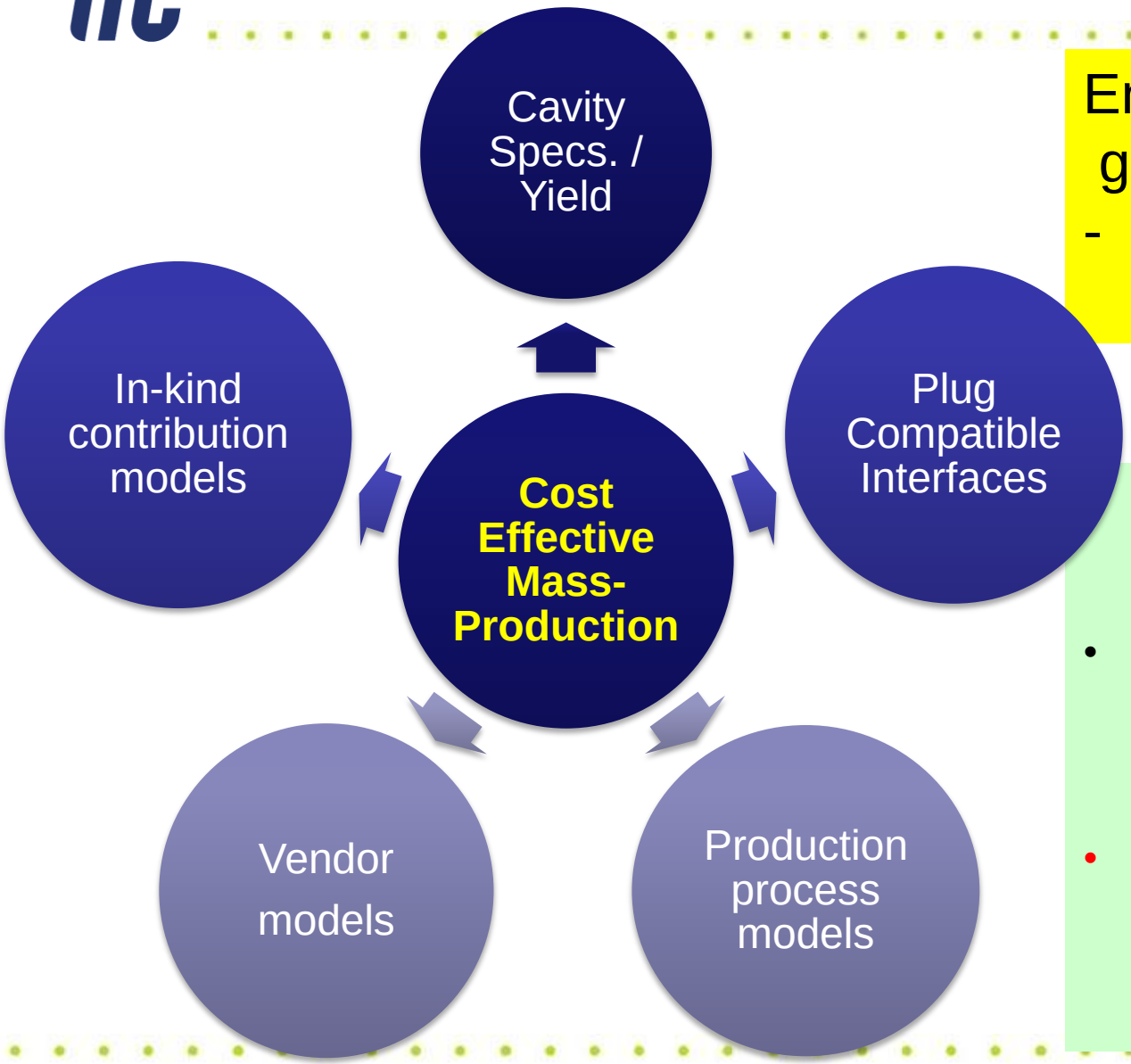

Emphasize
global approach !!
- Multiple region mass-production

Critically important TDP2 activity

- Learn from XFEL experience
  - 5% ILC
- **Develop realistic models** on which to base cost estimate
  - With industry & Lab

SCRF Procurement/Manufacturing Model

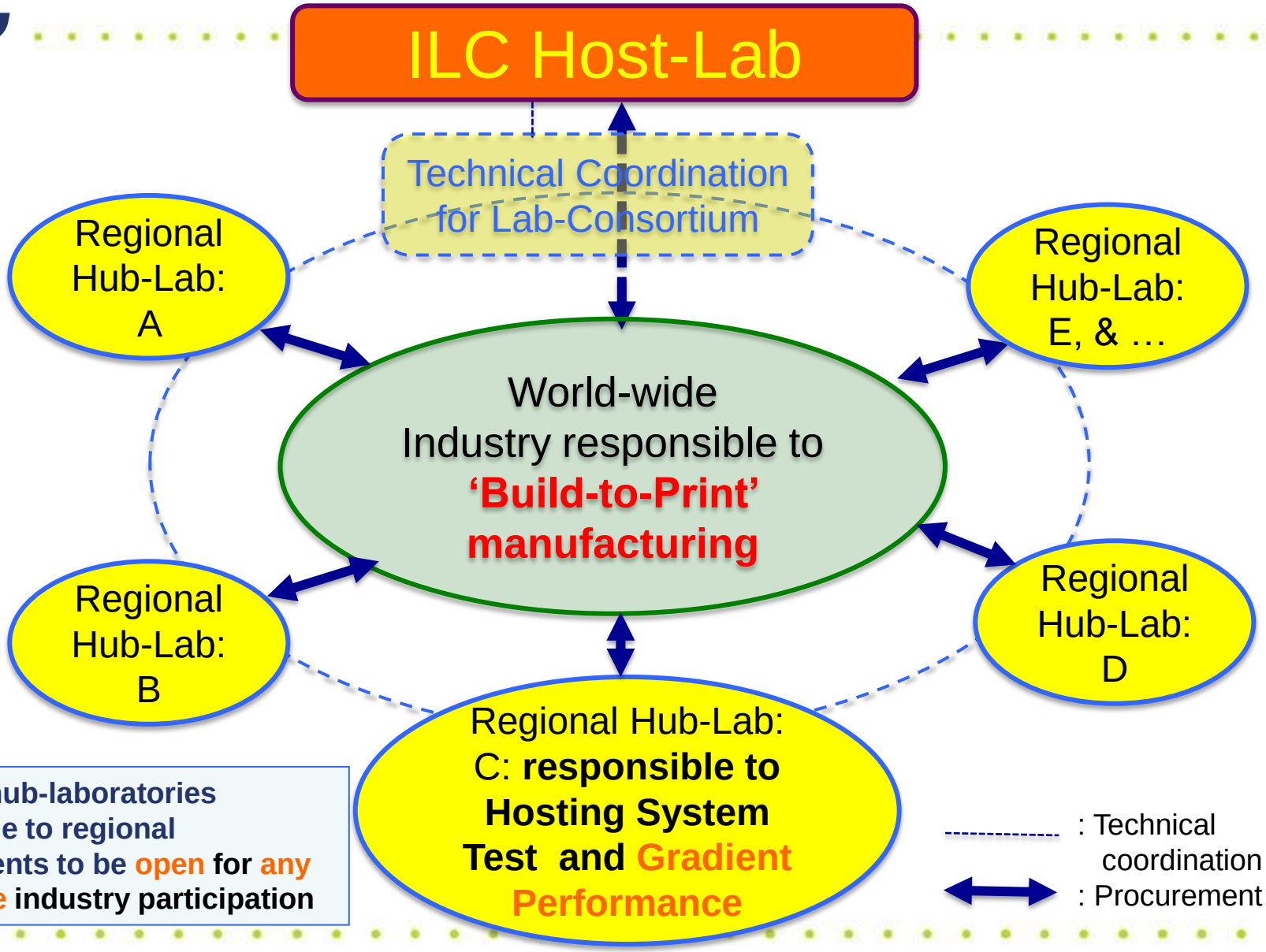

Regional hub-laboratories responsible to regional procurements to be open for any world-wide industry participation

Summary

- **Technical and Cost-study in Communication w/ Industry**
  - We are continuing to seek for cost effective production in both
    - Widening cooperation with industry
    - Emphasizing in-house cost-effective mass-production study
  - We have communicated with industry to provide cost information with various models (20 ~ 100 %).
- **Cost study in Communication with Laboratories**
  - Communication with potential regional hub-laboratories will be important to establish a whole scope of the cryomodule assembly and test.
  - CERN's contribution is a key to study a lab-hosting cryomodule assembly and test in contract with industry
- **Further Study required**
  - Cost effective industrialization study specially for:
    - Couplers, cryomodule assembly and test, and some others
  - Industrialization model with world-wide cooperation, for costing in TDR

Backup

Creation of a Global Database for Better Understanding of "Production Yield"

- **Global Data Base Team formed by:**
  - Camille Ginsburg (Fermilab), leader
  - Rongli Geng (JLab)
  - Zack Conway (Cornell University)
  - Sebastian Aderhold (DESY)
  - Yasuchika Yamamoto (KEK)

- **Activity**
  - July 2009:
    - Determine DESY-DB to be viable option,
  - Sept., 2009: (ALCPG/GDE)
    - Dataset, web-based, support by FNAL/DESY,
  - Dec., 2009: (SB2009) : 1st update
  - March, 2010 (IW-ILC) : 2nd update
  - June, 2010 (End TDP-1) : 3rd update
  - March, 2011 (ILC-ALCPG): 4th update
    RI, Zanon, AES, MHI manufactured Cavity data included.

Production yield allowing to:
- include the 2nd chemical process

Cavity Test Procedure consideration (He tank-on test)

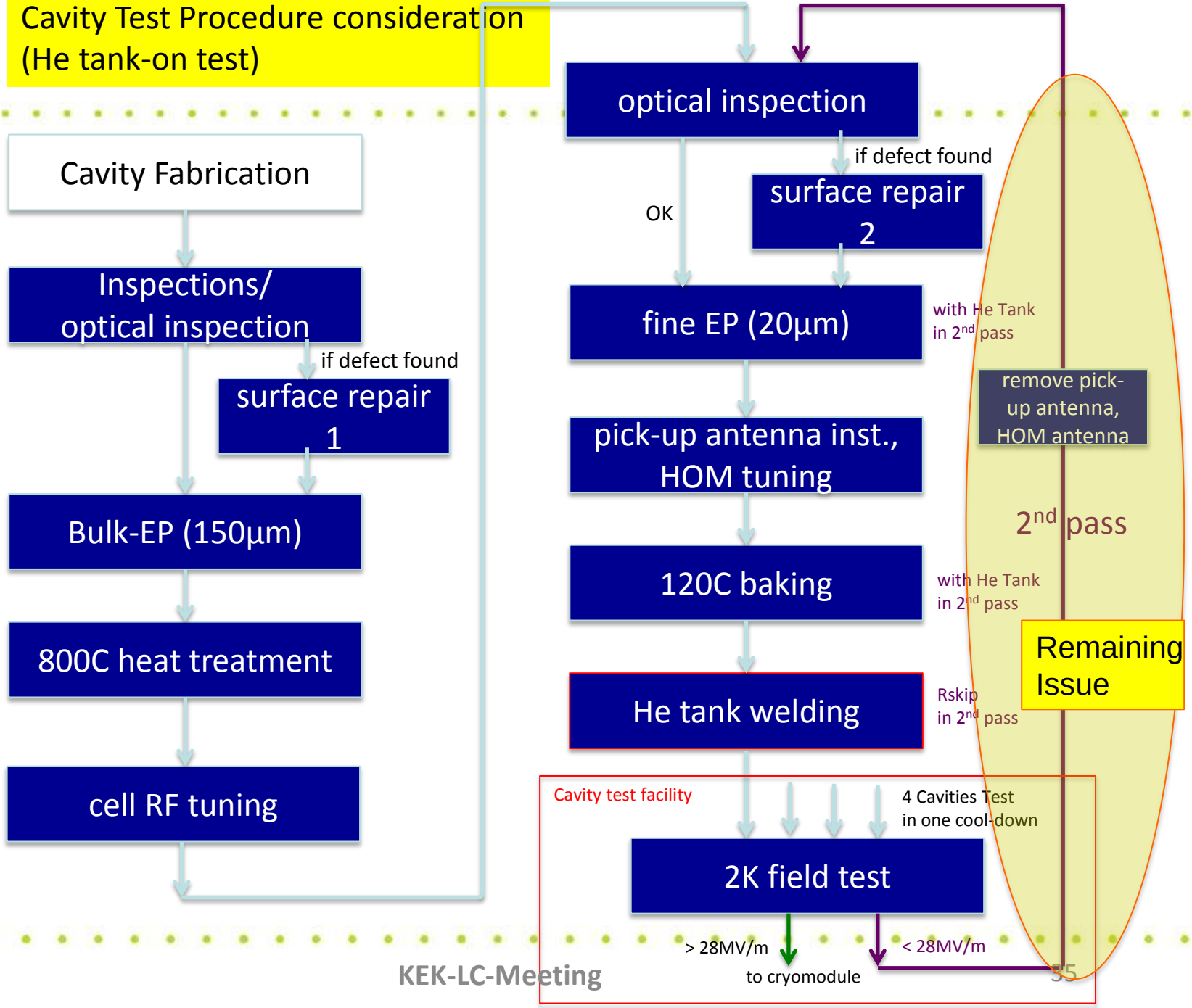

Standard Procedure Determined

for ILC-SCRF Cavity

Twice allowed

	Standard Fabrication/Process
Fabrication	Nb-sheet purchasing
	Component Fabrication
	Cavity manufacturing with **EBW**
Process	**EP-1 (~150um)**
	Ultrasonic degreasing with detergent, or ethanol rinse
	High-pressure pure-water rinsing
	Hydrogen degassing at > 600 C
	Field flatness tuning
	EP-2 (~20um)
	Ultrasonic degreasing or ethanol (or EP 5 um with fresh acid)
	High-pressure pure-water rinsing **(HPR)**
	Antenna Assembly
	Baking at 120 C
Cold Test (vertical test)	Performance Test with temperature and mode measurement

Key Process

Fabrication

- Material
- EBW
- Shape

Process

- Electro-Polishing
- Ethanol Rinsing or
- Ultra sonic. + Detergent Rinsing
- High Pressure Pure Water Rinsing

Cavity Fabrication Process

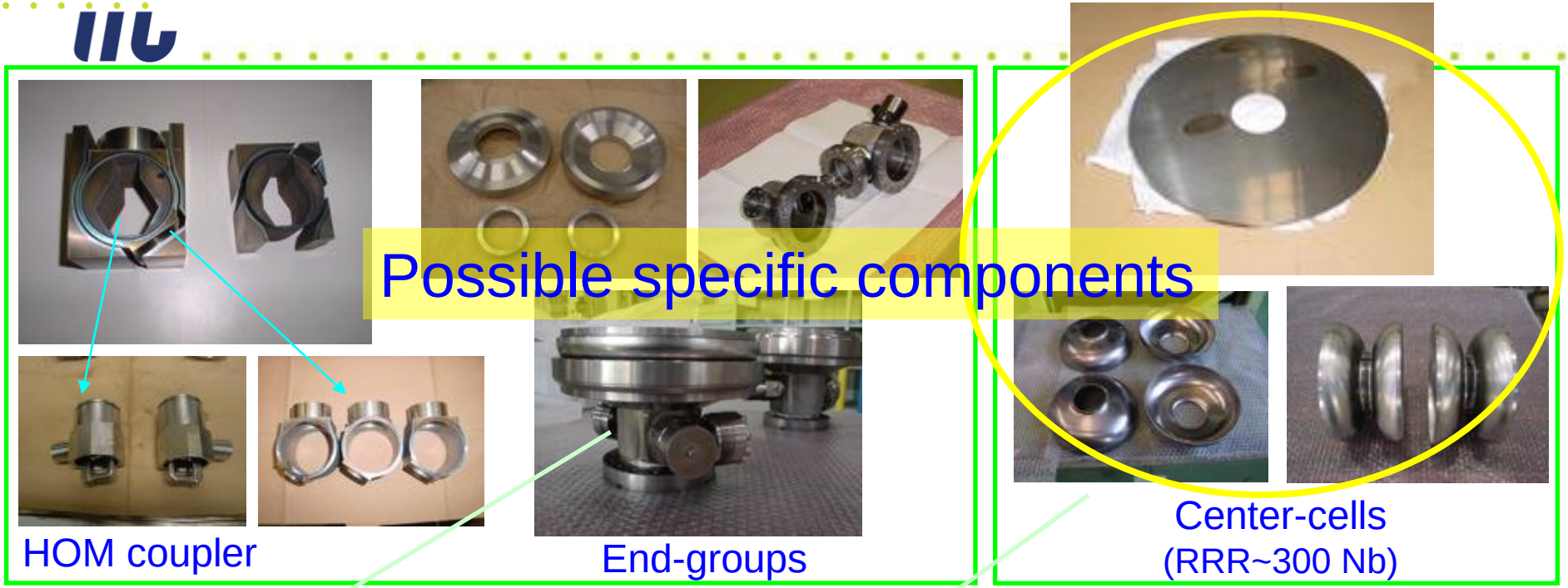

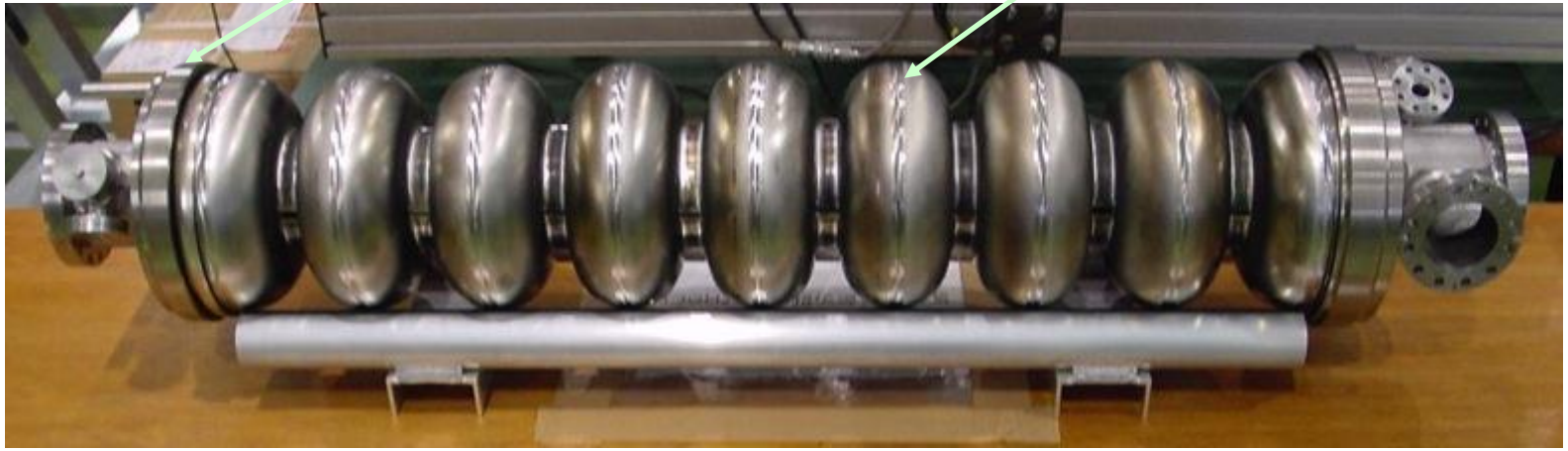

Sub-Components: Coupler/Tuners

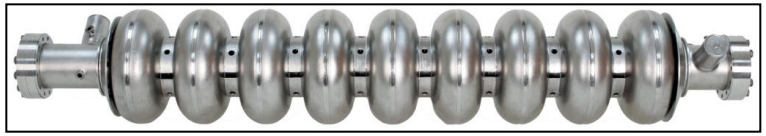

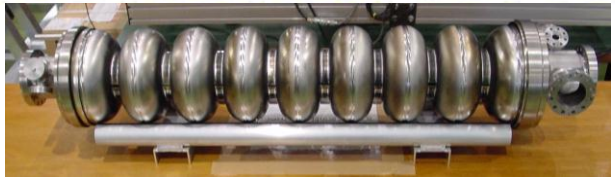

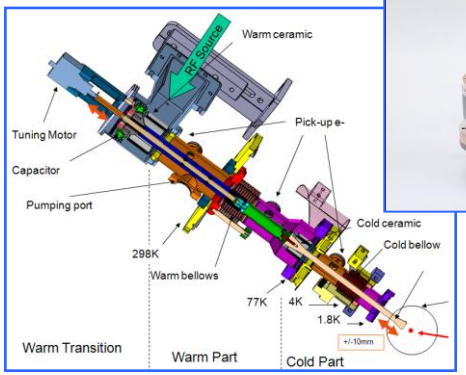

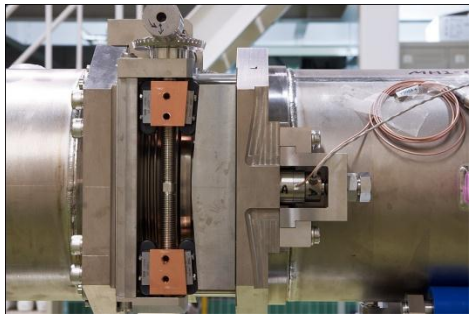

- **Possible supply by specific companies relying on the world-wide availability**

Courtesy: H. Weise (DESY)

Cavity String & Module Assembly

- Using experience gained at DESY and results of industrial studies, the **assembly facility** for all XFEL modules is going to be set up **at the CEA-Saclay site**.

- **CEA (IRFU), CIEMAT, DESY, INFN-Milano, LAL Orsay, Swierk take the responsibility for the cold linac.**

Courtesy: H. Weise (DESY), O. Napoli (Saclay)

Saclay In-kind Contributions

irfu

cea

saclay

cavity strings assembly
cryomodules assembly
BPMs system

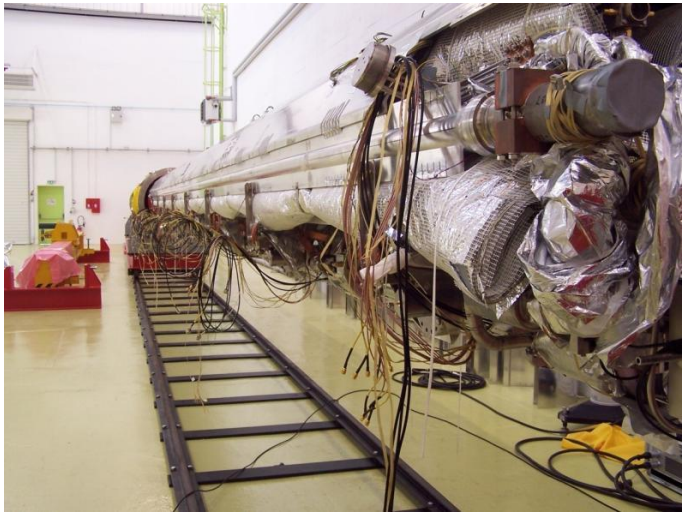

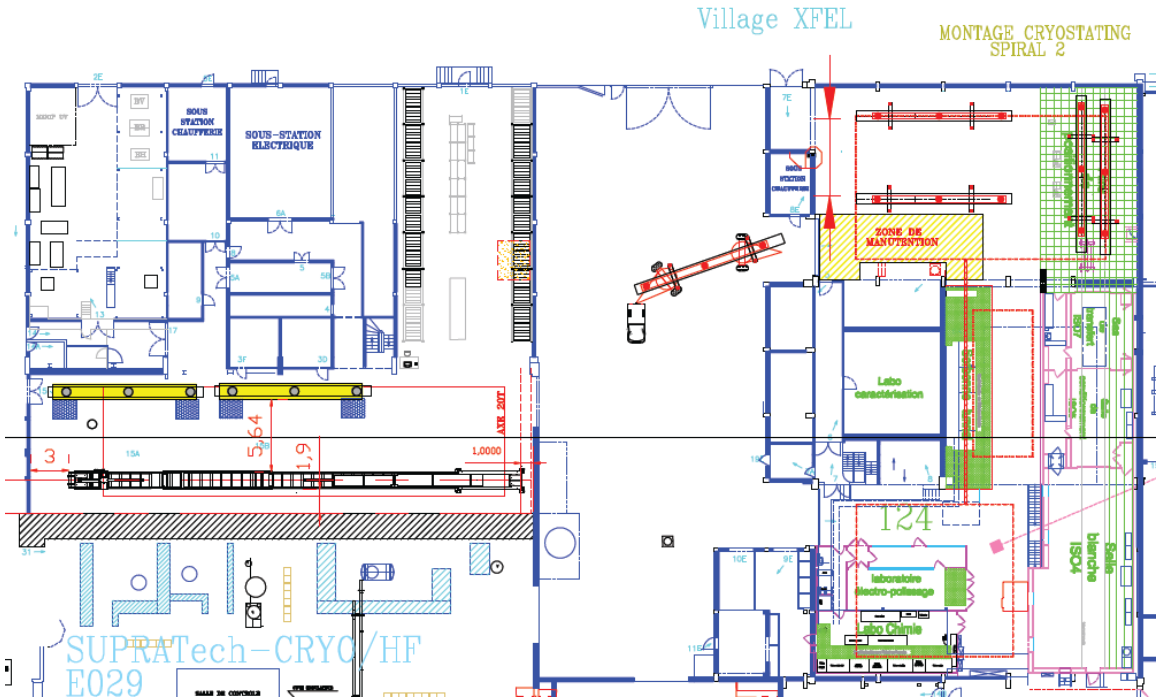

DESY HELMHOLTZ ASSOCIATION

Courtesy: H. Weise (DESY)

XFEL Cavity/Cryomodule Test Station

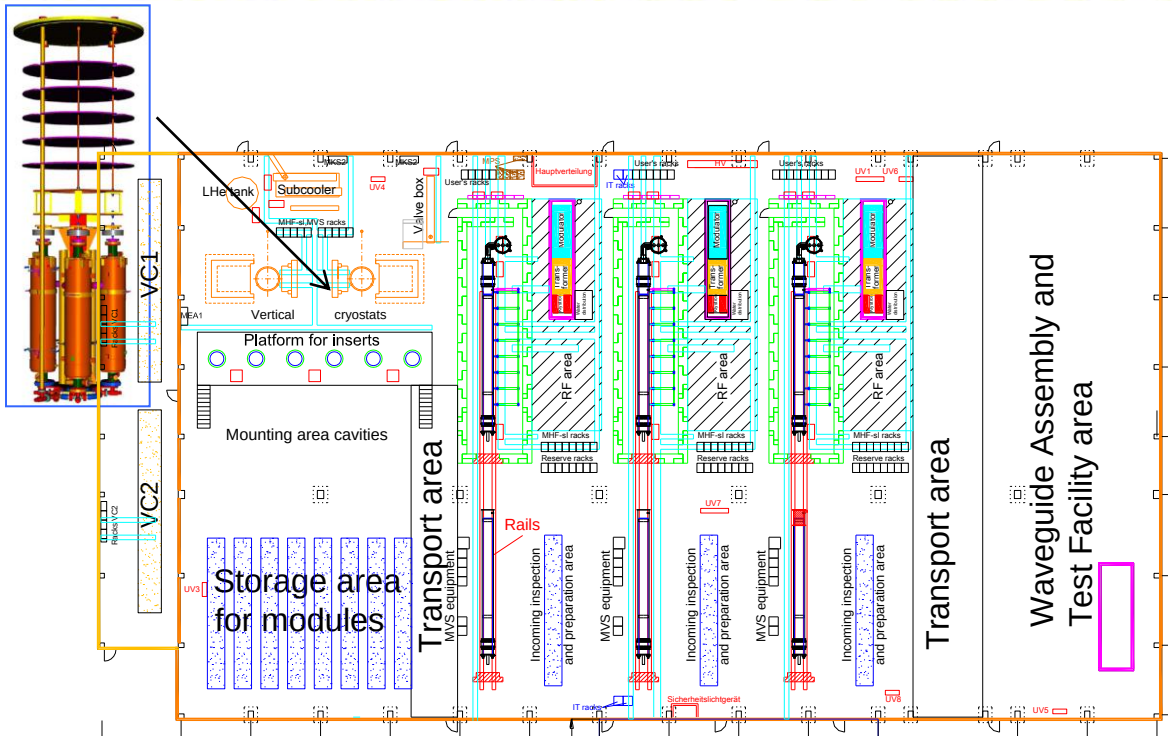

- If we may have ~ 3 of this test station, the ILC cavity/cryomodule test can be managed.
- We may consider ~ x 3 (= 20 / 2 period / 3 regions)
- Or, it is just enough, if 1/3 cryomodules to be tested in ILC as assumed in ILC-RDR

Courtesy: P. Lubrun (CERN), 1st WS, 2010

CERN's Experience from LHC Cryostating and Test

Bringing industry to the laboratory
Cryostat assembly by industry on CERN site

Producing in-house with industrial methods
Cryogenic magnet test station at CERN