Preparation for SCRF Industrialization

CONFIDENTIAL numbers not shown in Page 11 ~16.

Akira Yamamoto, Marc Ross, and Nick Walker
ILC-GDE Project Managers

Prepared for ILC-PAC Review, Taipei – May 19, 2011

Outline

- **Introduction**
  - Preparing for industrialization
- **Communication with industry in early 2011**
  - Visit to companies and 'request for information' for the ILC-SCRF cavity/cryomodule cost-study
  - Specific studies in cooperation with representing companies with specific experiences
- **Plan for further study in later 2011**
  - Lab-hosted Cavity/Cryomodule integration and test, and the role of 'regional hub-laboratories'

SCRF-ML Technology Required

RDR Parameters	Value
C.M. Energy	500 GeV
Peak luminosity	$2x10^{34}$ $cm^{-2}s^{-1}$
Beam Rep. rate	5 Hz
Pulse time duration	1 ms
Average beam current	9 mA (in pulse)
Av. field gradient	**31.5 MV/m**
# 9-cell cavity	**14,560**
# cryomodule	**1,680**
# RF units	**560**

RDR → SB2009

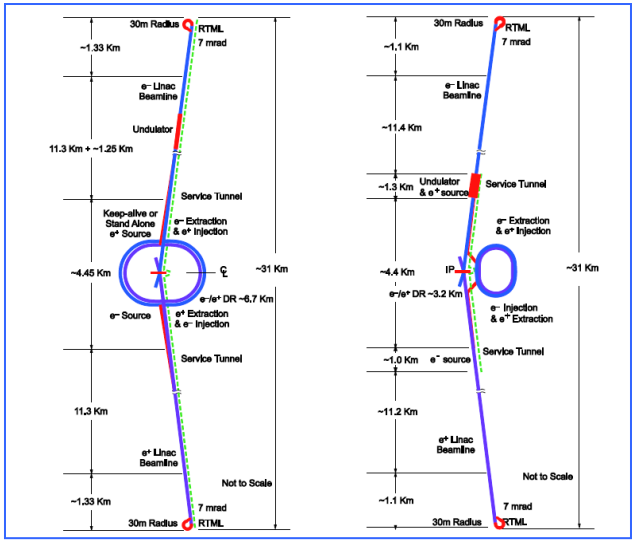

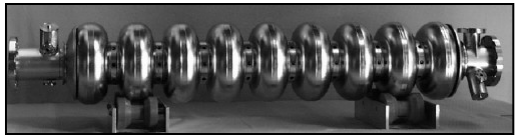

Global Plan for SCRF R&D

Year	07	2008	2009	2010	2011	2012
Phase	TDP-1				TDP-2	
Cavity Gradient in v. test to reach 35 MV/m	→ Yield 50%				→ Yield 90%	
Cavity-string to reach 31.5 MV/m, with one-cryomodule		Global effort for string assembly and test (DESY, FNAL, INFN, KEK)			We are here	
System Test with beam acceleration			FLASH (DESY) , NML (FNAL) STF2 (KEK, test start in 2013)			
Preparation for Industrialization				Production Technology R&D		
Communication with industry:	2009: 1st step: Visit Venders (2009) 2010: 2nd step: Organize Workshop (2010) 2011: 3rd step: Send specification & receive response					

Global Plan for SCRF R&D

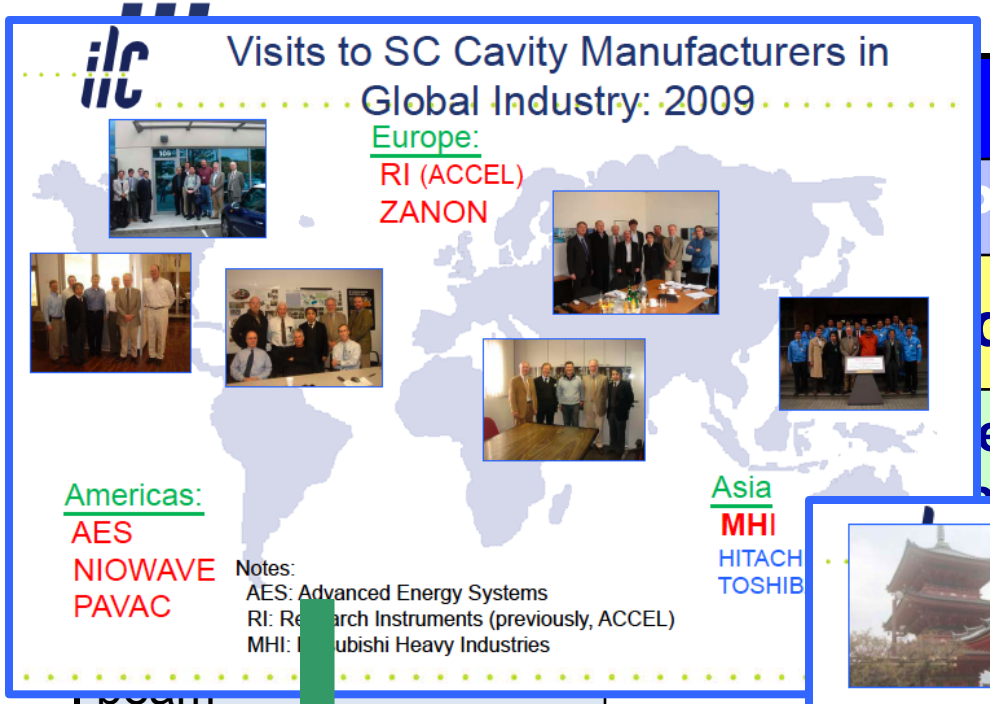

	2009	2010	2011	2012
	P-1	TDP-2		
	d 50%	→ Yield 90%		
	effort for string ly and test			
beam acceleration				
Preparation for Industrialization				
Communication with industry:	2009: 1st step: Visit Vendor (2009) 2010: 2nd step: Organize Workshop (2010) 2011: 3rd step: Send specification & receive response			

A Satellite Meeting at IPAC-2010

SCRF Cavity Technology and Industrialization

Date : May 23, 2010, a full-day meeting, prior to IPAC-2010
Place: Int. Conf. Center, Kyoto, Japan
Organized by: ILC-GDE Project Managers,

Introduction

- **Our efforts:**
  - Understand status of industry, and discuss technolgy and the cost saving effort for the ILC scale production
  - Study the ILC SCRF industrialization models
- **Two approaches in 2011~:**
  - Visiting and communication with potential industry
    - visit industry and discuss 'request for information' for cost-study, with currently available industrial technology
  - Study on specific subjects with small-contracts
    - Possible Factory layout for cavity production (in AS; KEK centered)
    - System engineering for mass production (in EU; CERN centered)
      - The first coordination meeting held at CERN, in May, 2011
    - Mass production technology study prepared (in AMs; Fermilab centered)

Communication with Industry

- **Visit factories and discuss 'technical requirements':**
  - Based on currently available manufacturing technology and available information with worldwide industry
    - Assume the EXFEL 'build-to-print' specifications as a common reference with allowing 'plug-compatible' alternate designs with the cost equivalent or more effective
- **Requests for information to companies**

1. Cost comparisons: 20/50/100 % in 3 or 6 yr production ?
2. Factory-site location: company or laboratory ?
3. Sharing responsibilities for the cost-effective production ?
4. Deliverables with 'build-to-print' fabrication?
5. Consortium to be considered or not

Visiting Companies in Progress

	Date	Company	Place	Technical sbject
1	2/8	Hitachi	Tokyo (JP)	Cavity/Cryomodule
2	2/8	Toshiba	Yokohana (JP)	Cavity/Cryomodule, SCM
3	2/9	MHI	Kobe (JP)	Cavity / Cryomodule
4	2/9	Tokyo Denkai	Tokyo (JP)	Material (Nb)
5	2/18	OTIC	NingXia (CN)	Material (Nb, NbTi, Ti)
6	3/3	Zanon	Via Vicenza (IT)	Cavity/Cryomodule
7	3/4	RI	Koeln (DE)	Cavity
8	3/14, (4/8)	AES	Medford, NY (US)	Cavity
9	3/15, (4/7)	Niowave	Lansing, MI (US)	Cavity/Cryomodule
10	4/6	PAVAC	Vancouver (CA)	Cavity
11	4/25	ATI Wah-Chang	Albany, OR (US)	Material (Nb, Nb-Ti, Ti)
12	4/27	Plansee	Ruette (AS)	Material (Nb, Nb-Ti, Ti)
13	5/24	SDMS	Sr. Romans (FR)	Cavity
14	7/6	Heraeus	Hanau (DE)	Material (Nb, Nb-Ti, Ti)

1st Stage Responses

Req. of Inf.	Response: 1a. Production model desired	1b. Cost information	Notes:
Hitachi	20 %, 6 yrs	Cryomodule	Studying cryomodule assembly factory layout
Toshiba	20 %, 6 yrs	Cavity, cryomodule, and magnet	Studying Conductively cooled magnet feasibility
MHI	Waiting for response		Studying cavity production facility layout
Zanon	Waiting for response	Cavity, cryomodule; EXFEL experience to be extended	New infra-structure for EXFEL under construction
RI	Waiting for response	Cavity: EXFEL experience to be extended	New facility for EXFEL in preparation
AES	20 %, 6 yrs	Cavity: excluding facility and sc material	Proposing lab-hosted facility and SC material supplied
Niowave	20 %, 6 yrs	Cavity; including material	Adequate scale for own future business scopes
PAVAC	20 %, 6 yrs	Cavity: excluding sc material	More cost and risk with single/few vendor(s)
SDMS	to be visiting		

1st Stage Responses

Req. of Inf.	Production capacity expected	Response to: 1a. Production Model desired	1b. Cost information on	Remarks:
Tokyo Denkai	Nb sheets, max	20 %,7 years	Nb sheet (@ RRR-300)	Assuming 3 x 'current capacity'
OTIC	Nb sheets NbTi ,	20 %, 6 yrs	Nb sheet (@ RRR-300)	
ATI WahChang	Nb sheets/pipez, NbTI	20 % 6 yrs	Nb sheet (RRR=300) NbTi	Further fraction cap able with require investment and cost
Plansee	Nb sheets/pipes Nb-pipe	20 %, 6 yrs	Nb sheet (RRR=300)	
Heraeus	Nb sheets/Pipes Nb-Ti	Visit soon	Nb sheet (RRR=300)	

Progress in Cavity Cost-study compared with RDR Cost-estimate and E-FXEL contracted cost

Confidential

	ILC: RDR	EXFEL: * Courtesy to H.W., DESY	ILC: A	N	P	T
Prep.+Prod. Yrs.	2+3	1+2.5	2+6	2+6	2+6	2+6
Fraction	100%	2 x 50%	20%	20%	20%	20%
# cavity	17,000	300	3,200,	3,200	3,200	3,200
Unit	K ILCU	K Euro	K $	K $	K $	K JYen

Progress in Cavity Cost-study compared with RDR Cost-estimate (as of May 13, 2011)

Confidential

	ILC: RDR	EXFEL	ILC: T.	O.	A.	P	H.
Prep.+Prod. Yrs.	2+3	~1.5	2+6-1	2+6-1	2+6-1	2+6-1	
Fraction	100%	100%	20% (max.)	20%	20%	20%	
# Cavity (Nb sheet weight)	17,000	600	3,200, (98 tons)	3,200	3,200	3,200	
Currentcy unit	ILCU	k Euro	K JYen	K $	K $	K Euro	

Note: The aboveILC material cost is 9-cell cavity's central part only, Total SC material cost including end-group need to be ~ 10 % higher

An example Cost Estimate

Confidential

- **Response given by a company according to our 'Request for Information'**

Cavity Fabrication Ideal Price Comparison

Confidential

- Evaluated by AES

Progress in Cavity/Cryomodule Cost-study compared with RDR Cost-estimate

Confidential

	ILC: RDR	EXFEL:		ILC: H	ILC:T	ILC:T
# cavity	2,500			340 (20%)	340 (20%)	SCM only 600 (100%)
Production years	2+3			2+6	2+6	
Unit	K ILCU			kJY	kJY	

Cost-Study
Status and Further Plan

Confidential

- **Cost-study in Communication with industry**
  - In progress, and more than half companies responding to our 'request for information', and we are getting very important information for our further study,
  - We are getting the hint that SCRF cavity costs are ……, ……..
  - We are planning to organize the 2nd stage of communication by summer, 2011, to prepare for our own final stage study in autumn,
- **Cost study in Communication with Laboratories**
  - Information given by DESY/EXFEL team lead by H. Weise has been critically important, valuable, and acknowledged,
  - Further communication with potential regional hub-laboratories will be important to develop a whole scope of the industrialization model..

The 2nd workshop on SCRF Technology and Industrialization for the ILC

as a satellite meeting of SRF 2011

- **Date: July 24, 2011**
- **Place: Chicago**
- **Agenda:**
  - Introduction
  - Reports from SCRF cavity/cryomodule industry
  - Reports from SC material vendor
  - Comments from Regional Hub-laboratory
  - Discussions on the ILC SCRF industrialization model
- **Note:**
  - Open for everybody,
  - Industrial participation anticipated

An Industrialization Model

- **Industry-based Cavity Production**
  - Manufactured by companies,
    - shared fraction of 20 % ~ 100 %
  - According to 'build-to-print specification' , satisfying
    - Minimum acceptance criteria and inspections,
    - Specific process,
  - Delivery with no test for the gradient performance
- **Laboratory-based Cavity Performance Test**
  - Collaborating laboratories should be responsible for the cavity gradient performance,
    - As a deliverable in collaboration between / among laboratories,
  - Multiple laboratories' collaboration are important
  - Delivery from laboratory to (host) laboratory with performance tested,

An Industrialization Model and Responsibility

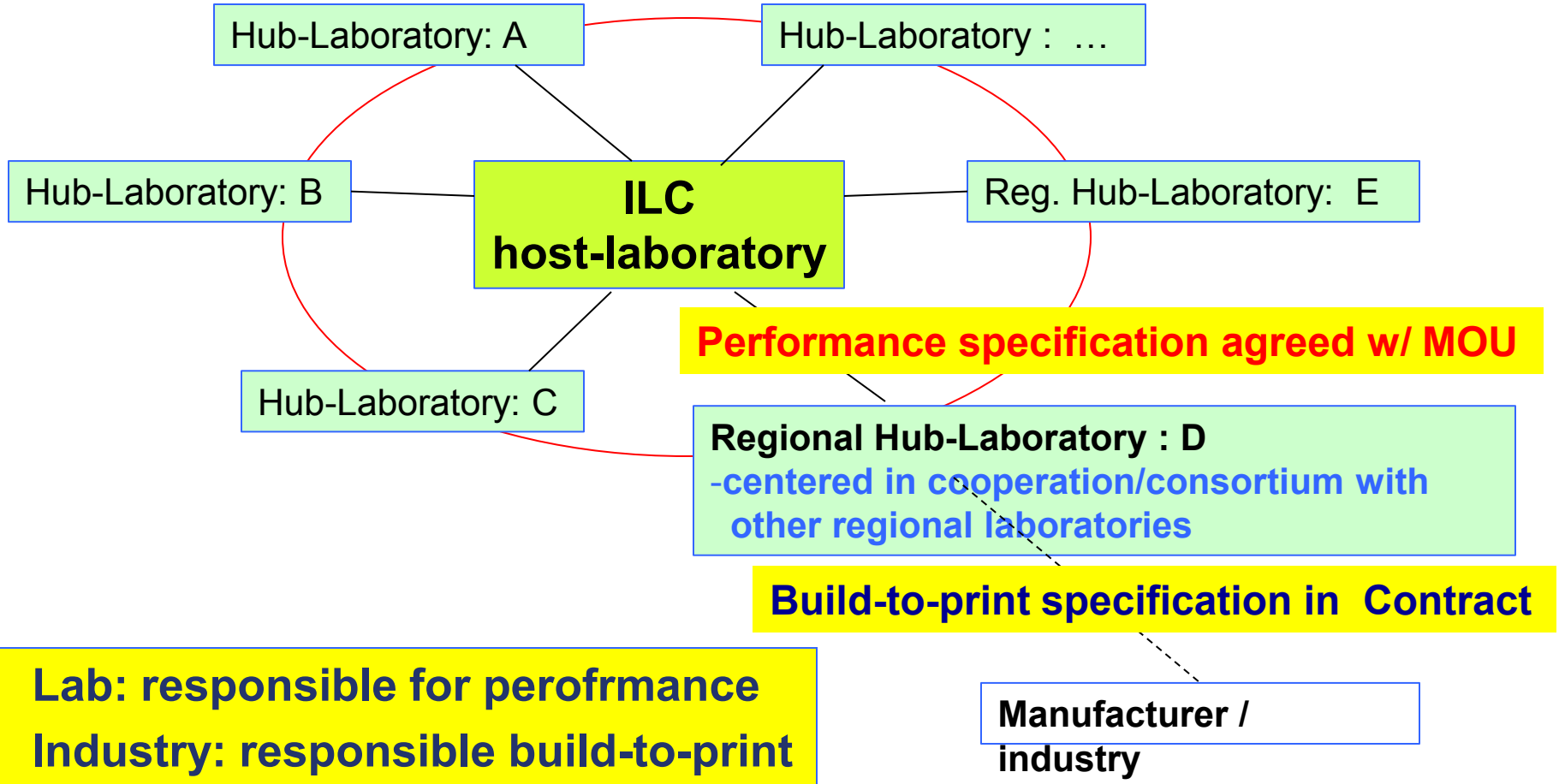

- **Lab: responsible for perofrmance**
- **Industry: responsible build-to-print manufacturing**

Technical Management Scheme

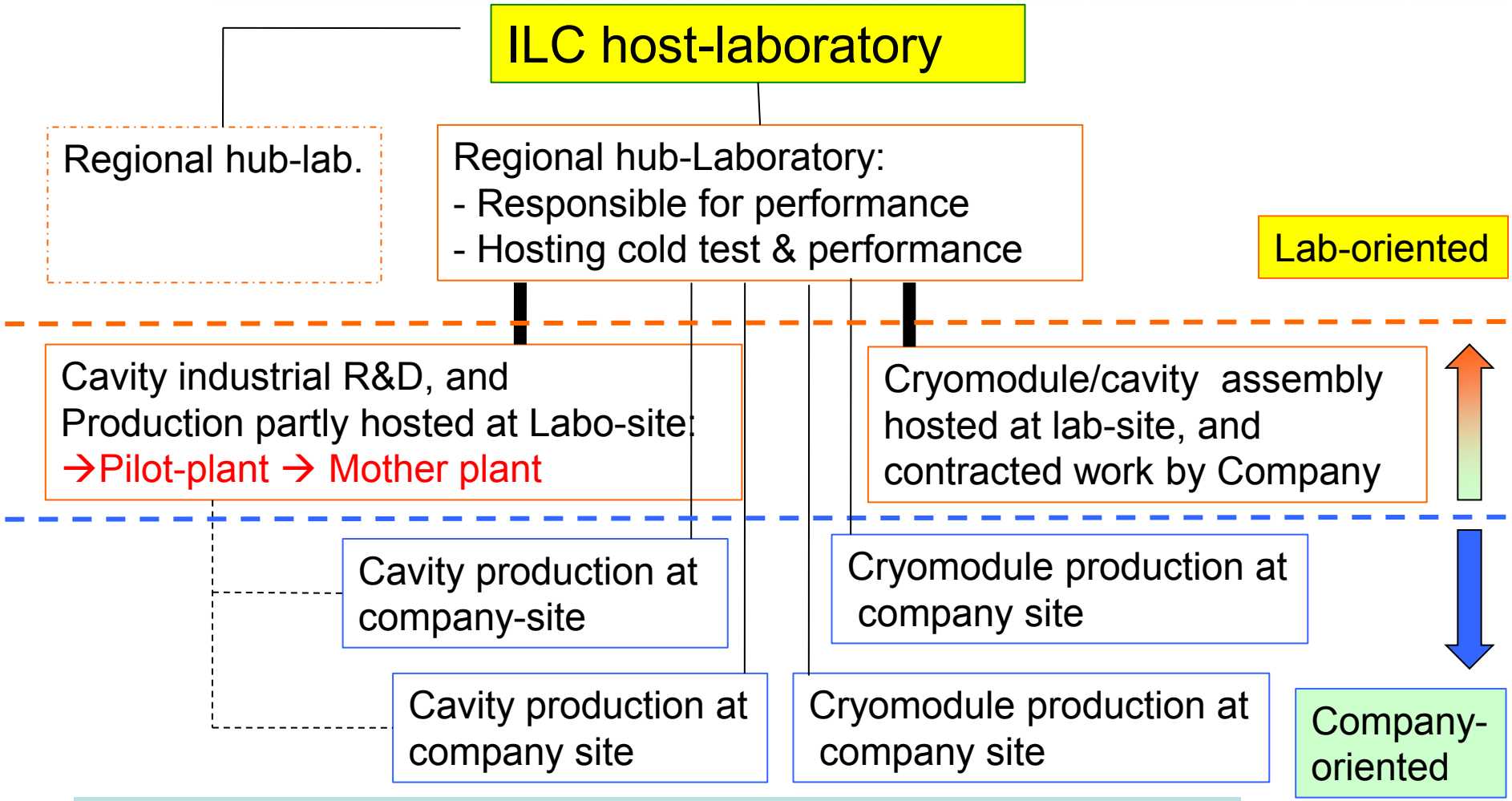

- **Lab responsible performance,**
- **Company responsible for 'build-to-print manufacturing**

Possible Models of Industrialization

Possible work sharing	Commercially supplied, relying on market	Region/ Laboratory responsible	Notes, constraint
# of participants	1: possible , ≥ 2: desired	≥2: most likely	
Cavity:			
Nb and raw material	Yes		
Main cell, He-Jacke	Yes with care		High Pressure Code
End-group, HOM etc.	Yes		
Input Coupler, Tuner	Yes		
Surface Process	Yes /Possible	Yes/Possible	
Integration		**Most Likely**	High Pressure Code
Cavity Perform.. Test		**Most Likely**	**Lab should be responsible**
Cryomodule:			
Vacuum vessel	Yes		
C.M. component	Yes with care		High P. code
Cavity-CM Assembly		**≥2: Most likely** **1: special case**	
Cryomodule test		**Most likely**	**Lab should be responsible**

Cavity Factory Layout Study

Assuming KEK to host a 'Leading Factory'

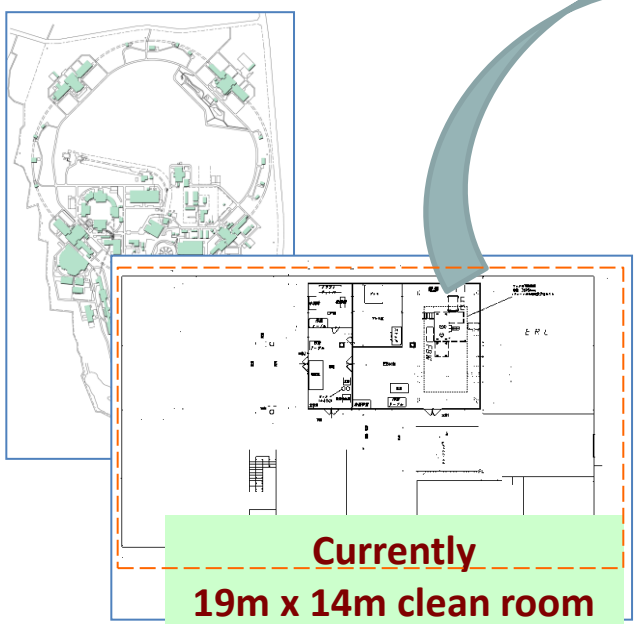

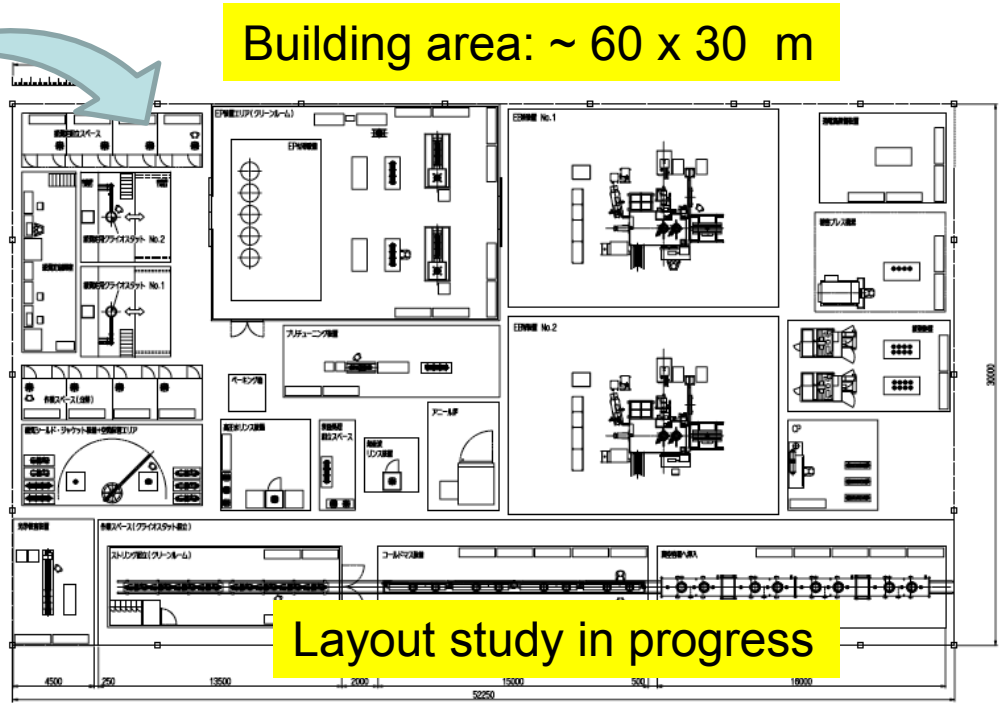

A proposal for Hub-Lab taking roles of:

- Industrial Technology development center in R&D stage, extendable for further industrial R&D beyond TD Phase (for example, scoping 1 TeV upgrade),
- 'Leading factory' as 'mother plant' to lead industrialization effort:
  - Production capacity of **~ ¼ of 20 %** (**~ 150** cavities/year, max.)

Cryomodule Assembly Factory Layout

図 8 ：クライオモジュール建屋レイアウト(案)

条件 ： 昼勤務のみで月産7台を想定

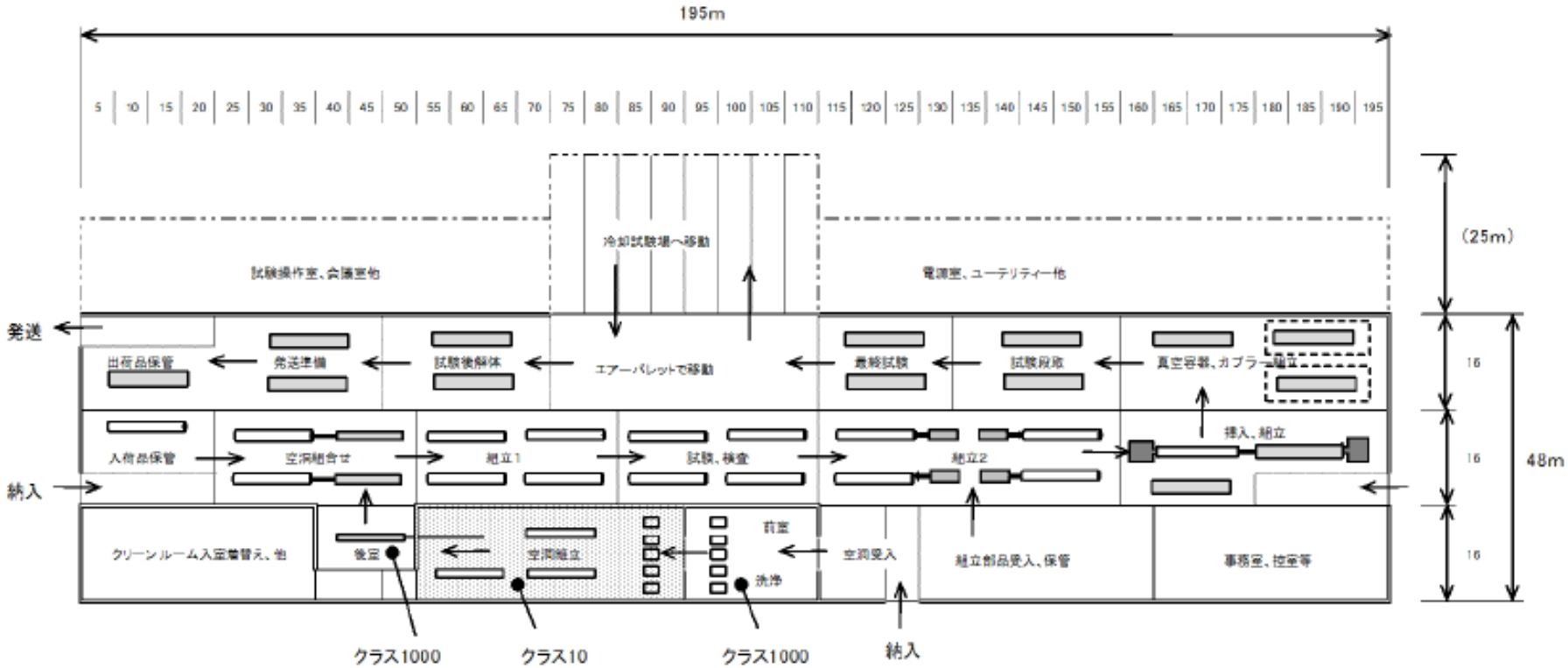

部分組立工場（回収管と上シールド板組立試験）

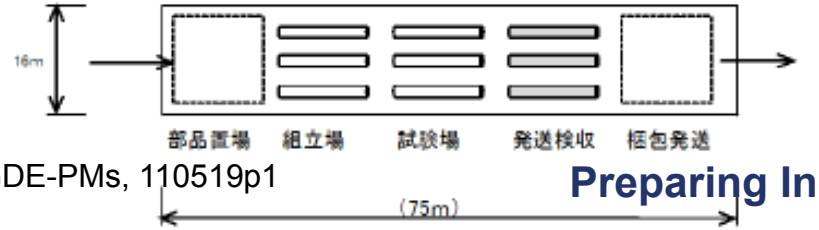

- **Production: 20 % fraction, 6 years**
- **Factory area: ~ 200 x 50 m**

Preparing Industrialization

Technical Management

- **Regional hub-laboratories**
  - technically coordinate regional efforts in cooperation with other regional laboratories
- **Contracts with industry**
  - may be managed by the hub-laboratories or regional laboratories according to funding management,
- **Procurements**
  - need to be open for international and inter-regional industrial participations to keep fair opportunities and competitions.

Technical guidelines

- **Baseline technical designs**
  - with best-cost effective way, to be determined in the Technical Design Report
- **'Build-to-print manufacturing,**
  - keeping plug-compatible design and fabrication for cost-effective approach,
- **Multiple, compact scale production model,**
  - Multiple fabrication factory/line and longer construction period make the factory investment scale to be much practical and predictable, based on experience in EXFEL,
  - Multiple 2~3 x 'EXFEL production scale production' , and 2 x long construction period can realize the ILC industrialization slace to be much reasonable.
    - 20 / 2 / 3~5 → factor 3 ~2 investment/location can realize ILC

Progress and Further Plan in Communication with Industry

- **1st cycle (by April 2011):**
  - GDE visits industrial partners to explain 'request of information', in Feb. ~ April, 2011
  - GDE expects responses from industrial partners, by the end of April, 2011 → done
- **2nd cycle (by July 2011):**
  - GDE individually communicate with the industrial partner, and propose some ways of cost-effective approaches,
  - GDE expect their responses and evaluation by July,
- **3rd cycle (by November 2011):**
  - GDE scopes the cost estimate update.

Summary and Further Plan

- **Communication with industry in progress**
  - Industrial response being analyzed,
  - Further communication to be extended, in 2011,
- **Specific study on industrialization model has been made or in progress**
  - with small contract,
- **The 2nd industrial workshop and communication**
  - to be held in Chicago, July 24, as SRF11 satellite meeting,
- **Communication with potential regional hub-laboratories is important to reach .**

Acknowledgement

- **We would thank:**
  - *Dr. H. Weise and DESY team for their guidance and kindest cooperation, based on EXFEL experience, for our industrial study, cost estimate, and communication with key companies around the world,*
  - *SCRF companies those who are kindly providing us sensitive information, at this stage,*
  - *All Institution participating to ILC-GDE, and GDE SCRF collaborators for their cooperation to progress the industrial study*

backup

Accelerator Design & Integration

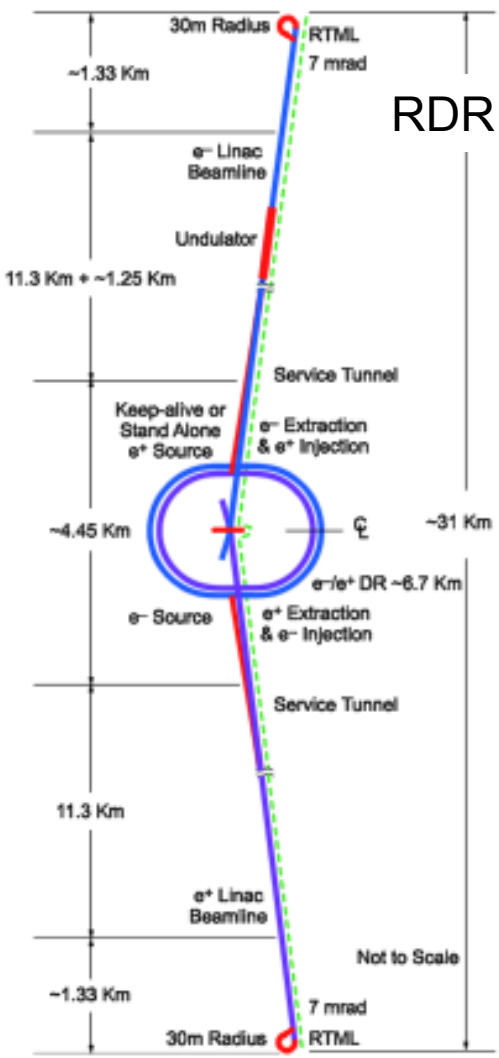

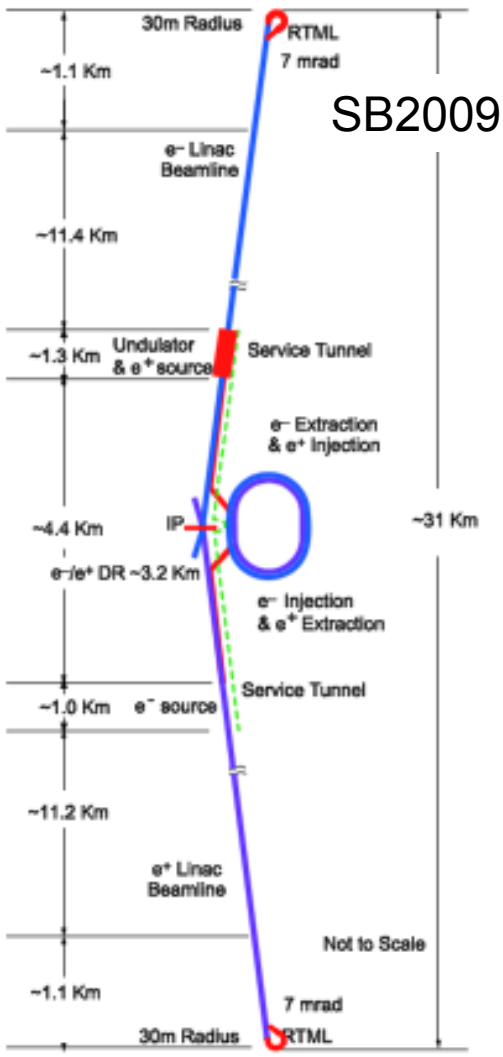

- **2009 Design Studies**
  - on-going
- **Cost Constraint**
  - 'Global' Value Engineering
- **Towards an agreed-upon baseline for the TDR**
  - Top-Level Change Control Process (**TLCC**)
  - Communication with stakeholders (e.g. Physics & Detector groups)

SCRF Cost Effective Production

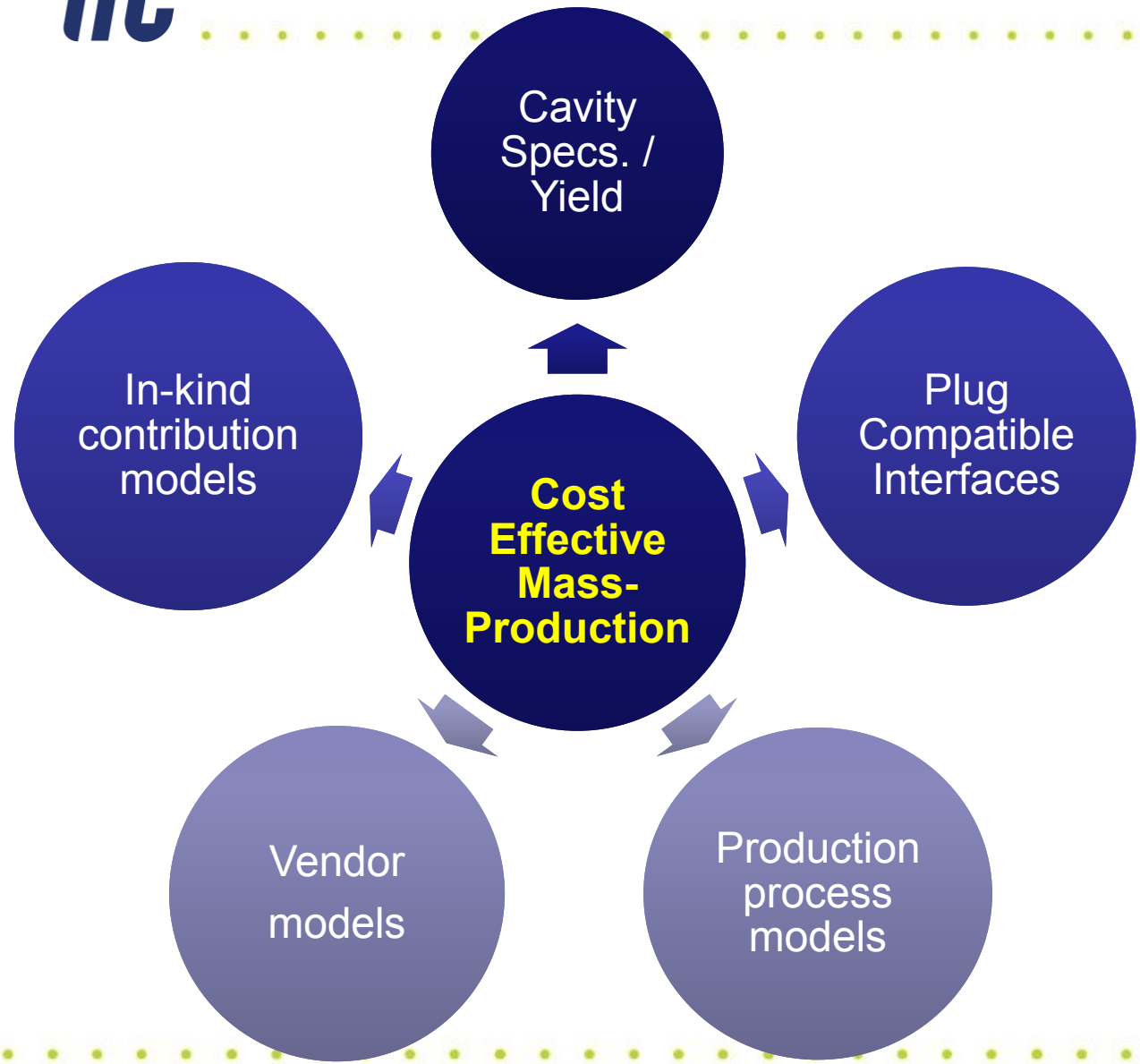

Emphasize global approach (Multiple region mass-production)

- Critically important TDP2 activity
- Learn from XFEL experience
  - 5% ILC
- Develop realistic models on which to base cost estimate
  - With industry

Global Cooperation in a Production Model

- **Multiple vendors contribute to the manufacturing w/ a typical fraction of one quarter to one half ,**
  - A model: RI and Zanon for E-XFEL manufacturing
- **Multiple laboratories host the integration and test**
  - A model: Saclay for E-XFEL cryomodule assembly and DESY for cavity/cryomodule tests,
  - Multiple hub-laboratories may be adequate for the ILC
- **In case, construction period assumed to be**
  - twice (or more) of the XFEL construction (5 ~ 6 year for ILC),
  - Production rate can be reduced to be a half
    - Factor: 20 to 10,
  - If four hub-laboratories host and share the work, production/test rate becomes
    - Factor :10 / 4 = 2.5
    - → 2.5 x XFEL production rate may be considered

Preparation for the ILC SCRF Cavity and Cryomodule Industrialization

- Requests for Information -

ILC-GDE Project Managers

To be discussed during visiting companies

Request for Information: 1

1. Cost comparisons:

- **We expect relative cost estimate under the following cases in the production process:**
  - Fraction of production: three cases of 20%, 50%, and 100 %
  - Production periods: two cases of 3 years, and 6 years,
- **Please provide relative costs for the above six cases, and we would appreciate your advice how we may expect cost reduction in comparison with the current global status, such as European XFEL program or any other projects currently on going.**
- **Please provide a practical cost estimate (with absolute values) in one of the production models which your company may be adaptable or in your preference, with reasonable breakdown for sub-components, such as center-cell, end-group, He-jacket including assembly and integration cost (noted; 2011-3-2). (The cost for the high-pressure code stamp to be excluded)**
- **We would also appreciate your advice, if the set-up and pre-production period of two years is appropriate from your view point.**

Request for Information: 2

2. Factory-site location:

- **We may expect either case of the mass-production sited at (a) companies or (b) laboratories**

  to host the manufacturing facilities.
- **We may need to figure out the best factory site locations, probably globally distributed, in the following categories:**
  - 9-cell cavity manufacturing and integration,
  - Cryomodule assembly,
- **Please advise us on the optimum strategy for locating manufacturing and assembly facilities.**

Request for Information: 3

3. Sharing responsibilities for the cost-effective production:

- **We may expect to share responsibilities to provide some components.**
- **We are assuming for laboratories to directly procure raw material and some sub-components and to supply them to the companies those who are in charge of the cavity integration and and cryomodule assembly. The possible candidates are as follows:**
  - For Cavity manufacturing and integration
    - Nb, NbTi, and some specific raw material,
    - Tuner,
    - Input-coupler,
    - Some other specific sub-component, with assumption to reduce the cost.
  - For Cryomodule assembly
    - Cavity
    - SC Quadrupole magnets
    - Cold-mass support and some standard cryo-components,
    - Vaccum chamber

- **Please advise us on the best strategy for raw material procurement.**

Request for Information: 4

4. Deliverables from 'build-to-print' specification:

- **We expect, in current assumption, that the deliverables are the integrated cavity including LHe jacket and cryomodule assembly, with minimum acceptance criteria, such as:**
  - Mechanical inspection, including dimensional, surface visual inspection, and plug-compatible interface inspection,
  - Electrical (RF) inspection for some components (such as cell and HOM, at room temperature),
  - High-pressure code inspection (leak-tightness, pressure sustaining etc).
  - QA sheet for dissolved Nb in chemical process

- **We would like to ask your advice on deliverable specifications including key boundary conditions.**

Request for Information: 5

5. Do we need to organize 'Consortium' ?

- **Please advise us on the following questions:**
  - Is it advisable to organize a consortium for best effective mass production and to seek for the best effective cost saving?
  - If yes, which kind of consortium may be advised?

Global Cooperation in a Production Model

- **Multiple vendors contribute to the manufacturing w/ a typical fraction of one quarter to one half ,**
  - A model: RI and Zanon for E-XFEL manufacturing
- **Multiple laboratories host the integration and test**
  - A model: Saclay for E-XFEL cryomodule assembly and DESY for cavity/cryomodule tests,
  - Multiple hub-laboratories may be adequate for the ILC
- **In case, construction period assumed to be**
  - twice (or more) of the XFEL construction (5 ~ 6 year for ILC),
  - Production rate can be reduced to be a half
    - Factor: 20 to 10,
  - If four hub-laboratories host and share the work, production/test rate becomes
    - Factor :10 / 4 = 2.5
    - → 2.5 x XFEL production rate may be considered

Cavity Manufacturing: Summary

- **A possible model**
  - Cavity mechanical production with LHe Jacketing
  - KEK host and lead 'mother plant' to share ~ ¼ of 20 % of ILC cavity production (~ 150 cavity/year)
    - Continuous effort to seek for the best cost-effective production with keeping quality control,
  - KEK host 100 % chemical process,
  - KEK host 100 & cold (vertical test),

- **Subject for further study**
  - Further optimum factory configuration
    - To investigate a separate vertical test site, and to seek for further production capability

Plug-compatibly of Cavities

Important for Global Cooperation

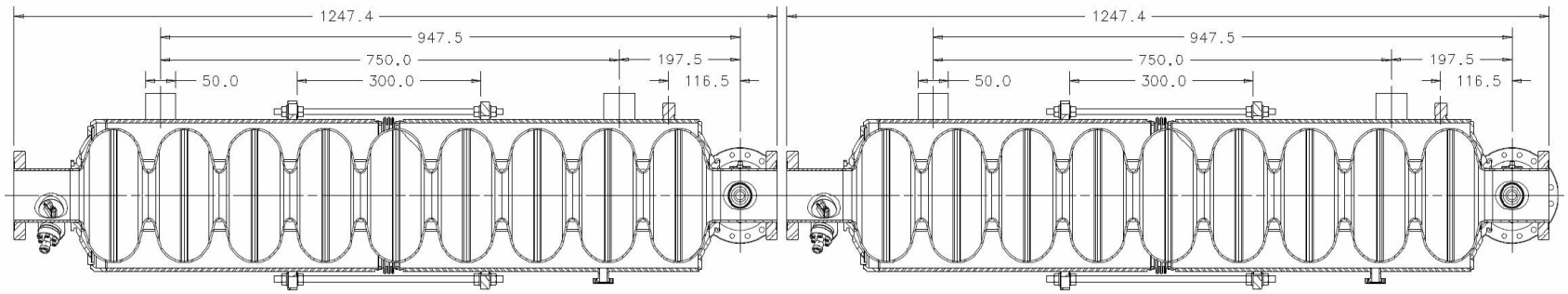

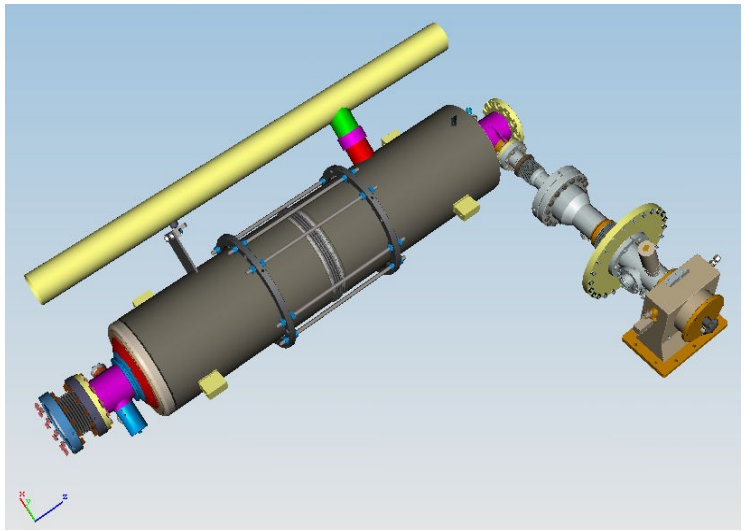

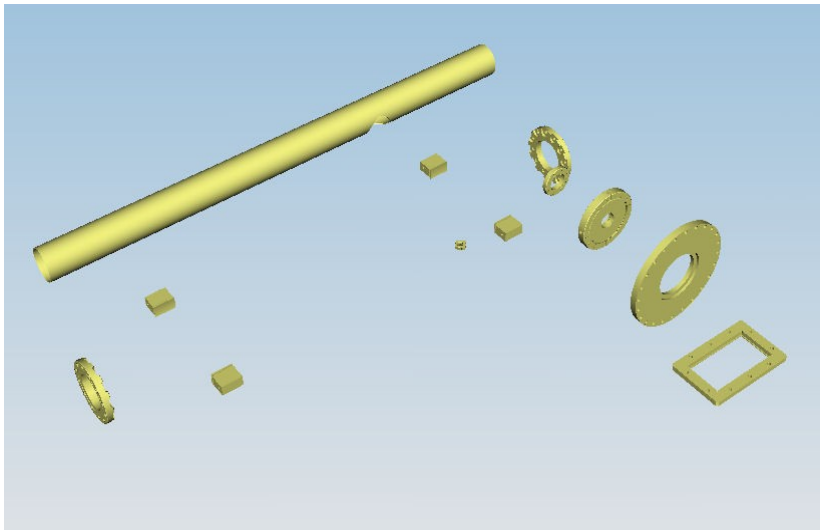

Plug-compatible interface need to be established

Cavity Fabrication (TESLA Cavity)

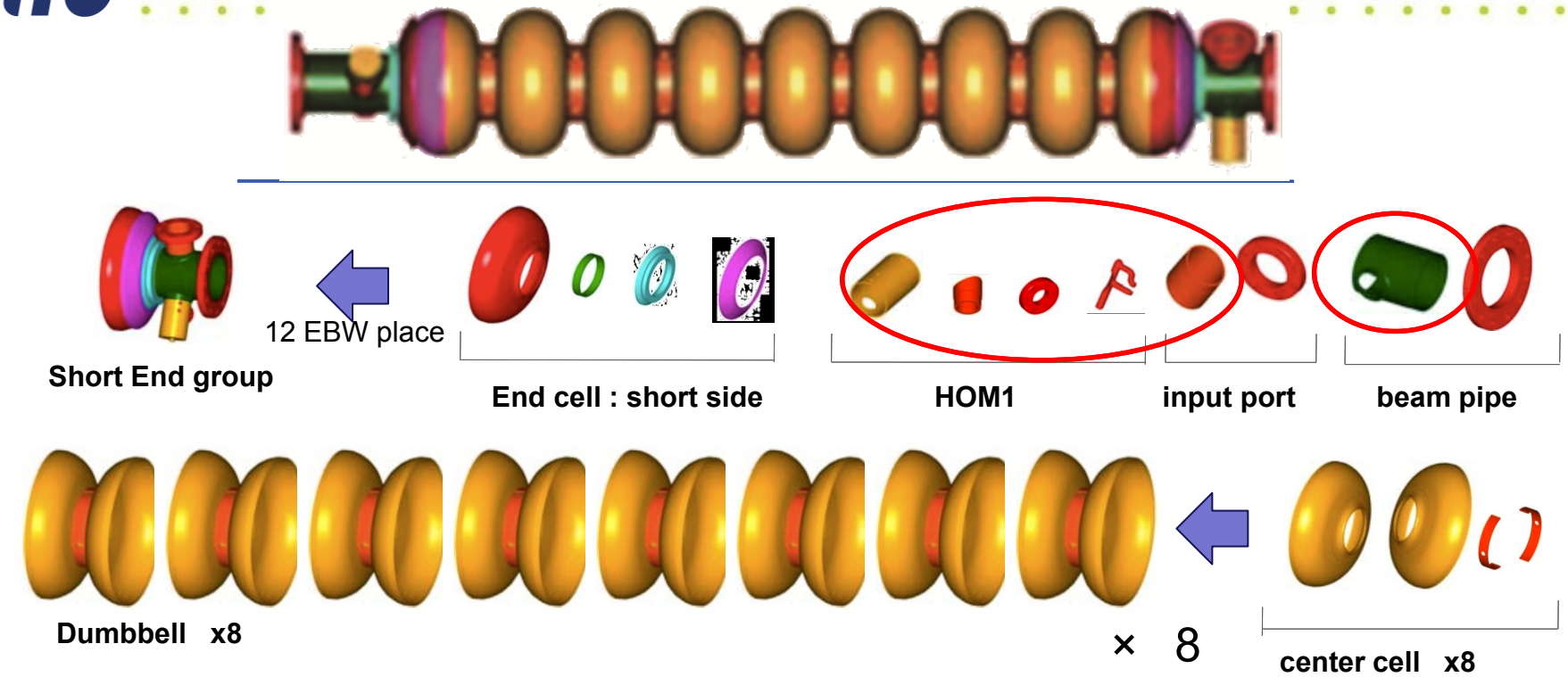

56 parts:

- Nb = 46, Nb-Ti = 10, by using press, de-burring, machining

75 Electron Beam Welding (EBW) :

Cryomodule Assembly Process: an example

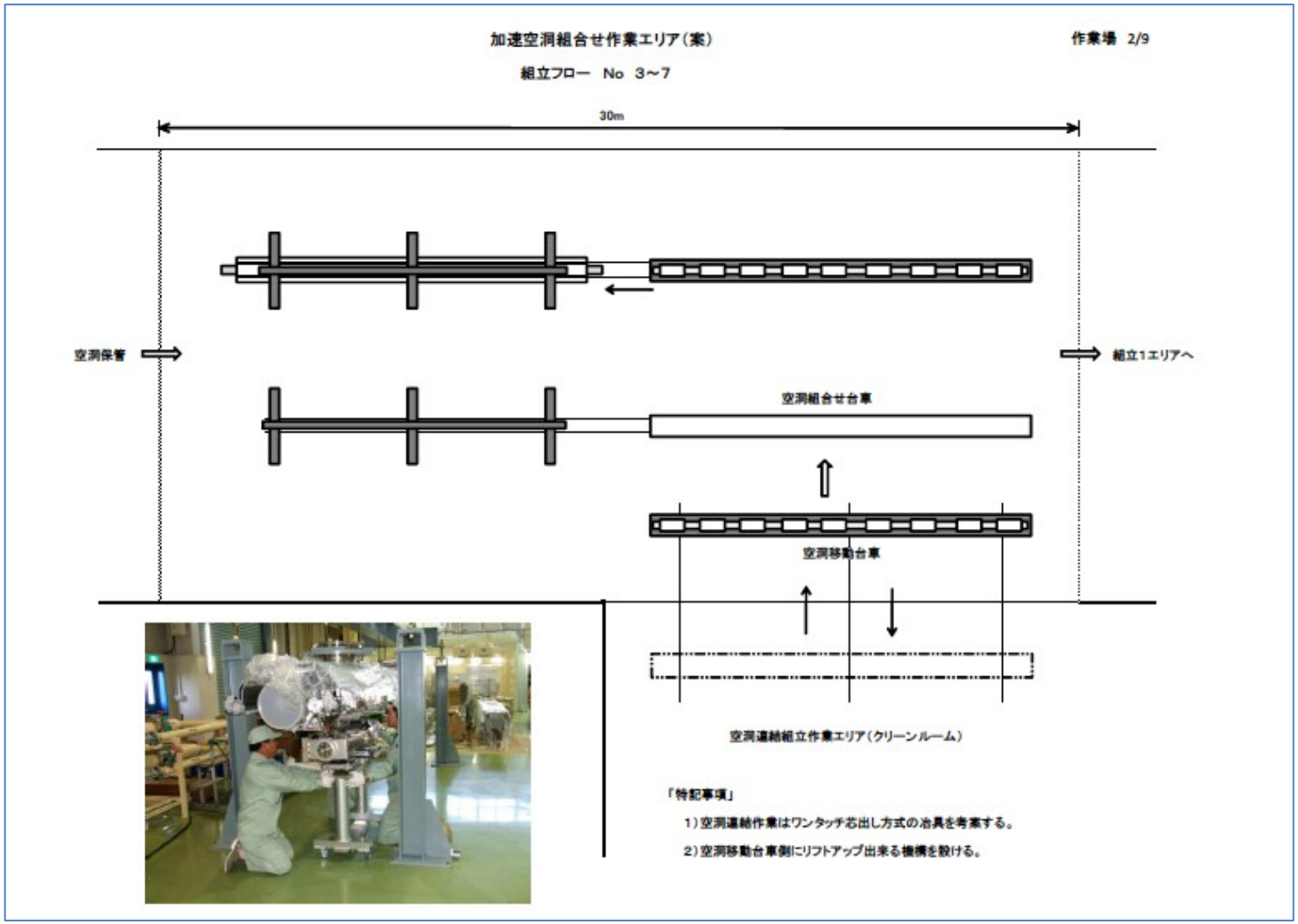

- **Cavity-string installation into Vacuum vessel**

Cryomodule Fabrication Model

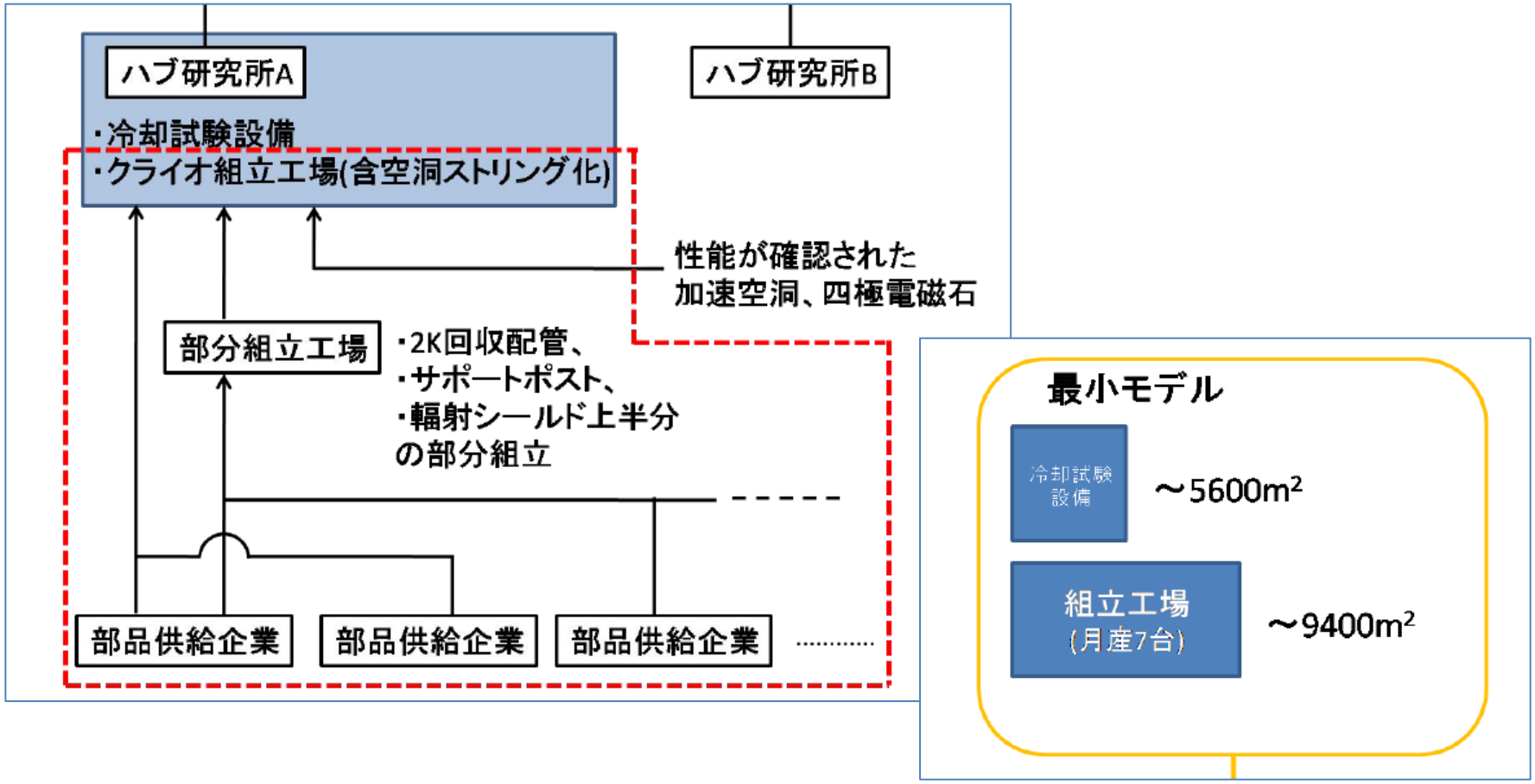

- **Assumption: 20 % fraction and 2+6 years period**

XFEL Cryomodule Assembly

O. Napoli

hosted by CEA/Saclay

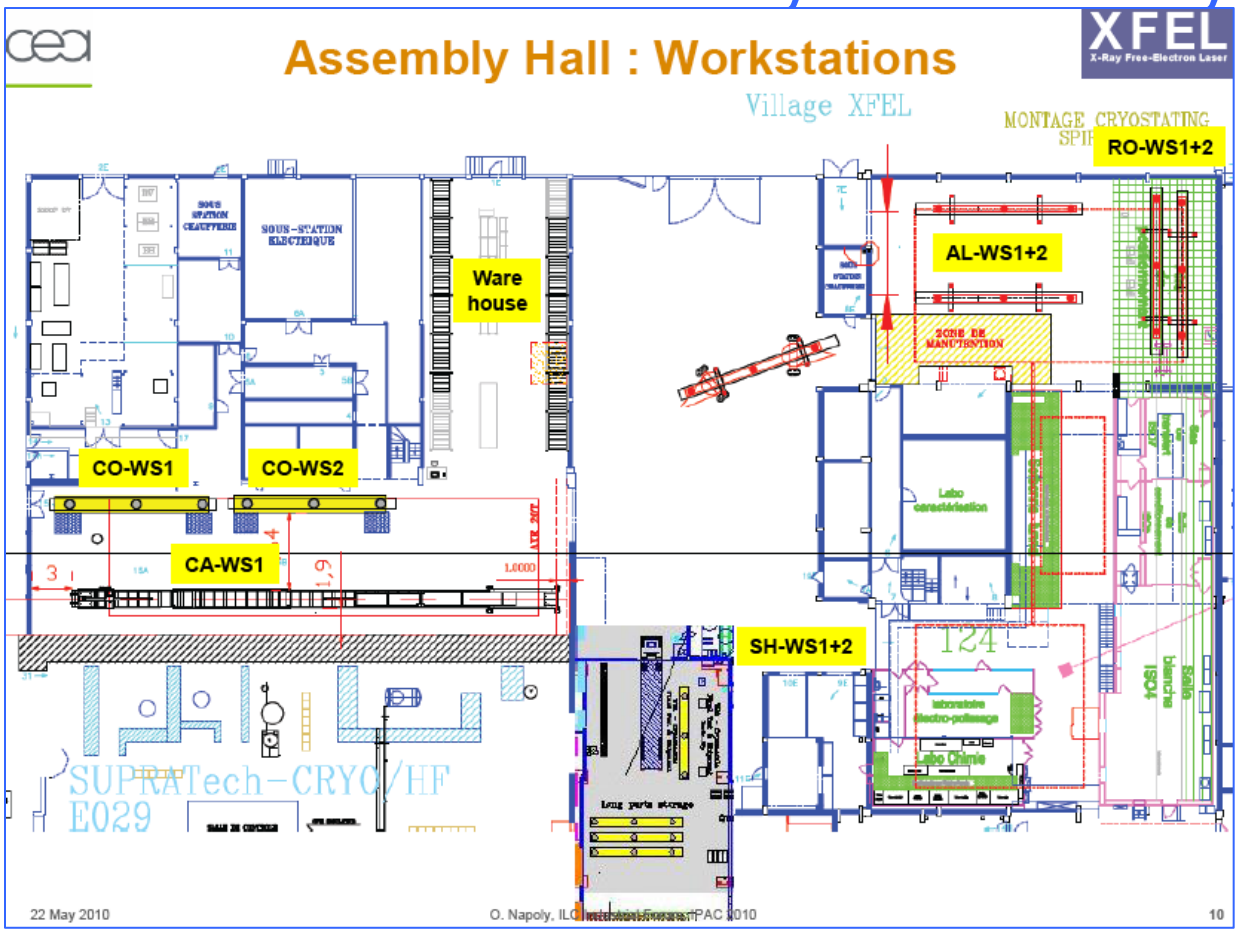

- **Assembly hall being prepared at Saclay**

Learning at DESY, Oct. 2010

visiting XFEL cavity / cryomodule test station

- **If we may have 2 ~ 3 of this test station, the ILC cavity/cryomodule test can be managed.**
- **We may consider factor ~ 3 instead of factor 20 (= 16,000 x ~800)**