ILD status report

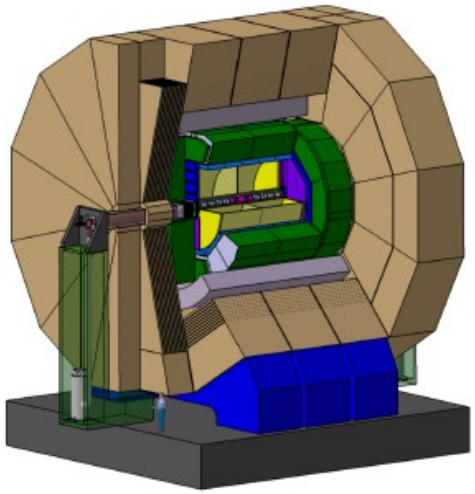

Yasuhiro Sugimoto
KEK
for the ILD concept group
@ILC PAC Meeting Taipei

Outline

- ILD detector and group
- Recent ILD-related events
- Progress towards DBD
  - RD's guideline and ILD's line
  - Software baseline
  - Benchmark processes and analysis status
  - Hardware baseline
  - Report to IDAG: Detector R&D status and plan
  - Detector integration
  - Site-dependent design
- Resource issue
- Summary

ILD Detector

- International Large Detector
  - General-purpose large detector optimized for particle flow algorithm of jet energy reconstruction
  - Si-based vertex detector and inner/forward trackers
  - Gas-based central tracker: TPC
  - Ultra high granularity imaging calorimetry at large radius
  - High B field of 3.5 T
  - Hermetic coverage by forward calorimeters

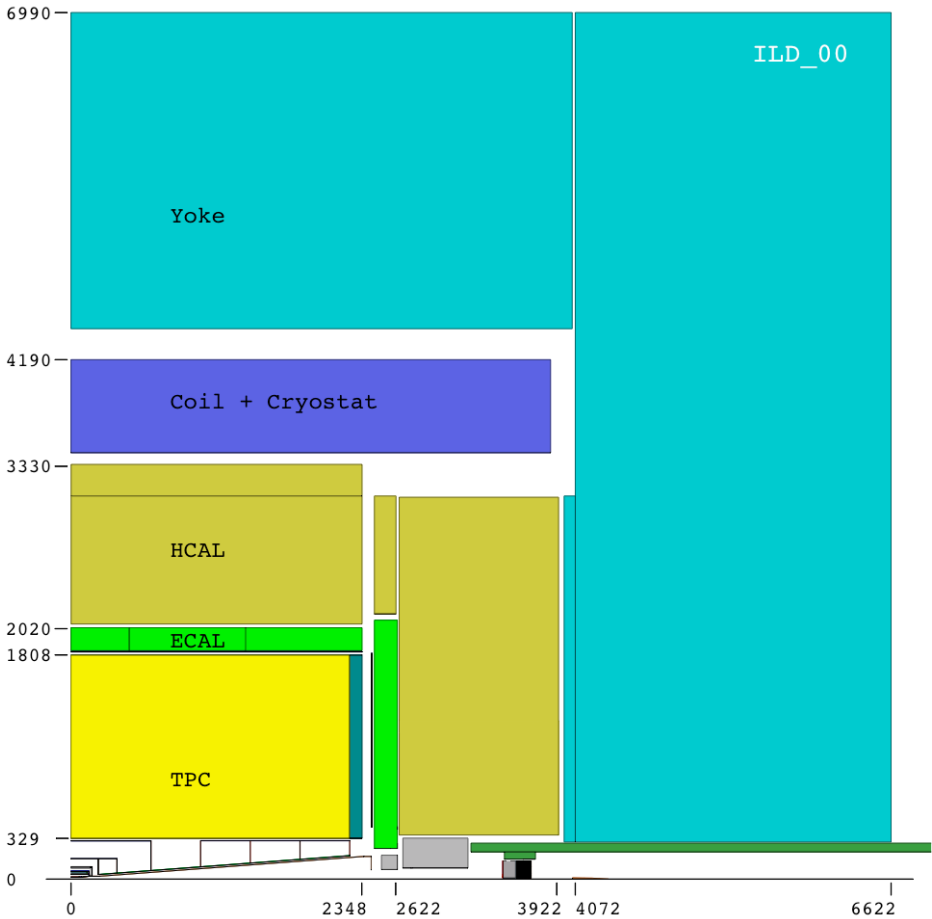

ILD group

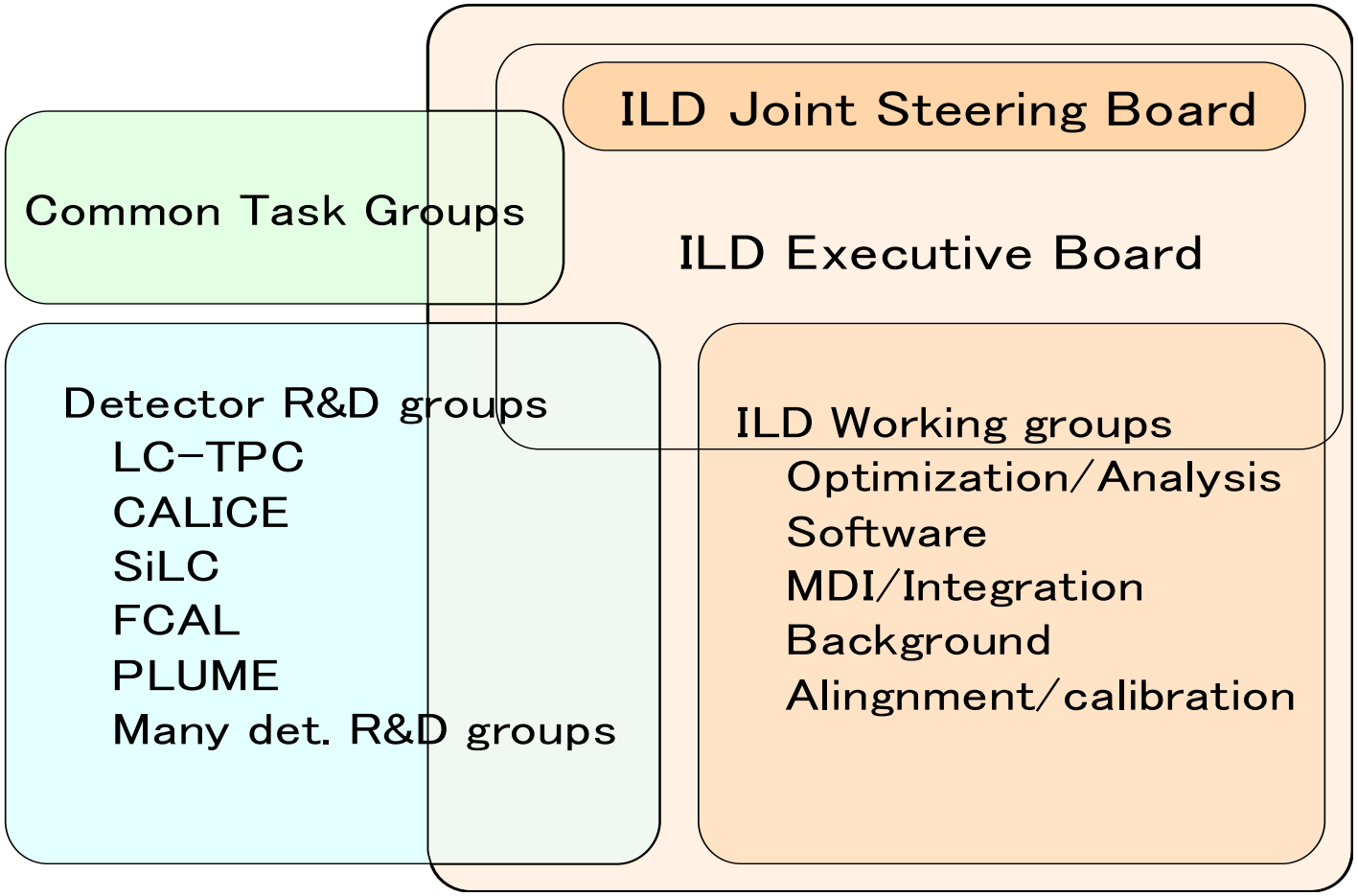
ILD Joint Steering Board
Common Task Groups
ILD Executive Board
Detector R&D groups
LC-TPC
CALICE
SiLC
FCAL
PLUME
Many det. R&D groups
ILD Working groups
Optimization/Analysis
Software
MDI/Integration
Background
Alingnment/calibration

Recent ILD-related events

- 2011/1/18-21: BAW-2 @SLAC
  - New beam parameters agreed by detector groups
  - We are still waiting for official parameters for 1 TeV
- 2011/3/11: Earthquake in east Japan
  - No human damage for ILD collaborators
  - Some impact on ILD activity in Japan
    - Limitation of electric power (recovered to some extent now)
      → delay of software work using KEK computers
      → delay of detector R&D work at KEK and Tohoku University
    - Some engineering people are occupied with repairing work at KEK and J-PARC, and have very limited time to spend on ILC (until autumn?)

Recent ILD-related events

- 2011/3/19-23: ALCPG11 @Eugene
  - Many Japanese colleagues cancelled participation due to the earthquake
  - Interview with IDAG
    - We reported on the ILD status and plan for DBD to IDAG (homework given at the IWLC2010)
  - MDI session
    - ILD and SiD agreed on the push-pull scheme to use “platforms”
  - ILD session
    - Progress reports of the working groups

Recent ILD-related events

- 2011/4/19-20: ILD regional (EU) Integration meeting @LAL-Orsay
  - Review of the progress and discussion on the ILD detector integration issues
- 2011/5/9-10: Linear collider power distribution and pulsing workshop @LAL-Orsay
  - Power Pulsing (turn on the detector electronics only during the bunch train) is the key technology to suppress power consumption and minimize the material budget (and space) of cooling devices and cables of LC detectors
  - The experts of ILD, SiD, and CLIC (+LHC) detectors get together and discussed on this issue

Recent ILD-related events

- 2011/5/19-20: ILC PAC @Taipei
- 2011/5/23-25: ILD Workshop @LAL
  - Originally planned to be held at KEK
  - Fukushima NPP accident made it difficult for many collaborators to visit Japan
  - Main purpose of this workshop
    - Review the status and plan toward DBD
    - Define the ILD “software baseline” for mass production of simulation data
  - Pre-meetings on Sunday
    - Software meeting
    - MDI/Integration meeting
  - Participants from SiD and GDE-CFS to discuss about push-pull issues

Progress toward DBD

- Main goal of the DBD
  - Strengthen the physics case for ILC/ILD
    - Physics analysis extended to 1TeV → New benchmark processes
    - Cover missing physics scenario
    - Improve existing (LOI) analysis
    - Some input from LHC?
  - Present a realistic integrated detector
    - Improve designs of sub-detectors beyond the conceptual state
    - Present a fully integrated ILD detector

RD's guideline for DBD

1. Demonstrate proof of principle on critical components
   When there are options, at least one option for each subsystem will reach a level of maturity which verifies feasibility
2. Define a feasible baseline design
   While a baseline will be specified, options may also be considered
3. Complete basic mechanical integration of the baseline design accounting for insensitive zones such as the beam holes, support structure, cables, gaps, or inner detector material
4. Develop a realistic simulation model of the baseline design, including the identified faults and limitations
5. Develop a push-pull mechanism, working out the movement procedure, time scale, alignment and calibration schemes in corporation with relevant groups
6. Develop a realistic concept of integration with the accelerator including the IR design
7. Simulate and analyze updated benchmark reactions with the realistic detector model, including the impact of detector dead zones and updated background conditions
8. Simulate and study some reactions at 1TeV, including realistic higher energy backgrounds, demonstrating the detector performance
9. Develop an improved cost estimate

ILD's line towards DBD

- For mass production of simulation data, we will define "one" baseline detector ➔Software baseline
- For sub-detector options which were not included in the software baseline but desired to be included in hardware options, simulation study to demonstrate the performance should be done with less amount of data samples
- In 2012, hardware review will be done, and certification as one of the "options" for the baseline design or "alternatives" will be made for each sub-detector candidate ➔Hardware baseline

Tentative ILD roadmap

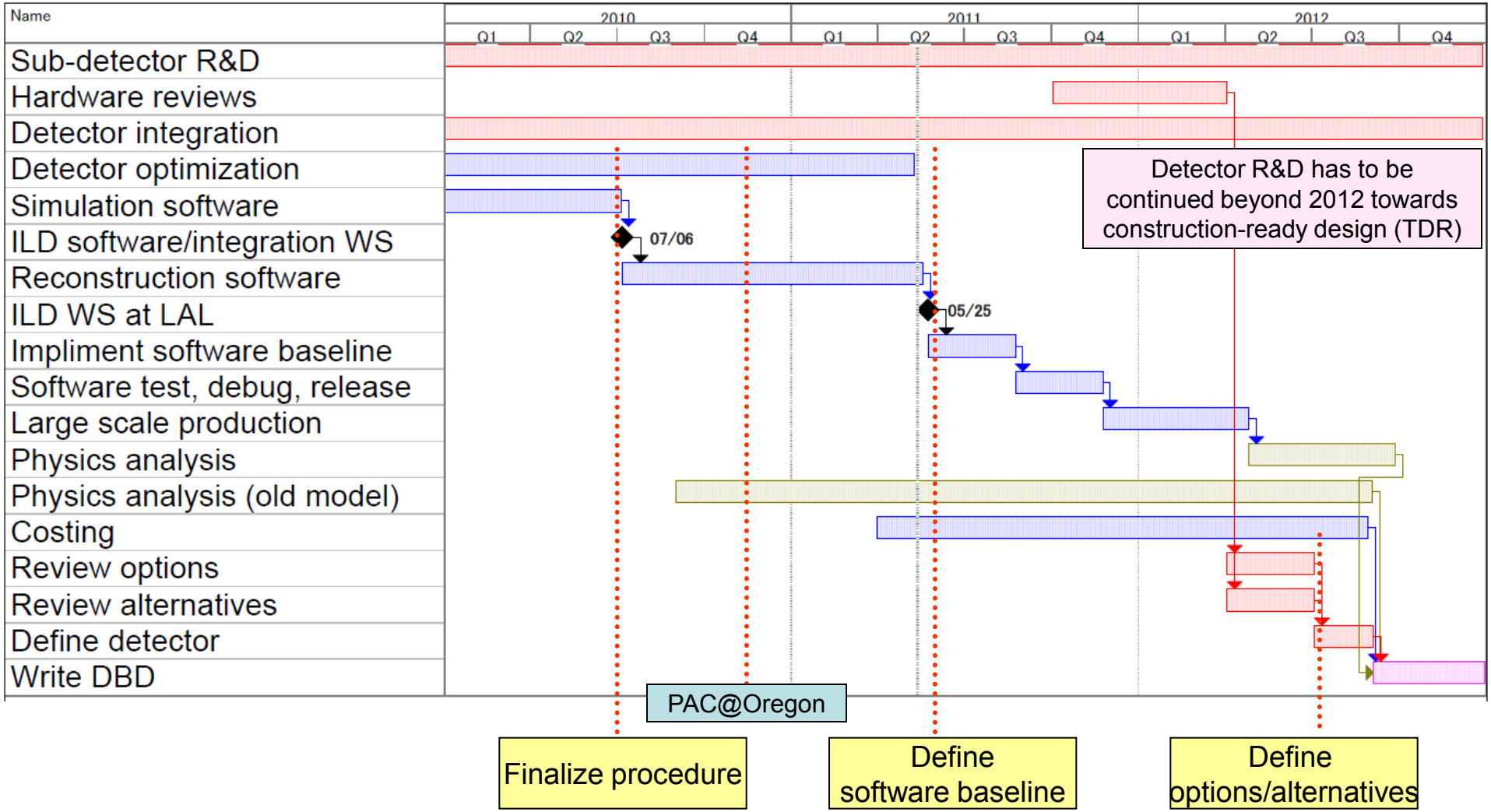

Software baseline

- Guideline for sub-detector options to be the “software baseline”
  - Debugged model in MOKKA (GEANT-4 based simulator for ILD) exists
  - Reconstruction code with demonstrated performance exists
- ILD Workshop
  - Major goal of the ILD Workshop next week is to define the software baseline as far as we can get the consensus
  - However, progress of the software tools might be slow (we will review them also) due to lack of manpower and it might be difficult to define the software baseline completely at this ILD workshop

Benchmark processes

- New benchmark processes for DBD have been selected by Physics Common Task Group
  - e+ e- → ν ν H : Higgs branching ratio @1TeV
    - Test detector performance for simplest context
  - e+ e- → t t H : Top Yukawa coupling @1TeV
    - Detector performance for complex (8 jet) events
  - e+ e- → W+ W- : In-situ polarization measurement @1TeV
    - Detector performance for high energy jet
    - Capability of forward detector elements
- Beside these reactions, ILD wishes to analyze more reactions with a new (realistic) detector model
  - Processes studied in LOI
  - New processes
  - Available CPU power is one concern (LHC is using a lot of CPU)
  - Human resource is also an issue

Analysis in ILD for DBD

Analysis	Ecm	
Z H → l+ l- X	250 GeV	LOI
Z H : Br(H→bb/cc/gg)	250, 350 GeV	LOI, SB2009
ν ν H : Br(H→bb/cc/gg)	1 TeV	New benchmark
Little Higgs with T-parity	1 TeV	LOI
Top physics	500 GeV	LOI
W e ν, Z Z, Z ν ν	1 TeV	LOI
Z H H	500 GeV	(LOI)

Analysis in ILD for DBD

Analysis	Ecm	
t t H	500 GeV, 1 TeV	New benchmark
Long lived stau	500 GeV	New
WIMP search in nγ+invisible	500 GeV	LOI
Bi-linear R-parity violating SUSY	500 GeV (?)	New
SUSY point 5	500 GeV	LOI
SUSY SPS1a'	500 GeV	LOI, SB2009
W+ W-	500 GeV, 1 TeV	New benchmark

Hardware baseline

- Baseline, options, and alternatives
  - ILD will not attempt to exclude sub-detector technologies (as long as they are applicable to ILD) or make a down-selection
  - If a sub-detector technology satisfies certain criteria, it will be considered as one of the sub-detector “options” of ILD
  - Sub-detector technologies which are not demonstrated to satisfy the criteria but still seems promising will be categorized as “alternatives”
- The hardware review process will start late 2011 or early 2012
- Detector “hardware baseline” which includes several sub-detector options will be defined in Q3 of 2012

Possible hardware options

Sub-det.	Possible technologies			
Vertex det.	CMOS	FPCCD	DEPFET	Others?
Si tracker	Single sided strip	Pixel	Double sided strip	
TPC	GEM	MicroMegas	Pixel	
ECAL	W-Silicon	W-Scinti	Hybrid	
HCAL	Analog	Digital		
Muon	Fe-Scinti	Fe-RPC		
FCAL	W-Silicon	W-Diamond		

R&D plan

- R&D status & plan of each sub-detector was reported at the IDAG interview in ALCPG11 http://ilcagenda.linearcollider.org/getFile.py/access?contribId=301&sessionId=32&resId=0&materialId=slides&confId=4572

	R&D Plan	Group
VTX	Full scale ladder prototype (mechanics) including cooling concept R&D for several chip technologies	CMOS, DEPFET, FPCCD, PLUME
Si	Test of single-sided strip sensors and edgeless sensors Readout chip prototype	SiLC
TPC	GEM and μMEGAS readout with multi-module large prototype Pixel readout demonstration under realistic conditions Model for advanced end-plate demonstration	LC-TPC
ECAL	Extensive test beam data Demonstration of system integration Second generation prototype	CALICE

R&D plan

Sub-det.	R&D Plan	Group
A-HCAL	Extensive test beam results Second generation readout design and test Second generation prototype	CALICE
D-HCAL	Extensive test beam results Establish feasibility including readout concept Second generation prototype	CALICE
Muon	Extensive simulation and optimization Scintillator readout with SiPM prototype Mechanical design	(DESY)
FCAL	Tests of sensors and readout chain	FCAL

Power-pulsing capability has to be demonstrated for most of the sub-detector technologies

Detector integration

- Realistic detector integration plan with realistic sub-detector design is required for DBD
- Detector integration design of ILD is gradually getting its shape

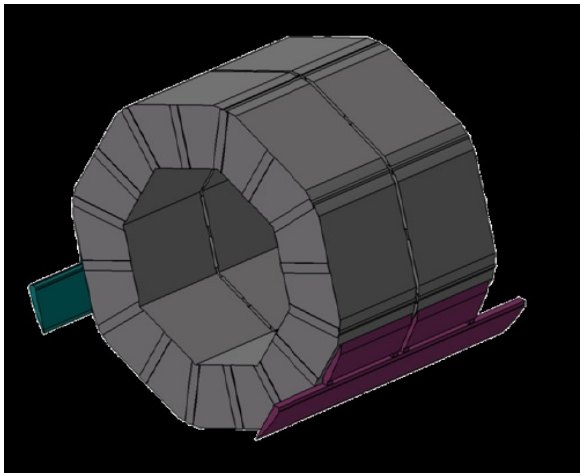

AHCAL CAD model

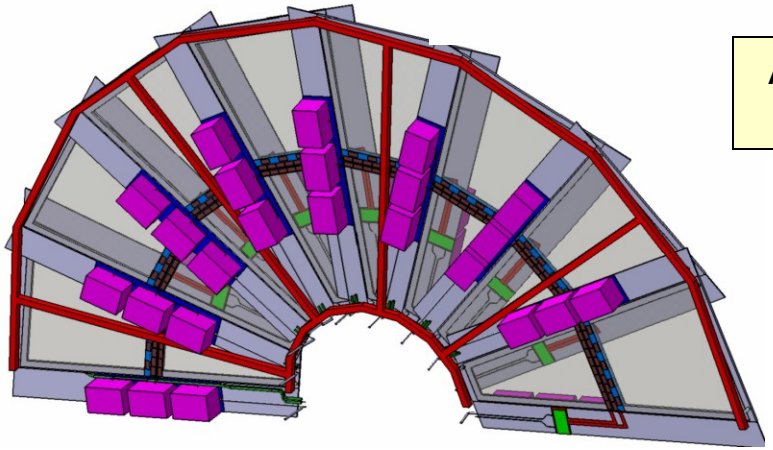

FTD design with elec/cables

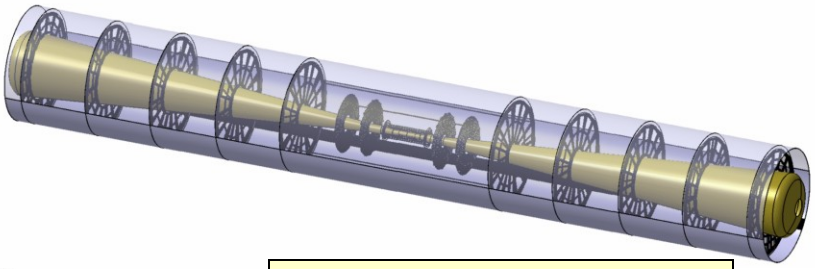

Assembly scheme of inner detectors

Site dependent design

- Mountain site study by GDE CFS group
- ILD modification for the mountain site
  - No vertical shaft
    - CMS style assembly impossible
  - ~1 km access tunnel instead of vertical shaft
  - Detector assembly
    - On surface → Underground
  - ILD barrel part
    - 3 slices → Single barrel
  - Location of cryogenic system for solenoid
    - Helium compressor on surface would be difficult → Underground
- These studies started in ILD

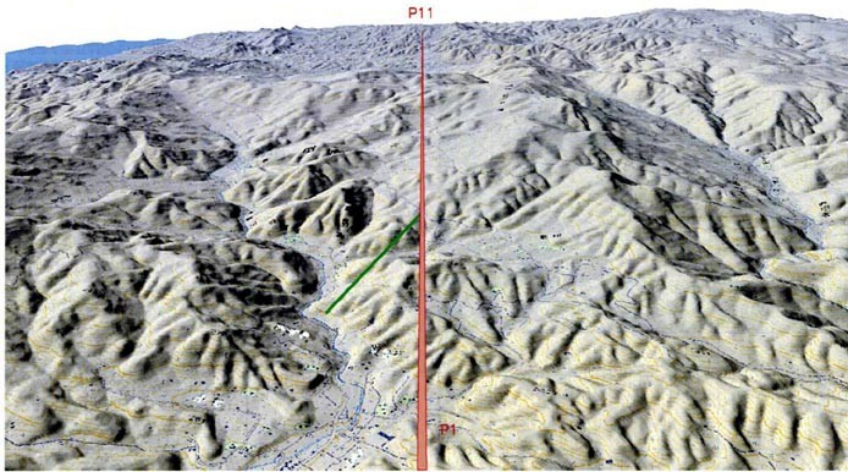

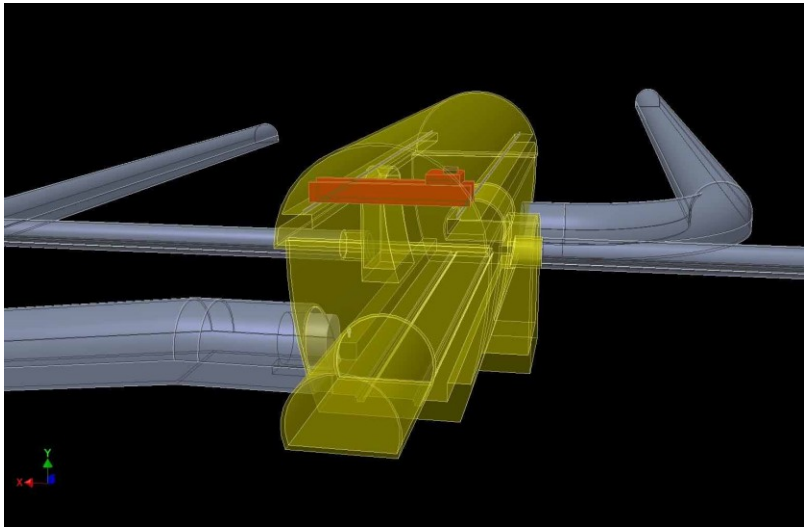

Resource issue

- Asia
  - Very limited support from KEK
  - 5 year JSPS funding program has expired at the end of March
  - We are applying a new 5 year program, and the result will become clear at the end of May
- Europe
  - AIDA project has been started
    - 3M€ out of 8M€ in total for LC
    - Substantial decrease compared to EUDET era
- North America
  - Situation for ILD remains difficult
    - No explicit support for ILD from national labs
    - NSF based grant for TPC and PFA study through Aug 2012
- Inter-concept collaboration to mitigate the resource crisis
  - PLUME collaboration: Low mass ladder R&D for vertex detectors
  - Combined Si-W ECAL and DHCAL test beam at FNAL (Apr. 2011) within CALICE collab.

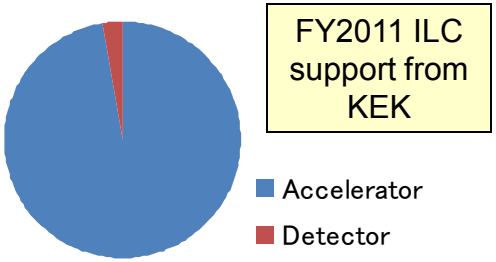

Summary

- ILD is steadily progressing towards the DBD
- Software baseline with more realistic detector model than LOI will be defined soon and we will get ready to mass production of simulation data
- ILD would like to analyze many physics processes for DBD in addition to the newly defined three benchmark processes in order to strengthen the physics case for ILC/ILD
- Hardware baseline of ILD will contain several sub-detector options which are evaluated through internal hardware review process
- Realistic design of sub-detectors which is necessary for the mechanical integration design of ILD is in progress
- Situation of resources for ILD study is still insufficient