Status of the ILC Detector activities

Project Advisory Committee

October 20, 2008

LPNHE,Paris

Sakue Yamada

How we started and how far we have reached.

- **Call for Letters of Intent and Creation of Research Director** (October 2007)

1. *Purpose of the LOI*
2. *Mandate*

- **Management structure**

  (Its directorate formed January 2008)

- ***Changed schedule*** (February 2008)
- ***Call for EOI*** *(March 2008)*
- *IDAG formation (March 2008),*

  and the first meeting (June,2008)

- **Plan and issues**

October 4, 2007

Call for Letters of Intent for ILC Detectors by ILCSC

The International Linear Collider Steering Committee (**ILCSC**) announces a call for Letters of Intent (LOIs) **to produce reference designs for the two ILC detectors**. These designs will be detailed in two Engineering Design Reports (EDRs) to be completed on the timeline of the machine EDR being prepared by the Global Design Effort.

The guidelines for the LOIs are presented in the attached document, and a public presentation of the WWS roadmap for detectors can be found in the LCWS07 web site.

The LOIs **should be received by the ILCSC not later than October 1, 2008** and **will be reviewed by an advisory body appointed with the approval of ILCSC**. **This body, together with a management team led by the ILCSC-appointed Research Director will start a process leading to the formation of two groups** capable of preparing the two engineering designs and the EDR documents.

Notes

- *"for reference design for two contrasting complementary detectors to be included in the project proposal"*

- **The groups need not to commit for construction.**

  But they need to carry out necessary R&Ds so that the selected technology for their detector designs become feasible

- **This is an unprecedented attempt.**

1. **The accelerator and detectors are very closely linked than any other cases.**
2. **The required quality of the detectors is very demanding.**
   E.g. separation and measurements of jets and precise measurement of the invariant masses of di-jets.
   (High performance of the entire system is required on top of that of individual component.)

Charges given to RD

- The RD will be responsible for the development of the experimental program of the ILC.
- In particular, **the RD will be responsible for devising the procedures that will result in two contrasting and complementary detector designs proposed by groups that are capable of completing detector engineering design reports (EDRs),**
- helping to secure the resources which are required by interacting with lab directors, funding agencies, and universities,
- endorsing major technical decisions by the collaborations,
- guiding the global detector R&D activities, as long as such management is required,
- **promoting the ILC project together with ILCSC and GDE.**

In order to perform these tasks,
the RD will

- **form a management structure** under him/her to execute these tasks,
- **appoint a detector advisory group**, the **International Detector Advisory Group (IDAG)**, with the approval of the membership by the ILCSC.

This group makes peer reviews of submitted LOIs and gives advices to the RD.

First step

- The main structure was considered ***last fall***

  in cooperation with WWS co-chairs and talking with GDE.

  The idea was presented to ILCSC February 2008.
- IDAG members were proposed to ILCSC ***December 2007, and were approved in January 2008.***
- ***There was a modification of the schedule and plan by GDE in February, 2008, no EDR but TD phase to 2012.***
- ***Our plan was stretched accordingly to be synchronized.***
- ***The due date of LOI was shifted to end March 2009.***
- ***Formation of IDAG was started after the ILCSC approved this change.***

The frame structure of the management

- ***The idea was agreed by ILCSC February 2008.***

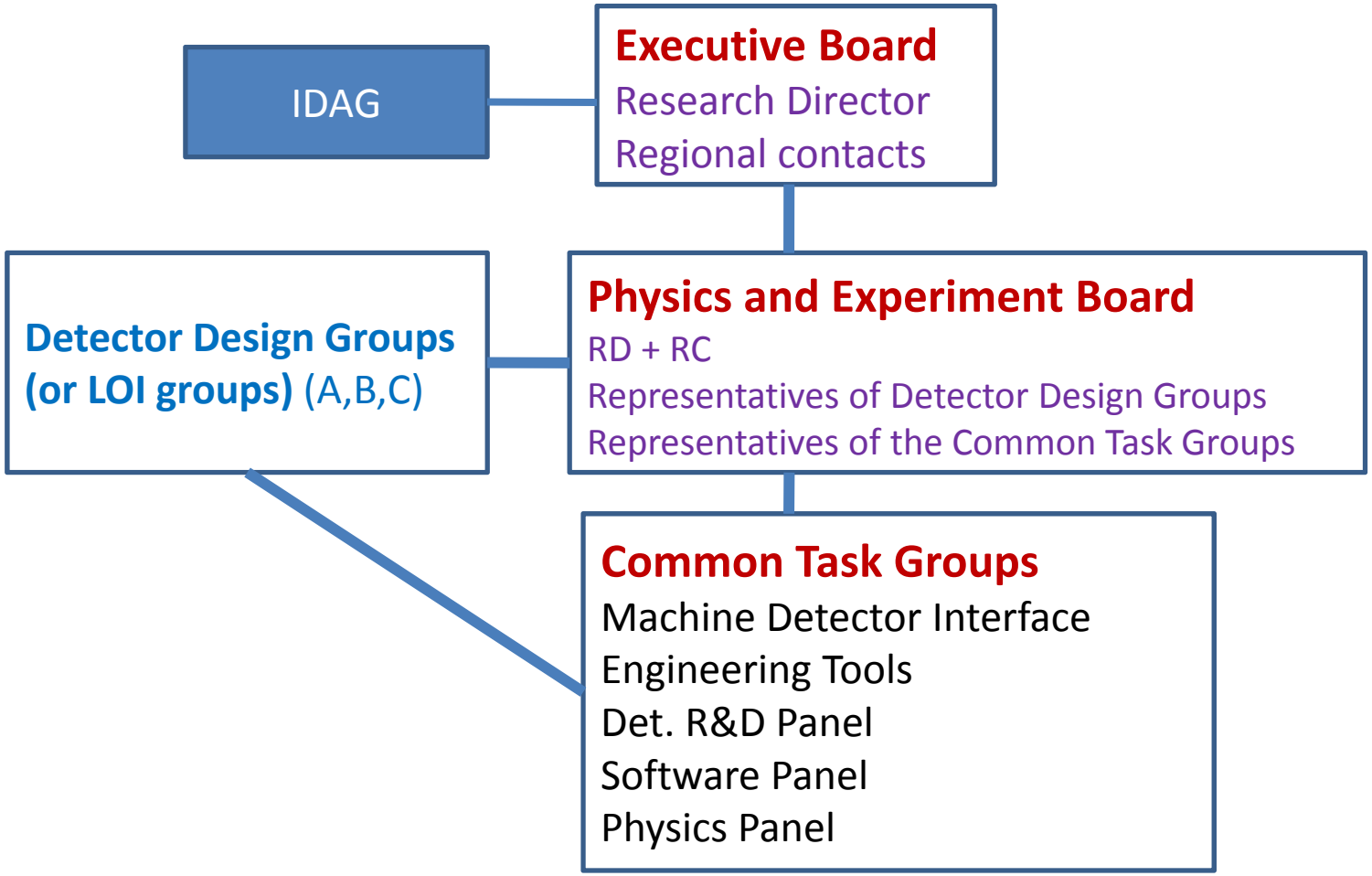

Structure of the management (2)

- **Regional contacts**: one member from each region who works very closely with RD. They make links with ILC physics community of each region.

Temporary solution: **The WWS co-chairs were asked to become regional contacts with the endorsement of relevant organization of each region.**

In some region, this was accepted as 'temporary'.

WWS is a user community in a sense and has a different nature from a management in case of existing accelerator labs. There may be conflicting roles between WWS co-chairs and regional contacts of the management.

This was recognized. Still, We chose the solution and wish to continue the scheme further until things become more solid.

Close communications with the WWS is needed crucially.

RD and Regional contacts form

Executive board or Directorate

meet regularly (once a week) to discuss everything.

The members are invited to GDE's EC meeting about once a month.

LOI groups

- LOI groups are known only after they submit LOIs.
- We identified possible LOI groups by asking for Expression of Interest (*due Date: End March 2008*) with certain conditions.

Enough resources to *prepare an LOI in time,*
to *work on the benchmarks* and
to *participate in common tasks*.

required:

name(s) of representative(s) and **participating institutions**

Double signing was allowed although it was not recommended.

Three groups responded: **ILD, SiD, the 4th concept**

ILD group

- Representatives: Ties Behnke (DESY), Yasuhiro Sugimoto (KEK)
- Participating Institutions: 169 (28 counties)

SiD group

- Representatives: John Jaros (SLAC), Harry Weerts (ANL)
- Participating Institutions: 49 (8 counties)

The 4th concept group

- Representatives: John Hauptman (Iowa State), G.P. Yeh (FNAL)
- Participating Institutions: 17 (10 counties)

Communication channel with the LOI groups:
LOI representatives and the directorate meet regularly, once a month.

Bench Mark reactions

- The bench mark reactions, which need to be studied in showing the detector performance, were specified by the WWS software panel in discussion **with the possible LOI groups**, December 2007.
- There are 7 interesting reactions, like
- **e+e-→ZH, H→e+e-X, μμX (MH=120 GeV, Ecms=250 GeV)**
- **e+e-→ZH, H→cc, Z→νν (MH=120GeV, Ecm=250GeV)**
- **e+e-→tt, t→bW, W→qq' (Mtop=175GeV, Ecm=500 GeV)**
- Etc. e.g. SUSY particle

Here relatively light Higgs is chosen based on the LEP result.

The groups can add more topics, which clearly demonstrate the capability of their detectors.

Common Task Groups

created for the LOI groups **to cooperate cutting across the group boundary** for the tasks of common interest.

1. **Machine Detector Interface**
2. **Engineering Tools**
3. **Detector R&D Panel**
4. **Software Panel**
5. **Physics Panel**

The conveners of the common task groups will join the Physics and Experiment Board together with LOI reps.

They are now being selected.

There can be more if needed as time goes.

Many of these actions were carried by WWS earlier. But WWS terminated them last June in view of the new management structure.

→ Transferred to these common task groups.

→ **Lead to some changes of roles recently**

(WWS had a wider view than ILC in some cases.)

Common task groups (continued 1)

The numbers are participating members from each group.

MDI group (2 + 2 from GDE)

It communicates with the accelerator team on the MDI (BDS) issues, e.g.

Final focus, radiation shield, beam dump,

Push-pull mechanism, infrastructure

This was most urgently needed was formed first.

Engineering Tools (1)

Communicates with the accelerator team to use common tools for engineering.

Detector R&D Panel (3 + contact from R&D collaborations)

cooperates in detector R&D where possible (e.g. seek for test beams)

make overview of the R&D activities, make reviews of status

Various Detector Collaborations will be linked to the ILC detector organization through this R&D Panel while they are independent groups.

Cooperation with these collaboration is crucially important for the LOI groups to advance detector R&D of their concepts

Common task Groups (continued)

Software Panel (2)

Common simulation tools, Common data base, Software compatibility

Data reduction, Eve. Reconstruction, Data storage, data distribution,

The WWS software panel made detailed preparation in arranging the benchmark reactions for LOI. ***When further work becomes necessary, this group will do the job.***

Physics panel (2 + 2 from each region)

Studies of Energy vs physics, additional bench mark reactions

Interaction with other colliders/observations

In view of new results from LHC, this panel will try to investigate possible scenarios of research at ILC.

Work out as many physics cases as possible in order to provide physics materials for the consideration of e.g. initial energy.

They may extend their studies for a longer term future.

Oct, 2008

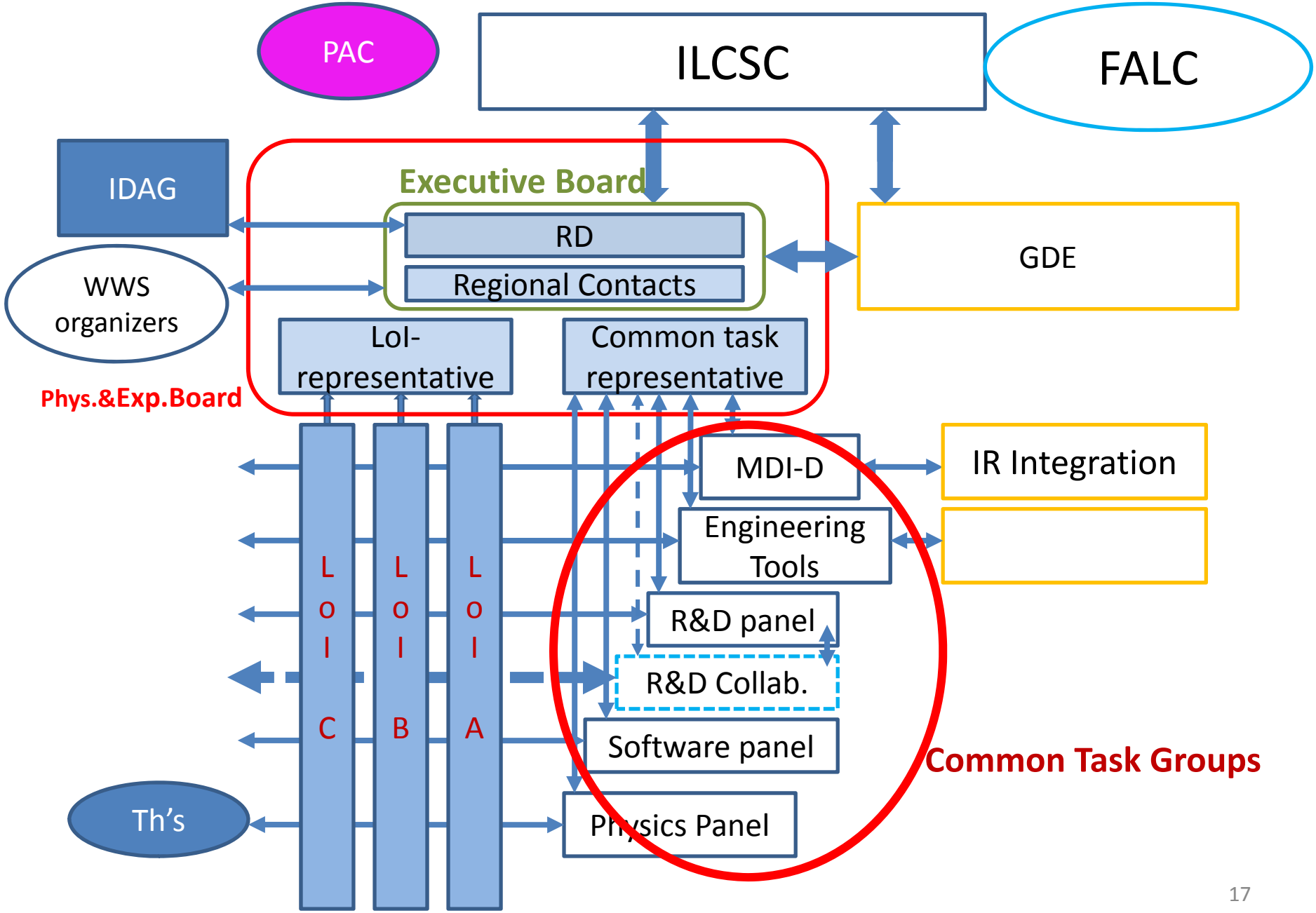
PAC
ILCSC
FALC
IDAG
Executive Board
RD
Regional Contacts
GDE
WWS organizers
LoI-representative
Common task representative
Phys.&Exp.Board
MDI-D
IR Integration
Engineering Tools
R&D panel
R&D Collab.
Software panel
Physics Panel
LOI C
LOI B
LOI A
Th's
Common Task Groups

Communication with the community

- This is very important.
- **Regular meetings** (once a month) with LOI representatives (and the conveners of the common task groups when they are fixed.)
- We are support by GDE to use the Webex system at FNAL.
- **Web page**, linked from the ILC home page, contain various information (Assistance from GDE obtained in preparation)
- Regular article by RD and RC in the **ILC Newlines** (once a month)
  (Here we are assisted by the communicators.)
- Reports and meetings at **WWS or regional workshops**
- For important key information, WWS co-chairs send E-mails to all individual physicists in each region. (Ex. Call for LOI or Call for EOI)
- In each region, Regional Contacts communicate with the relevant regional bodies for ILC activity.

In the monthly meeting with GDE-EC, the opinion of the community is transmitted to GDE.

Plan

- Now 3 groups are working to prepare LOIs.
- They submit LOIs by end March, 2009.
- Details of each group's LOI can be reported at the next PAC.
- IDAG starts the validation process from April , which hopefully comes to a conclusion in Fall.

The LOI groups want to have the result a.s.a.p.

- Validated group will continue to complete their R&Ds needed for their detector system to complete their technical designs.
- *Validation is not the end of the story but the start of more intense design works.*

Detector Concepts - ILD

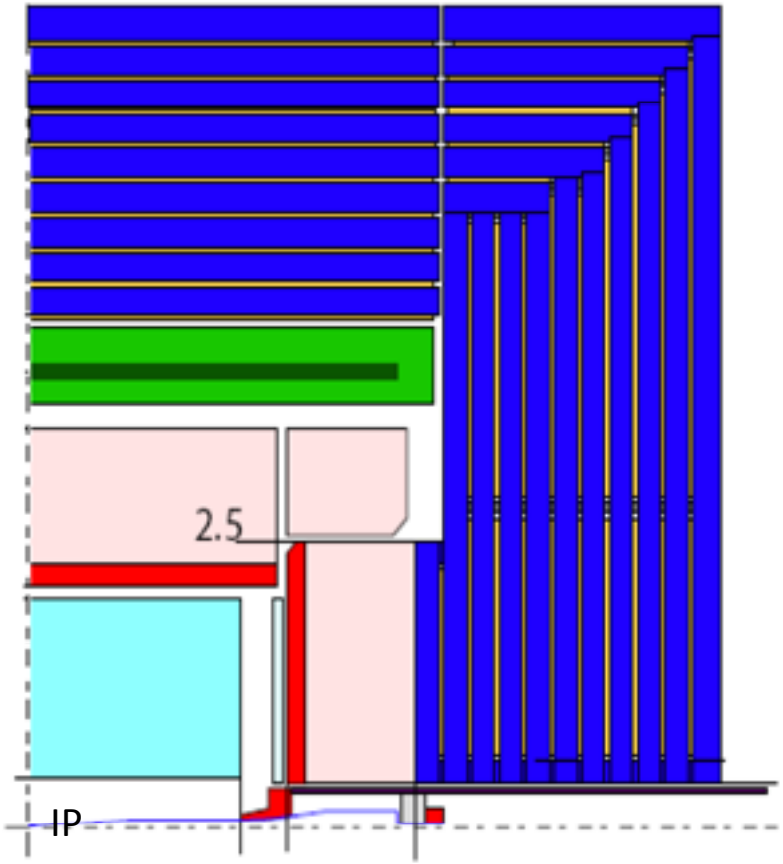

OD ~ 14.4m, L ~ 15m total

- LDC + GLD
- 169 inst's (28 countries)
- VTX + SI + TPC + CAL + SC Mag (3~4T) + Muon
- PFA
- Versatile detector with high precision, high reliability

Detector Concepts - SiD

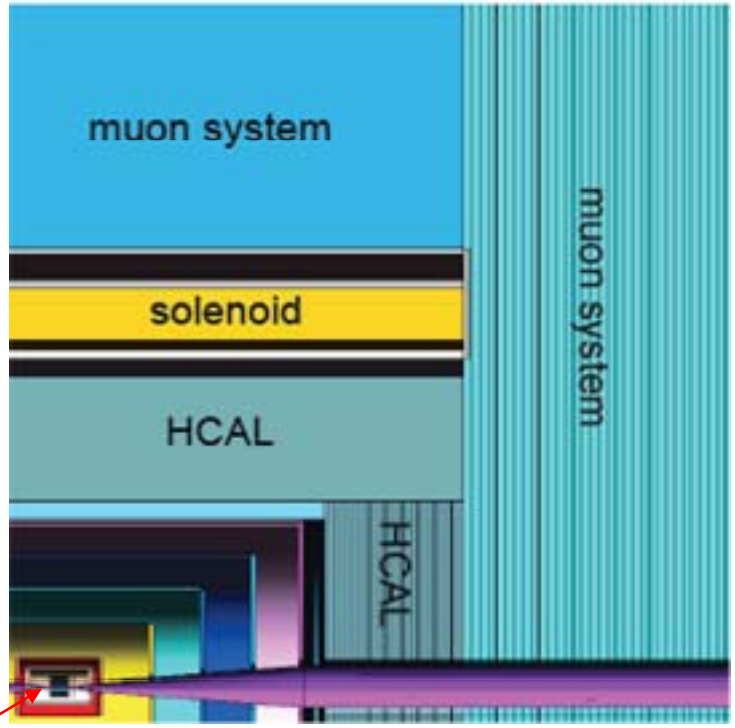

IP

OD ~ 12 m, L ~ 12 m total

- 49 inst's (8 countries)
- VTX + Si-based tracker + Si/W ECAL + HCAL + SC Mag (~5T) + Muon
- Active use of Si technology
- PFA
- Versatile, compact detector with high precision, high reliability

Detector Concepts – 4th

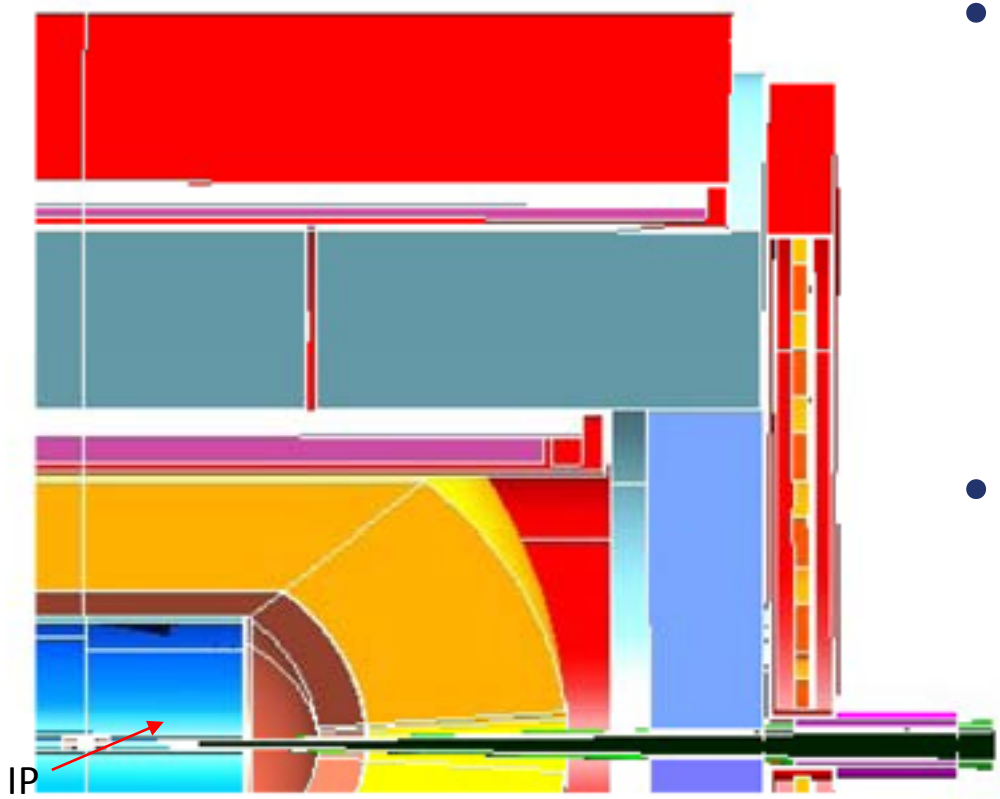

OD ~ 12 .8 m, L ~ 15.4 m total

- 17 inst's (10 countries)
- VTX + Cluster-counting tracker (low-mass) + CAL with dual-readout + Iron-free dual-solenoid (~1.6T/3T) + CluCou muon tracker
- General-purpose detector with a very innovative approach to calorimetry, tracking and field configuration.

R&Ds & Studies to be continued during the detector design phase I, --2010.

GDE-TDP- I

- Focus R&D on prioritized area and critical elements
- Complete validated detector specification and initiate technical design work
- Update of physics performance (Benchmark reactions)

Details of various causes of performance deterioration.

•Prioritized R&D for risk reduction and for final focus

• MDI

Detector Design Phase II -- till 2012

GDE-TDP- II

React to LHC results

Final confirmation of physics performance

Complete necessary R&D

Complete technical design for ILC proposal

- Complete MDI technical design
- Complete reliable cost role up

Prepare for financial plan

- Complete technical design and R&D needed for project proposal
- Documented design
- Complete reliable cost role up
- Project plan developed

Issues and problems

- LOI procedure is not understood correctly.
  (“too early to fix”)
  This LOI call is a very NEW and CREATIVE attempt.
- **It is a necessary step to complete the accelerator design with detectors and to advance detector R&Ds,**
  and was agreed by FALC and issued by ILCSC.
- We have to emphasize

1. Its aim is NOT to fix detector technologies now.
2. The major activity of the detector remains to be R&Ds.

The LOI groups can identify clear targets for R&Ds,
make plans and define milestones of R&Ds.

In order to conduct the LOI process, certain budgets are required. Each participating group works hard to seek resources for its R&D activity. We try to help but do not provide them ourselves.

At present there is financial unbalance among the LOI groups.

In order to improve, presentation of clear planning will be helpful.

Issues and problems (continued)

- **Communications**

1. The detector community is large and wide.
2. While certain channels are used, through LOI groups and WWS, it often takes time to get feedback or these channels do not cover the community entirely. We try to communicate as widely as possible.

- In the communication with GDE, this causes a delay.
- ***We believe it important that a consensus is reached even if it takes time.***

Conclusions

- LOI process is progressing following the given mandate.

1. The managing structure was formed.
2. The LOI groups were identified.
3. Five common task groups were formed.

   MDI is active since April and the other 4 will be activated soon.

- IDAG was formed and meets during the LCWSs.
- We expect LOI groups complete their preparation in time.
- The effect of financial difficulty is worried. Clear planning through the LOI process help hopefully.

Budget

- RD budget was requested by GDE to FALC.
- Total 150 k$ for FY2008
- 3 quarters were allocated for the IDAG related cost (for the travel of the members particularly those members from universities)
- 1 quarter was allocated for the communication cost for the detector related activities

Conveners and sub-conveners of the Common Task Groups

- **Machine Detector Interface:**
  Karsten Buesser (Phil Burrows)
- **Engineering Tools**
  Catharine Clerc
- **Detector R&D Panel**
  Marcel Demarteau (Franco Grancagnolo)
- **Software Panel**
  Akiya Miyamoto (Norman Graf)
- **Physics Panel**
  Michael Peskin (Georg Weiglein, Keisuke Fujii)

These conveners will participate the Physics and Experiment board.

Reduced benchmark reactions

- Reduced number of Benchmark reactions prepared by the WWS Software Panel (T. Behnke, N. Graf, A. Miyamoto)

(They were discussed in WWS workshops and will be discussed further by IDAG.)

Each channel provides a measure to examine the detector performance.

1. $e^+e^- \rightarrow Z^oH^o \rightarrow l^+l^-X$ (Missing mass) , M_{H^o}=120GeV , Ecm=250 GeV
   Lepton ID and their energy measurement.

2. $e^+e^- \rightarrow Z^oH^o$, H^o(120GeV) $\rightarrow c\bar{c}$, $Z^o \rightarrow \nu\nu$, Ecm=250 GeV
   C-tagging in jets, uds anti-tagging. $H^o \rightarrow gg$ provides BG modes.

3. $e^+e^- \rightarrow Z^oH^o$, H^o(120GeV) $\rightarrow c\bar{c}$, $Z^o \rightarrow q\bar{q}$, Ecm=250 GeV
   In addition to c-tagging, test the confusion resolution.

Reduced benchmarks (continued)

4. $e^+e^- \rightarrow \tau^+\tau^-$
   Tracking of very close-by tracks. Tau reconstruction,
   aspect of particle flow.

5. $e^+e^- \rightarrow tt$, $t \rightarrow bW$, $W \rightarrow qq$ (Mtop=175 GeV, Ecm=500 GeV)
   Multi jet final state (up to 6 jets), dense jet environment,
   b-jet tagging inside a jet, lepton tagging in a hadron jet an b-ID.

6. $e^+e^- \rightarrow \chi^+\chi^-, \chi^o \chi^o$
   Multi-jet final state with missing Pt

Some extra reactions which are very interesting but may not suited for detector optimization.

1. $e^+e^- \rightarrow ZHH$
   Very challenging with many jets for particle flow performance.
2. Secondary vertex reconstruction and quark charge measurement