ILD Status Report

Graham Wilson, Univ. of Kansas,
for the ILD Concept

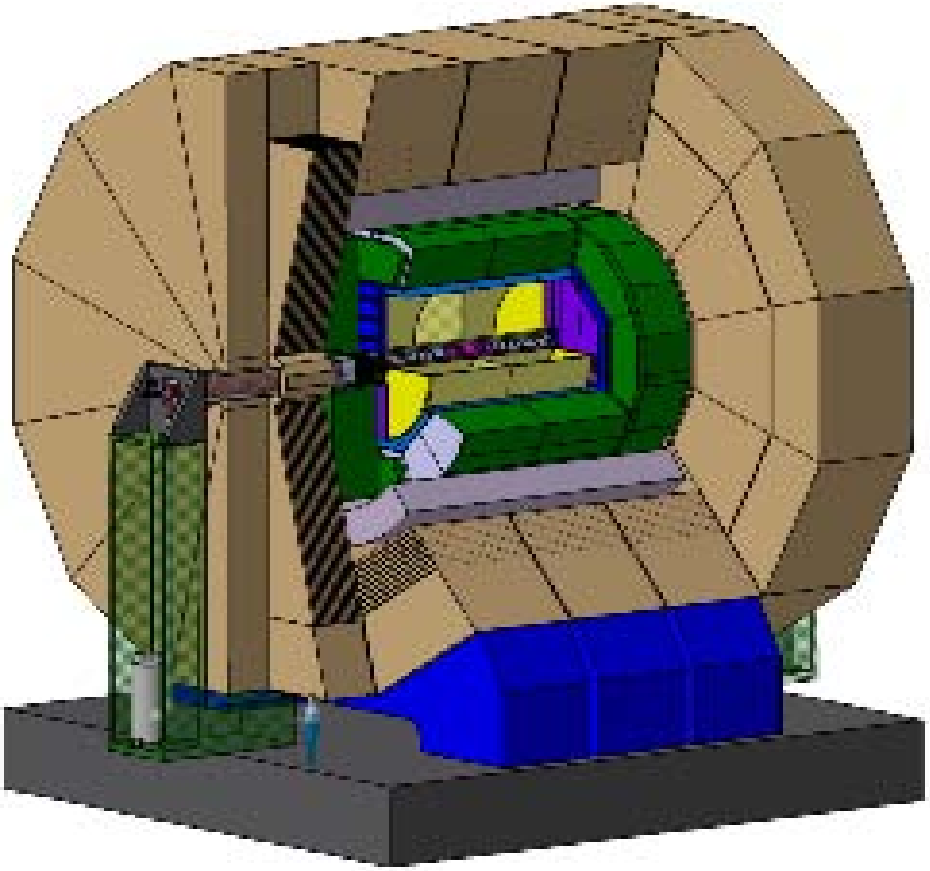

Letter of intent (2009)

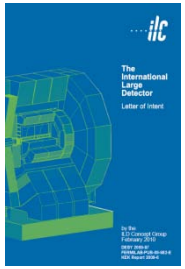

Evaluation
Readiness
Flexibility

Detailed Baseline Document (DBD) 2012

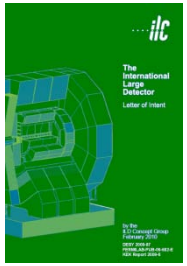

Solid and reliable design

ILD Detector

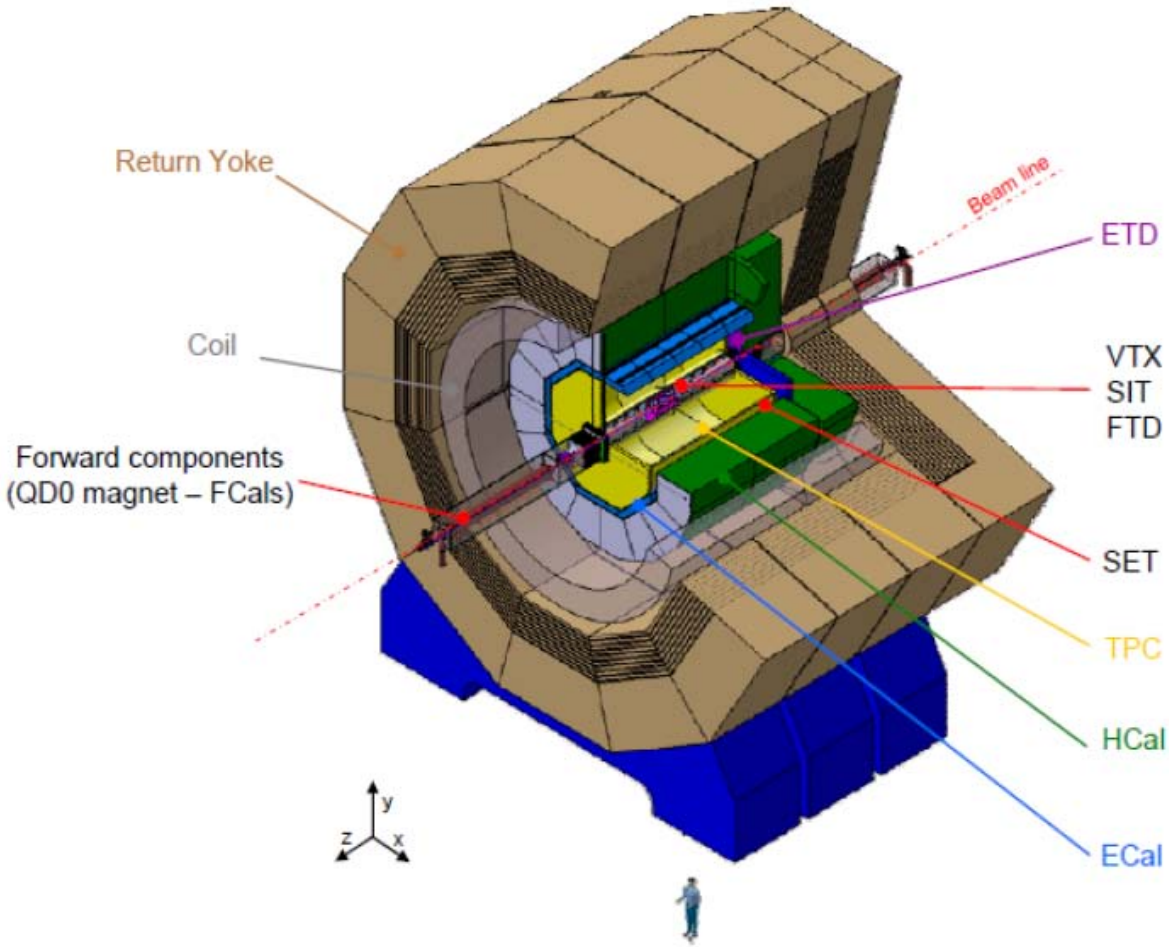

General-purpose detector designed for particle-flow reconstruction of hadronic jets

Precision tracking centered on TPC

B=3.5 T solenoid

High granularity imaging calorimetry at large radius.

Emphasis on hermeticity

Robust design with margin

ILD Detector Optimization (LoI)

Example:

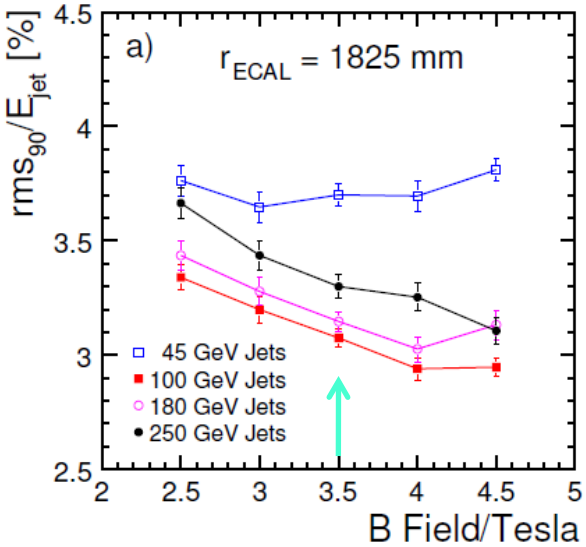

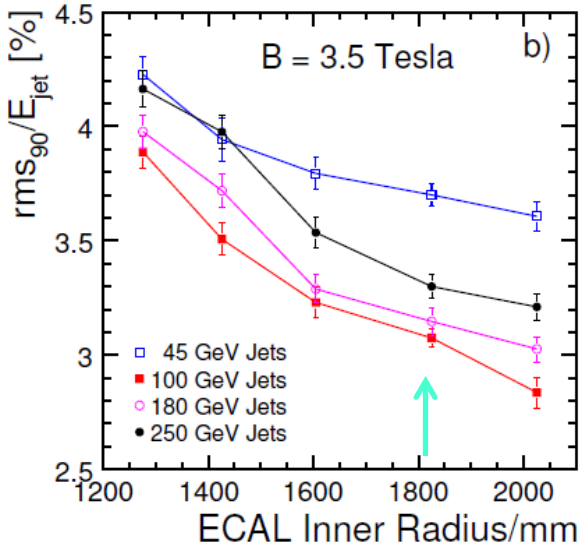

νν**WW** / νν**ZZ**
separation at 1 TeV

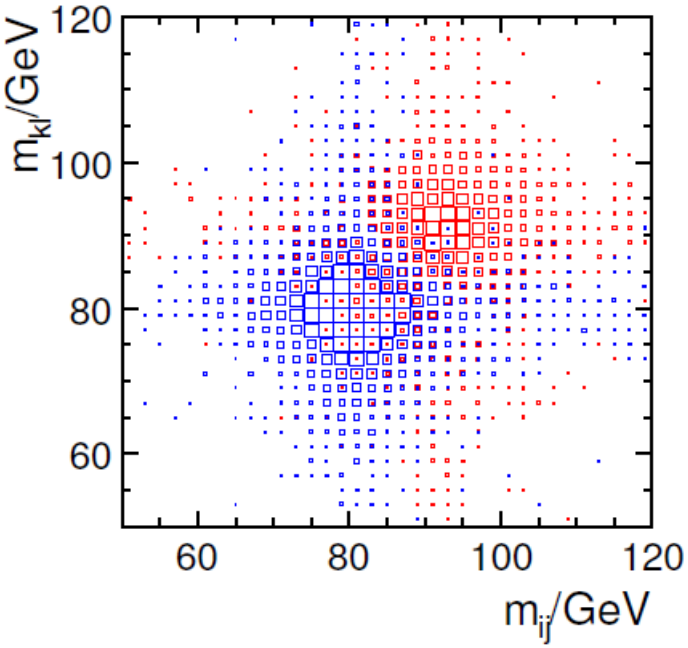

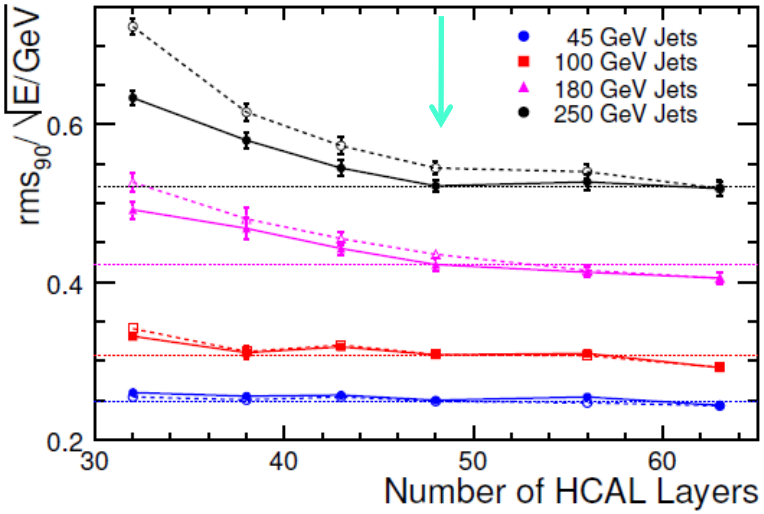

Based on LoI detector, current simulation and reconstruction algorithms, we have a detector design that should be able to do ILC physics

Detector performance can be further improved.
We need to ensure that more realistic modeling and background does not degrade performance much.

ILD Goals Through 2012

- Define a detector with sub-detector options which are considered “ready” by the R&D groups and ILD.
- Include promising alternatives which are less advanced.
- Improve based on real engineering the integration of the detector and its overall realism
- Improve the integration of the detector with the machine
- Develop a realistic simulation model of the overall detector including options.
- Include as far as possible effects of backgrounds in the simulations.
- Develop a better understanding of the costing of these detectors

My take on our goals

- Develop the ILD concept, its sub-detectors, simulation and event reconstruction, so that we can be in a position, when necessary, to take well informed scientific decisions on the relative merits of various design options – both global detector design issues, and sub-detector options, so as to do the best physics.
- At the moment we are focusing on feasibility, but we are also developing the tools to be able to eventually assess the performance (and cost) trade-offs between potential solutions. We hope this will lead to a welcoming and inclusive eventual collaboration.
- There is a trade-off between working on short-term goals associated with the latest document and working on essential longer term issues.

ILD events since Valencia

- ILD integration meeting in Paris, June 2010
- ILD software and integration meeting in DESY, July 2010
- (IWLC 2010 Geneva: ILC + CLIC Joint Workshop : close to 500 participants)

IDAG discussed with ILD at the IWLC meeting.

This presentation builds on much of the material presented there.

ILD organization

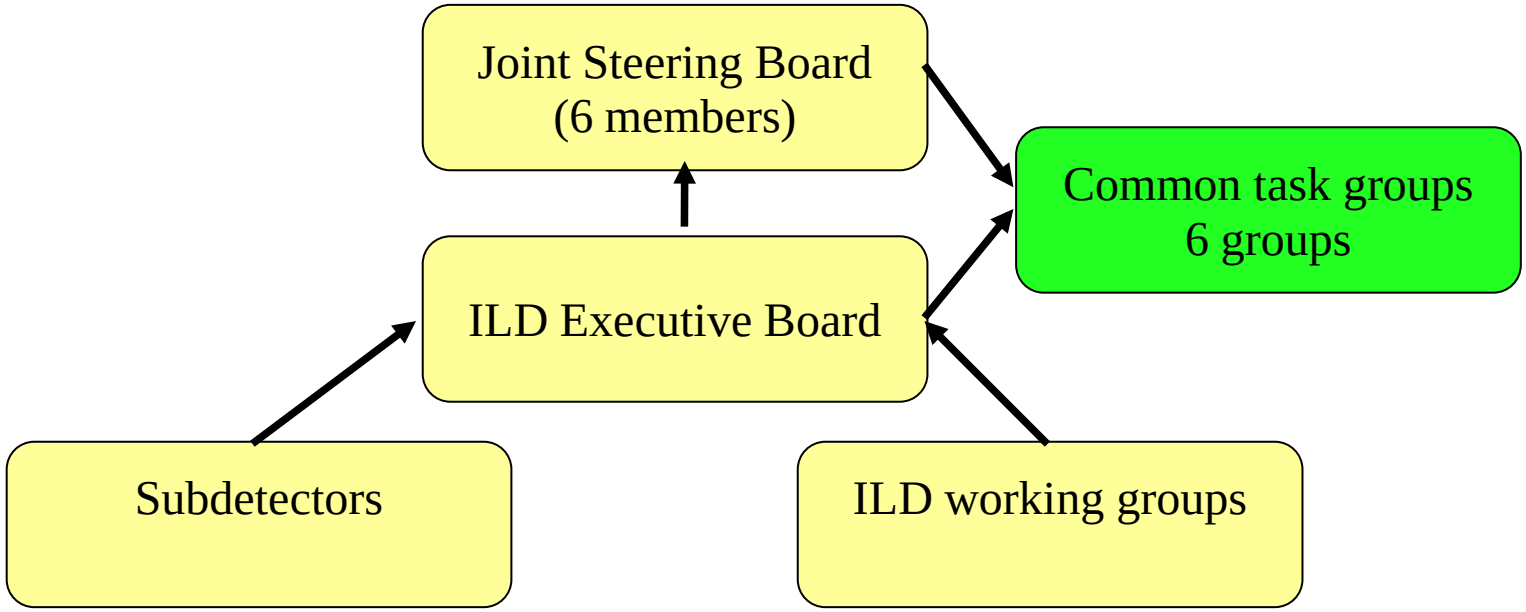

ILD cooperates closely with the detector R&D collaborations for detector development work.

CALICE : calorimetry
LC-TPC : TPC
SiLC : Si tracking
FCAL : forward calorimetry

- optimization
- software
- backgrounds
- integration
- alignment and calibration

Asian Landscape

- Current support assured until spring 2011
- Application for continued support is being developed
- Asian group plays central role in ILD
  - Strong partner in CALICE
  - Strong participation in LC-TPC
  - Leading Fine pixel vertex detectors
  - Integration activities
  - Central software activities

European Landscape

- EUDET is finishing at the end of 2012:
  - Has supplied major infrastructure for nearly every part of the ILC detectors
- AIDA project has received approval by EU:
  - Project has LC and LHC components
  - Significantly less money available to each project
  - Still important for continuing broad based support in Europe
  - Project will start February 2011
  - Out of 8 Mio EUR total about 3 Mio EUR for LC work
  - ILD in Europe will profit from this.
- European groups are still involved in many R&D collaborations
  - After the end of the UK contribution: strongest countries are France and Germany

American Landscape

- Situation in North America for ILD remains difficult
  - No explicit US national lab support for ILD
  - Significant ILD contributions: Cornell (TPC), Kansas (detector performance), within CALICE synergy for calorimeter projects
  - Within SiLC synergies for Silicon tracking: Santa Cruz
  - Canada: TPC, CALICE
- Move to support generic R&D rather than concept specific tasks for what is perceived as a virtual project (ILC)
  - Latest system in U.S. of concept-specific funding of university groups will likely change, making outlook beyond 2012 uncertain
  - Labs see opportunity to leverage current ILC detector studies (SiD) into a combined ILC/CLIC/muon collider? study (may dilute ILC specific effort?)
  - Scarce resources may also compete with longer term LHC detector upgrades

General Manpower

Manpower is clearly critical on all aspects of ILD

It is not clear whether we will be able to even maintain the current level of manpower until 2012

Areas of particular concern:

Silicon vertex:	withdrawal of UK removed many of the key players in the field
SiLC:	broad R&D effort, ILD specific effort is small
FCAL:	effort is drastically reduced, focus shifted to CLIC

ILD baselining

We intend to select baseline technologies based on their readiness in 2012

We will need some review process to develop a consensus on

which technologies meet the requirements and which do not

2-step process:

1) prepare the material within the R&D collaborations,
propose technologies to ILD

2) Within ILD decide which technology will be included in the baseline

Anticipate this for the first half of 2012

Proposed Criteria

1) Sub-detector Performance:

Primarily based on parameters given in LOI, update where needed

2) Demonstrate the performance

- in simulation
- in adequate experiments (mainly test-beam)

3) Demonstrate integration

- provide sufficient detail to be able to integrate into the ILD detector
- develop an engineering concept (level to be defined with the sub-detector people)

ILD detector baseline

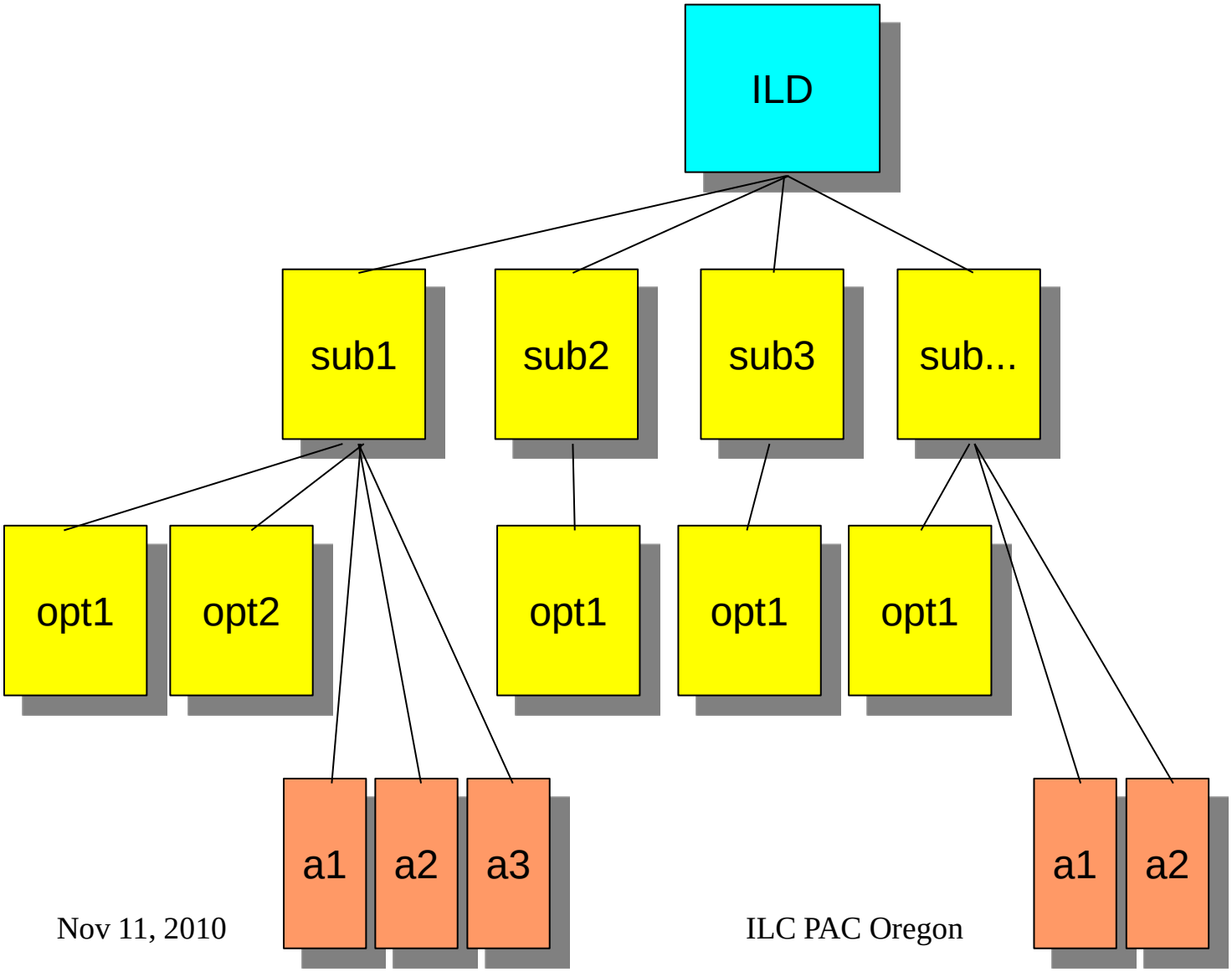

Sub-detector Systems

Options within the baseline

Alternatives

Examples

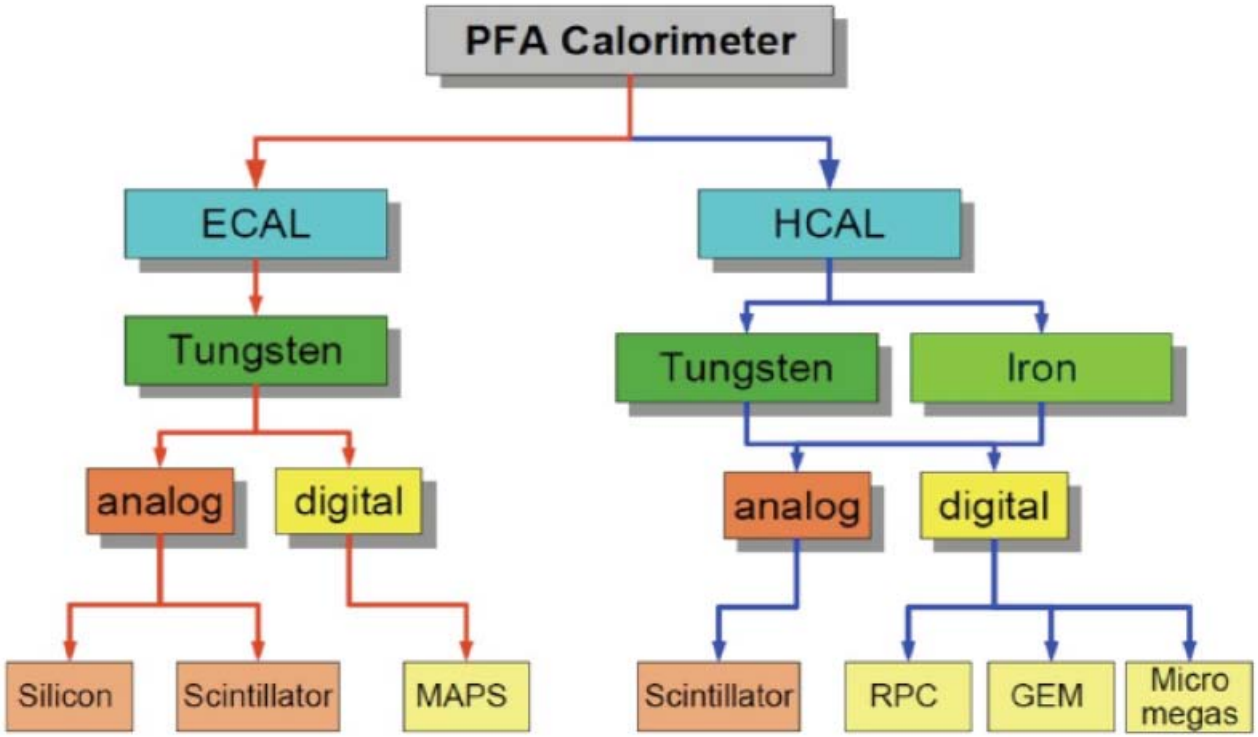

We are not in the business of having a shoot-out.

The goal at this stage is to make sure that we have at least one feasible / ready option for each detector component.

Probably the VTX detector is the most “un-ready”. Not so close to the critical path for construction for the TPC-centered ILD, but important to understand in context of detector B-field.

TPC Readout

MicroMEGAS

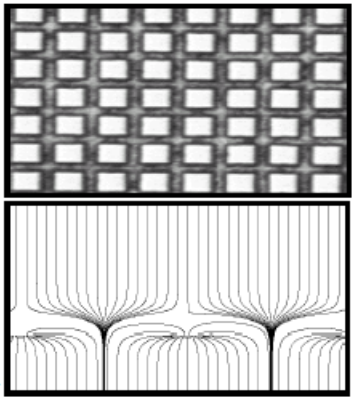

GEM

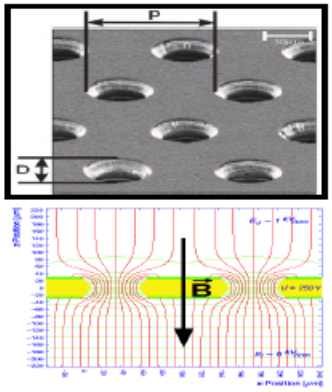

Ingrid TimePix

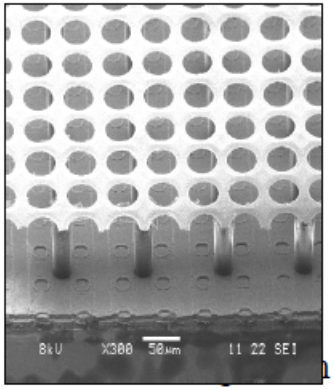

ILD: simulation baseline

One baseline option per sub-detector

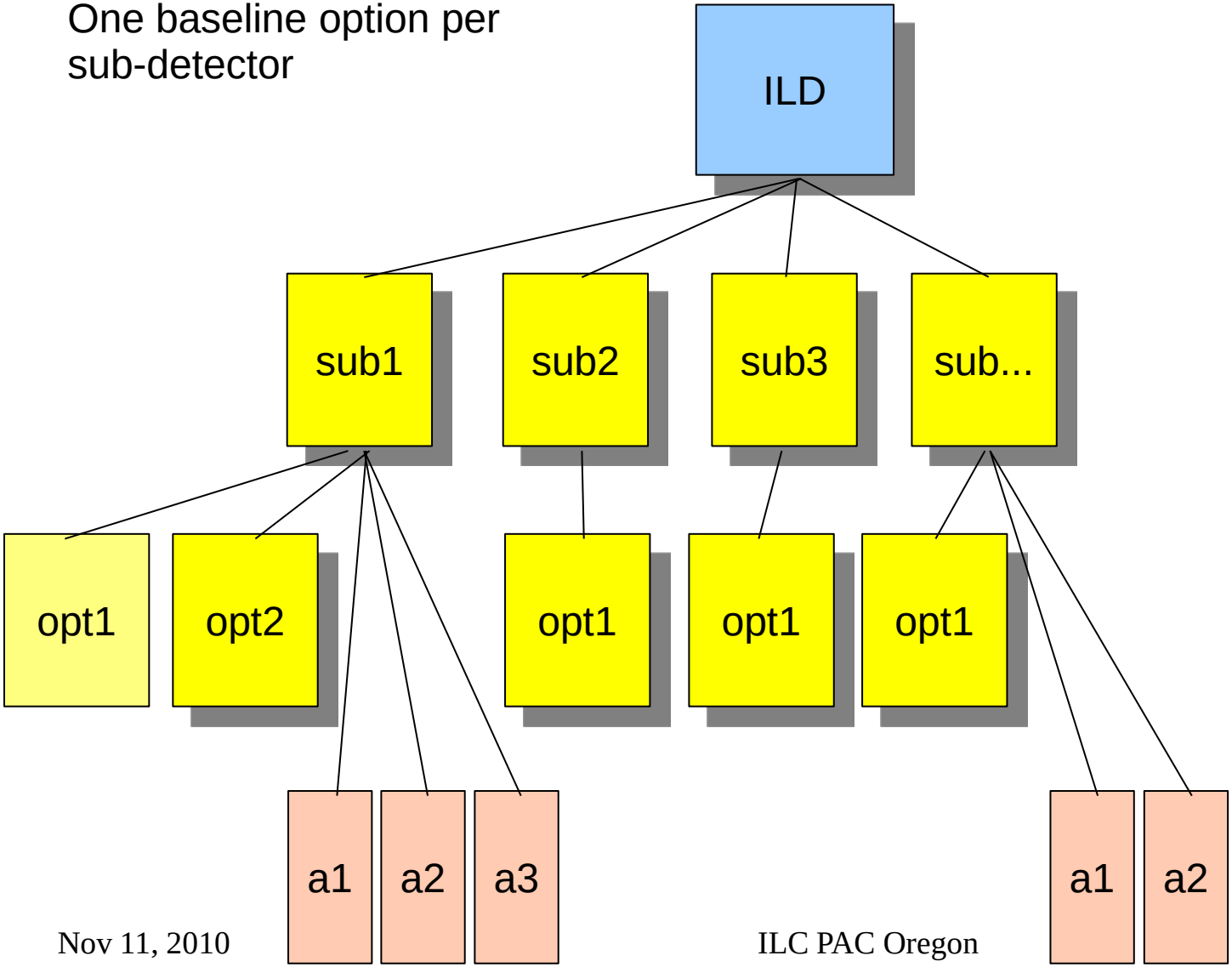

To be used for a large scale production of physics events!

Sub-detector Systems

Options within the baseline

Alternatives

ILD baselines

Different versions of the same model are needed:

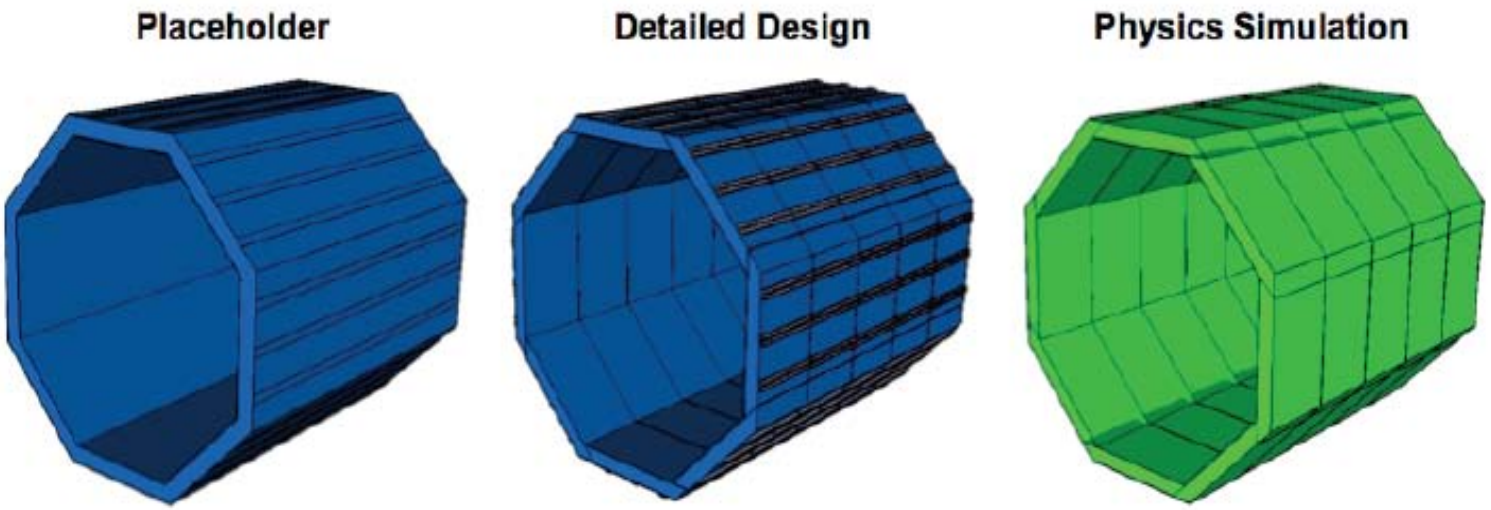

For each system more than one technology might be the “baseline”

Need adequate system to manage and control these options

ILD “project management”

Central instance of EDMS system for ILD has been setup at DESY

Central ILD model is managed there

Areas for subgroups to manage their material have been defined

Some support within AIDA is available to run this effort

(need to find person to do this)

Goal: at the DBD have a complete documentation of ILD available within EDMS

ILC EDMS for ILD

Handling and sharing ILD information: parameter definition, CAD models, simulation models, technical documents.

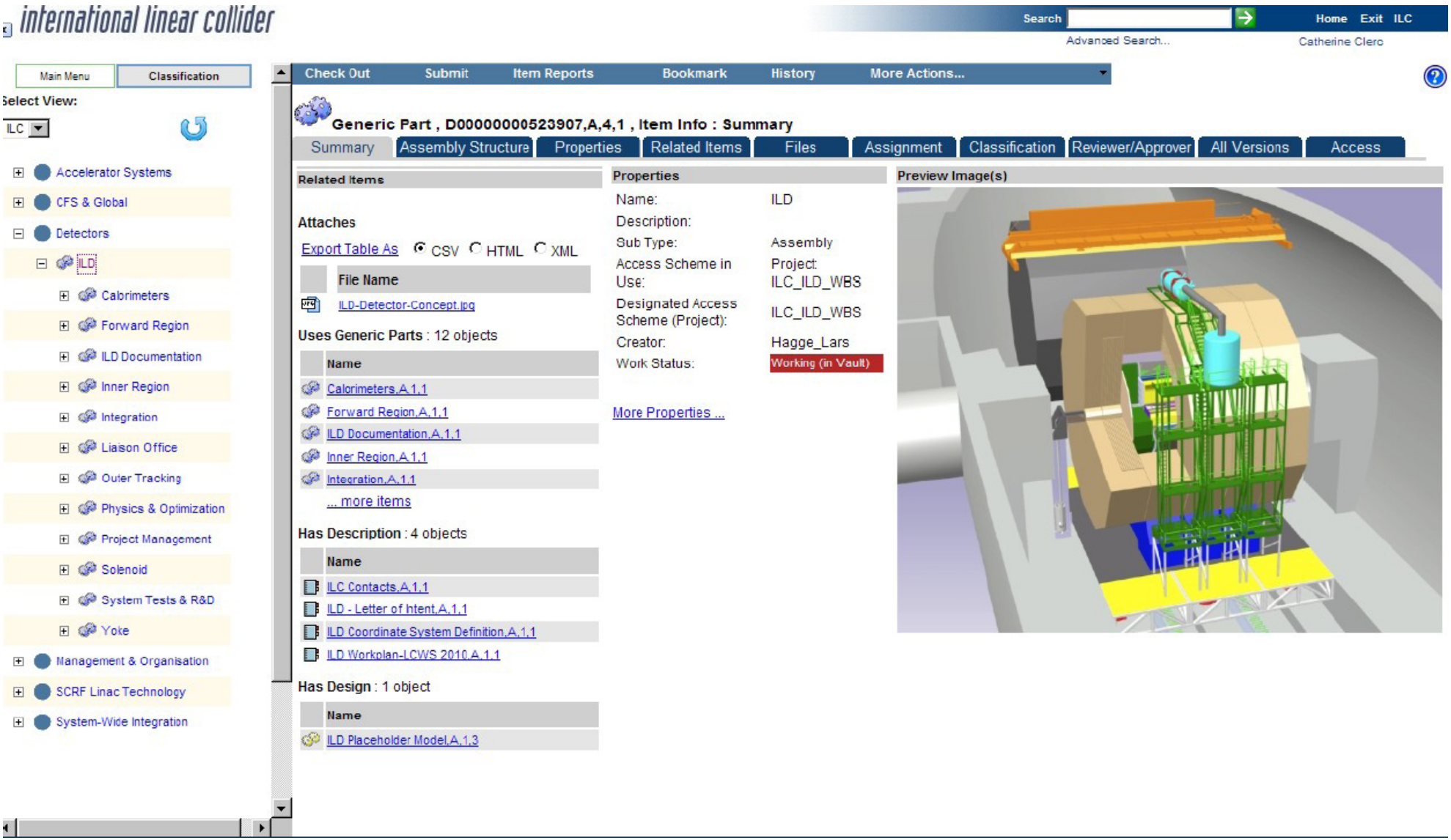

ILD Milestones

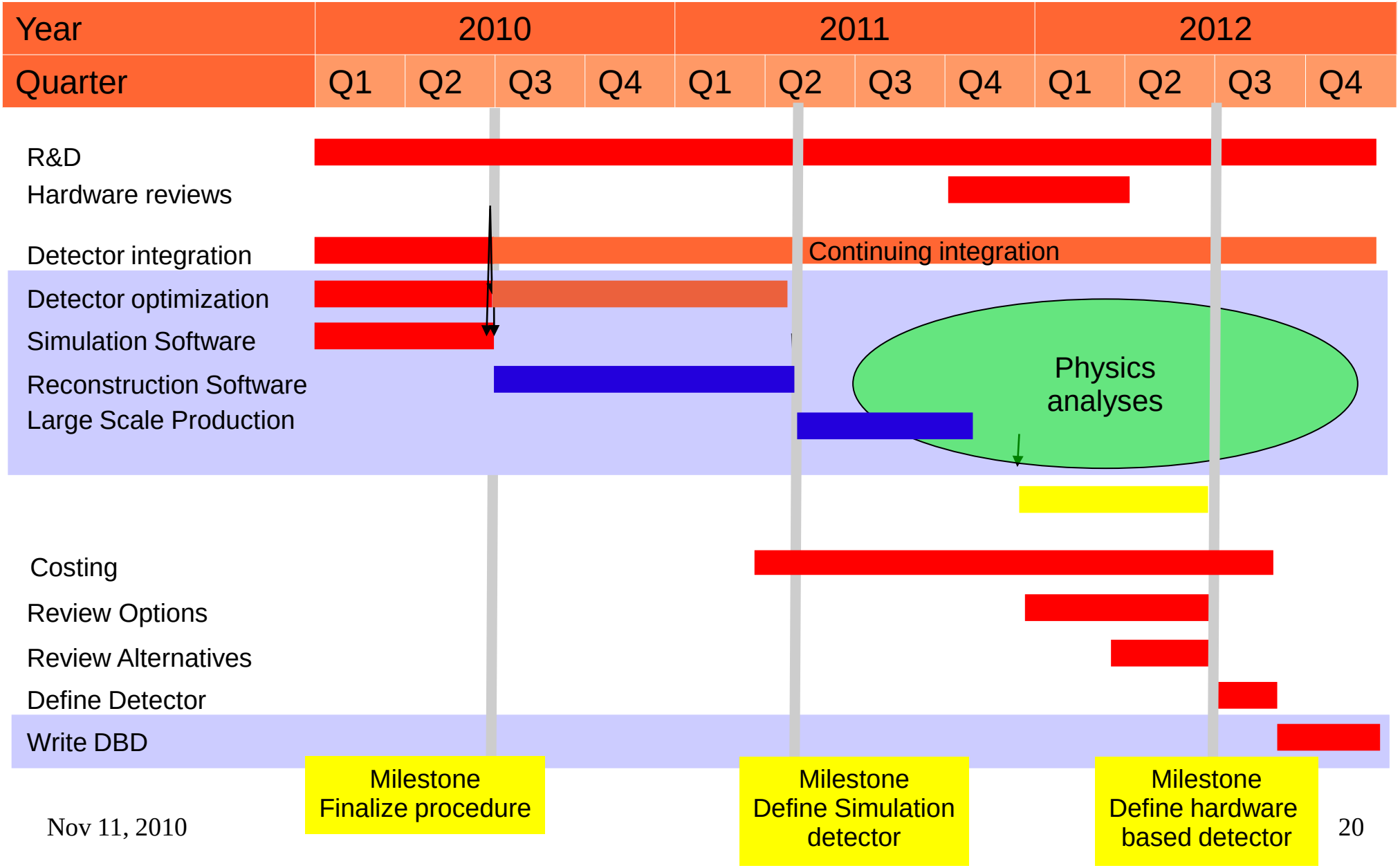

Physics updates: current planning

The DBD will not be the document to make the complete physics case for the ILC!

Main focus of the DBD:

- Fill existing holes from the LOI
- Add 350 GeV analysis ←
- Add 1 TeV analyses

Nearly done
as part of SB2009 discussion

Software developments are on track
Need to decide the scope of a possible mass production
This decision should happen in spring 2011 (ILD meeting at KEK)

Push Pull

Push pull is critical

- Platform / no platform

- close cooperation with CERN and CLIC

- close cooperation with SiD: try to arrive at one common solution

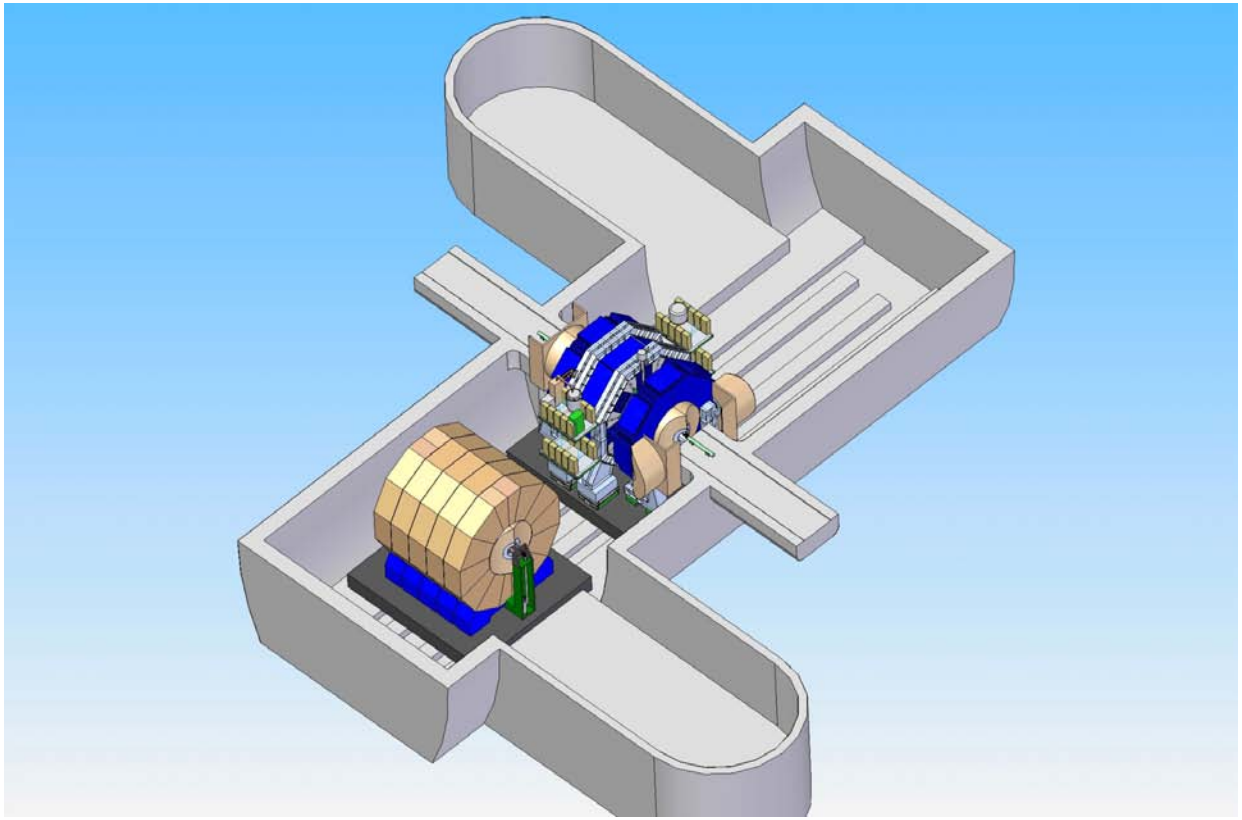

Goal: decision by March 2011 between ILD and SiD

See K. Buesser's talk for more details

ILD simulation

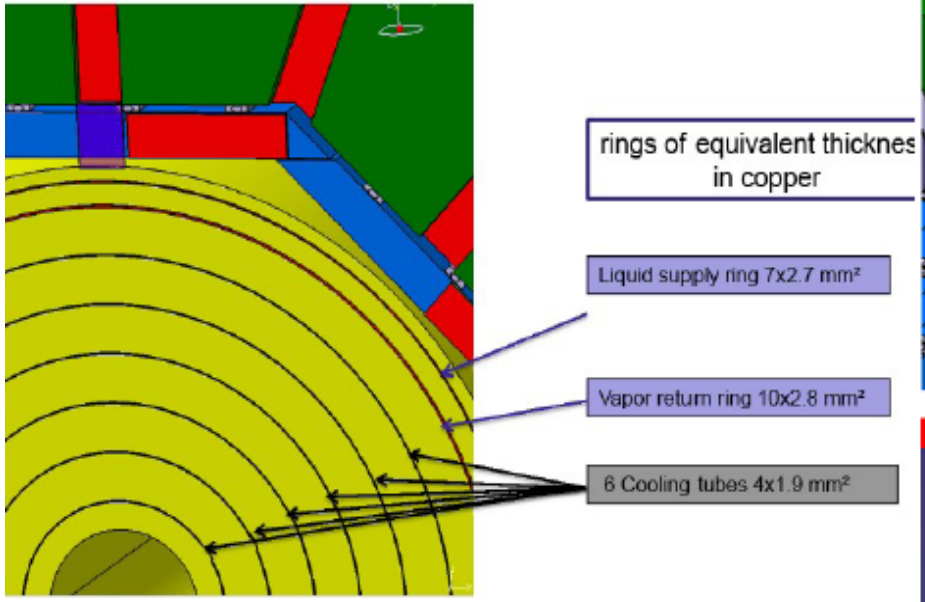

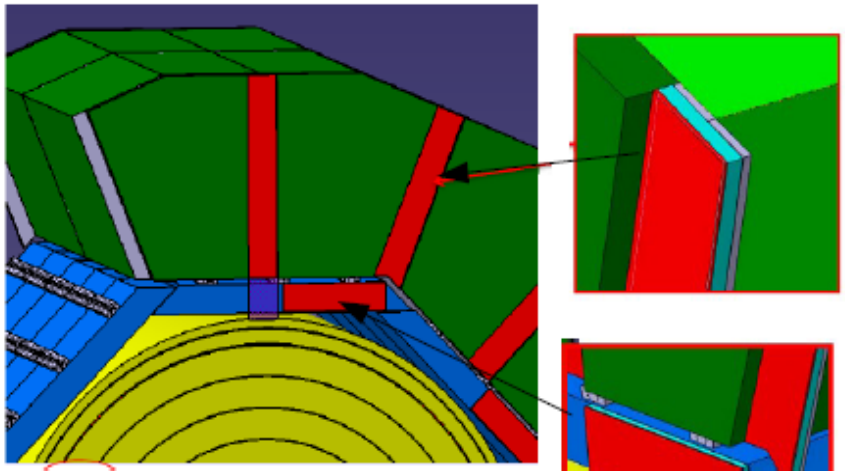

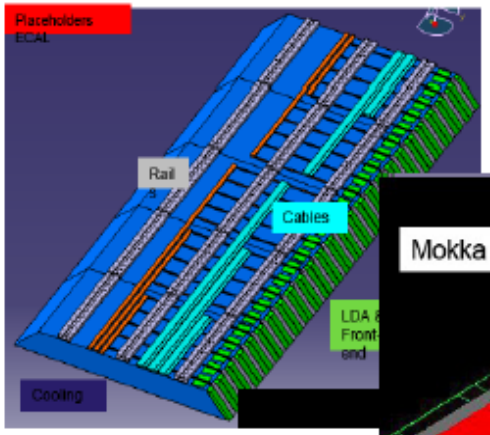

Engineering model

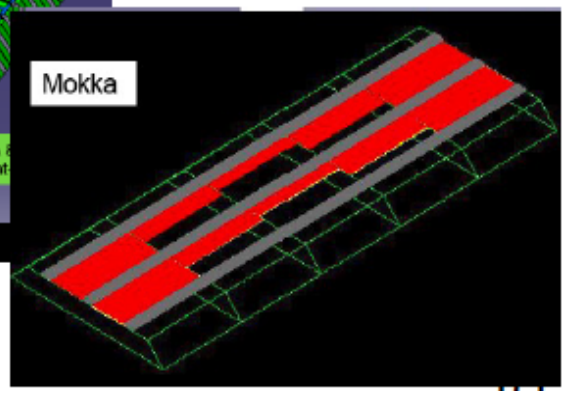

MOKKA model

Significant progress in including detailed information where needed

Simplified models are being developed to include material, dead zones, support structures

Software

Significant effort to improve and maintain software

Synergies between concept work and R&D groups

Synergies with CLIC

Red = new
Blue =updated
Black=stable

CED	v01-01
CEDViewer	v01-01-pre
CLHEP	2.0.4.2
CMakeModules	v01-10-pre
CondDBMySQL	ILC-0-9-1-pre
Druid	1.8
Eutelescope	v00-04-04
LCFIVertex	v00-04-pre
LCFI_MokkaBasedNets	v00-01
Marlin	v00-13-pre
MarlinPandora	v00-02
MarlinReco	'v00-19'
MarlinTPC	v00-06
MarlinUtil	v01-01-pre
Mokka	'mokka-07-06'
MokkaDBConfig	v02-01

Overlay	v00-07-04
PandoraPFA	v03-02-02
PandoraPFANew	v00-03
QT	4.2.2
RAIDA	v01-05-pre
SiliconDigi	v00-04-02
StandardConfig	v02-01
cernlib	2006
dcap	1.9.5-5
gear	v00-15-pre
gsl	1.8
lccd	v01-01-pre
lcio	v01-51-01
mysql	5.0.45
root	5.26.00b
KalTest	**v01-00**
KalDet	**v01-00**

Tracking Software

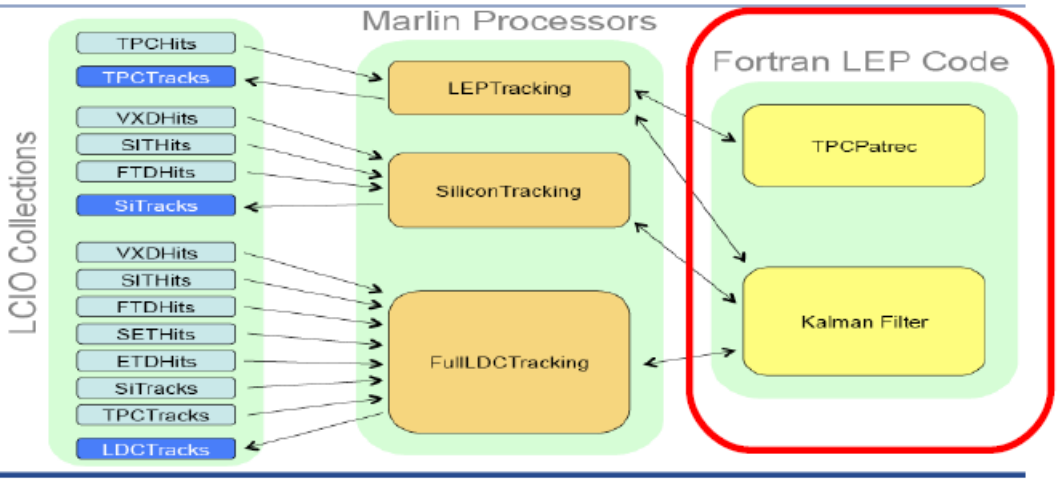

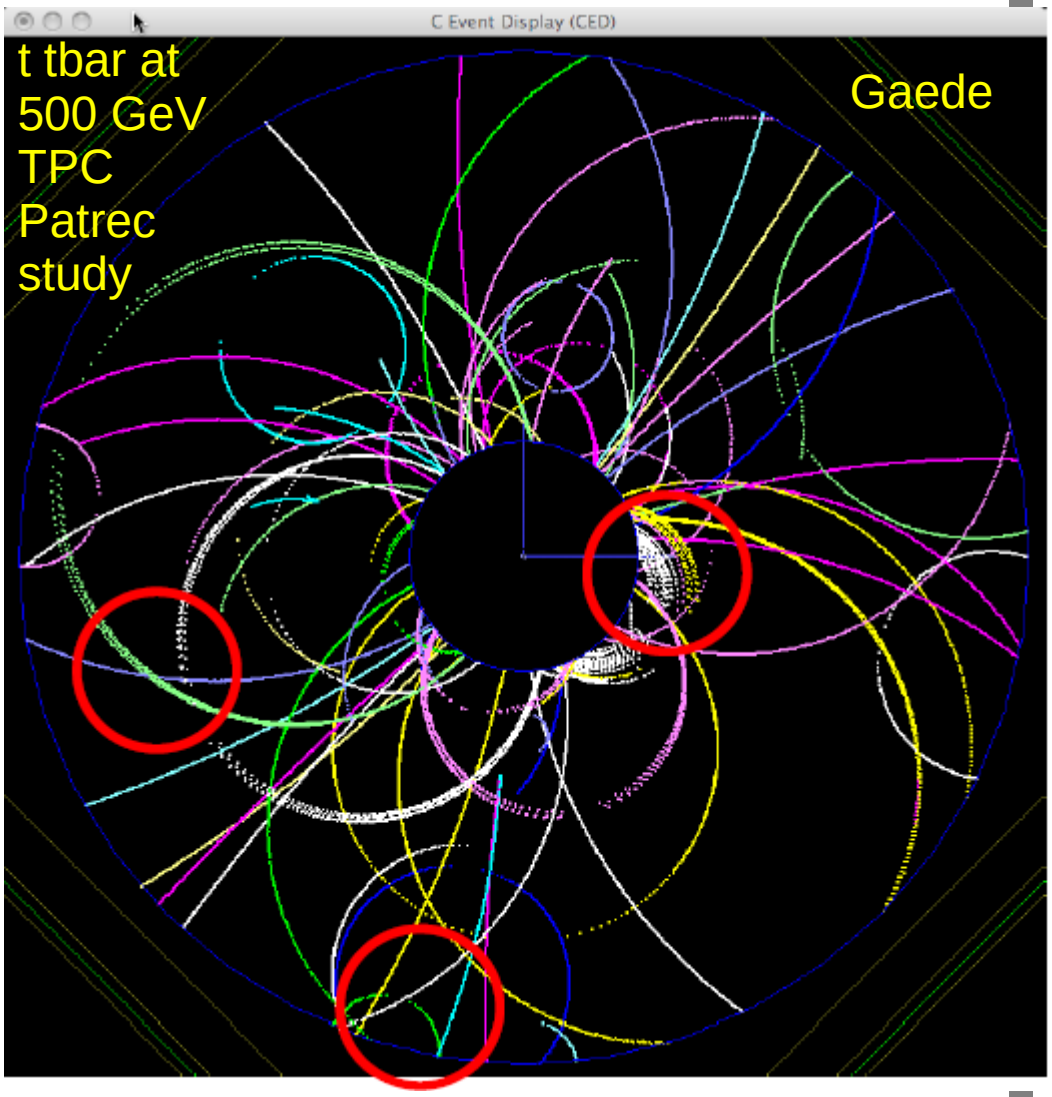

Very good progress being made on replacement track reconstruction software

Legacy LEP code (f77) for TPC Patrec and Kalman filter was not well suited to realistic studies especially with non-uniform B, backgrounds and high multiplicities

Vertex detector

World-wide, several technologies are being developed for highly pixellated, thin vertex detectors

ILD specific effort recently has focused on CMOS and FPCCDs.

Different technologies have different readout schemes eg. CMOS

layer	Readout (μs) - (#BXs superimposed)	
	SL	DL
0	25 (68)	25 (68)
1	50 (136)	25 (68)
2	100 (272)	100 (272)
3	100 (272)	100 (272)
4	100 (272)	100 (272)
5		100 (272)

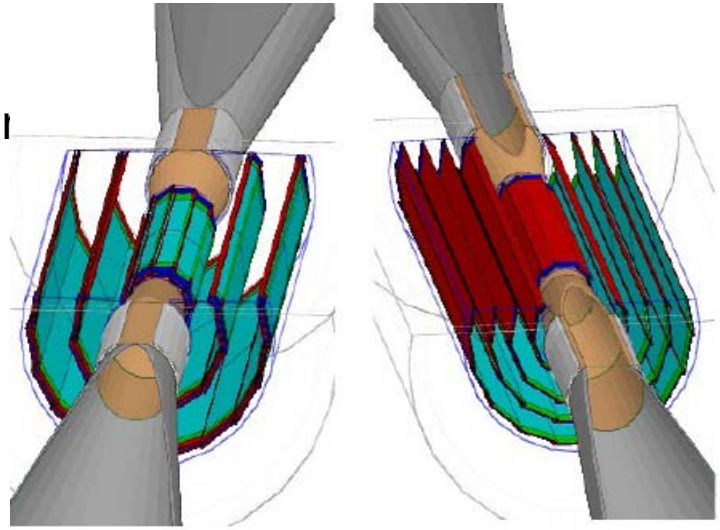

ILD is investigating two candidate geometries (3 double layers (DL) and 5 single layers (SL)).

Ongoing studies including beam background simulation progressing well.

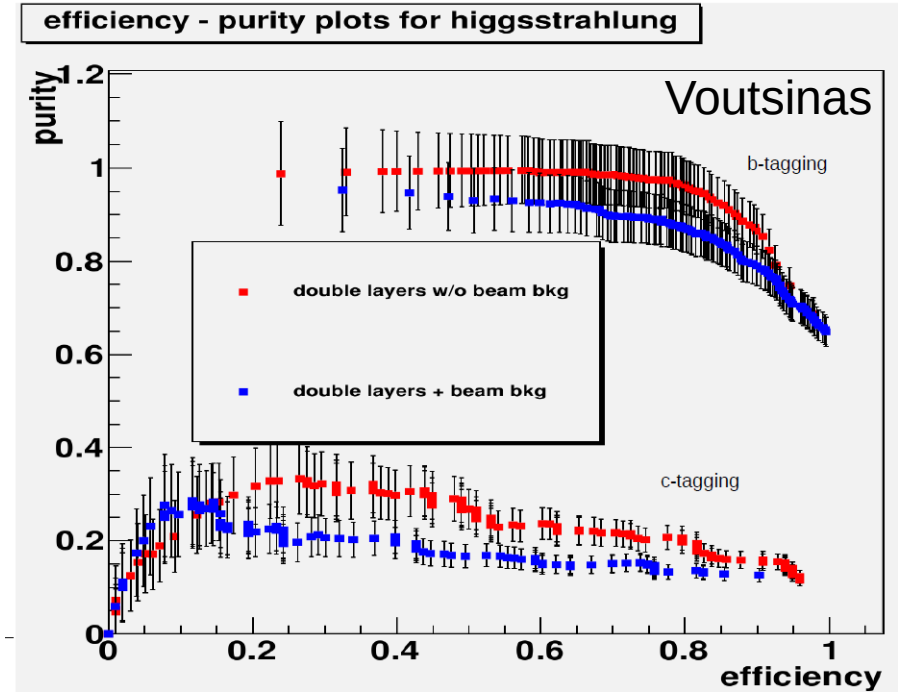

LC-TPC collaboration

TPC

Large prototype tests in DESY test-beam with various read-out solutions: GEMS, micro-MEGAs

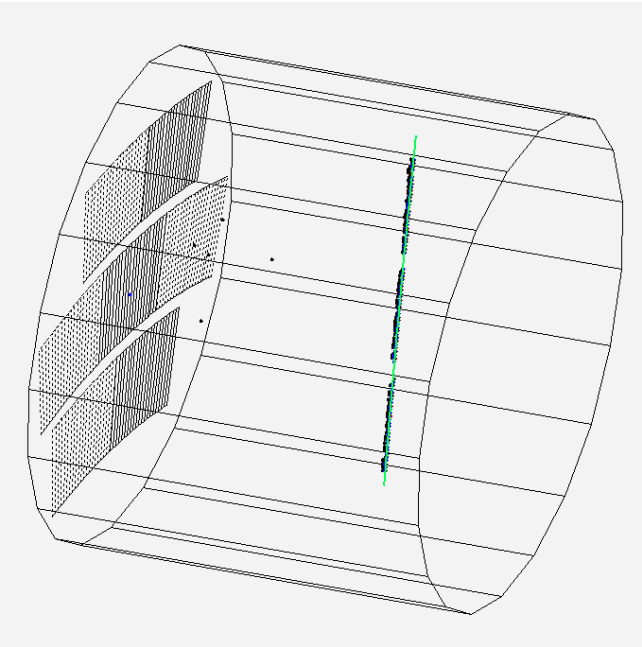

Required point resolution is achieved with both GEMS, μMegas

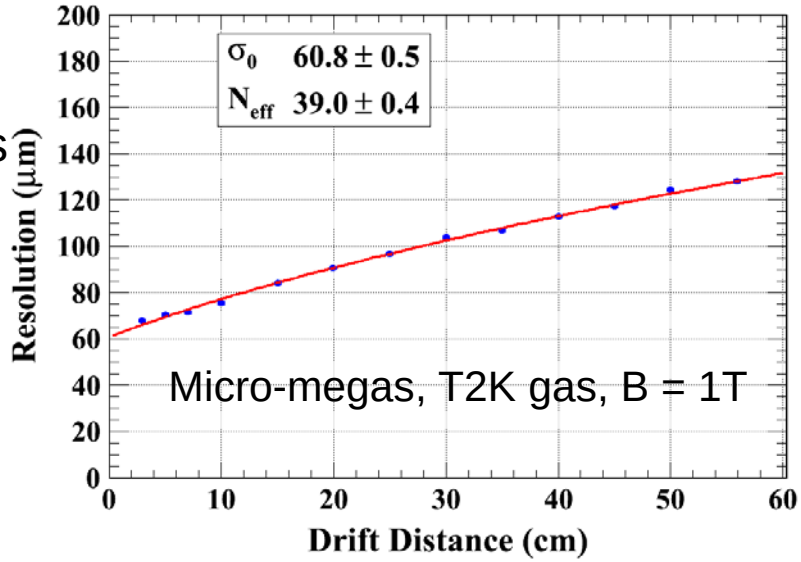

Momentum resolution studies in progress

Design studies of advanced (thin) endplate

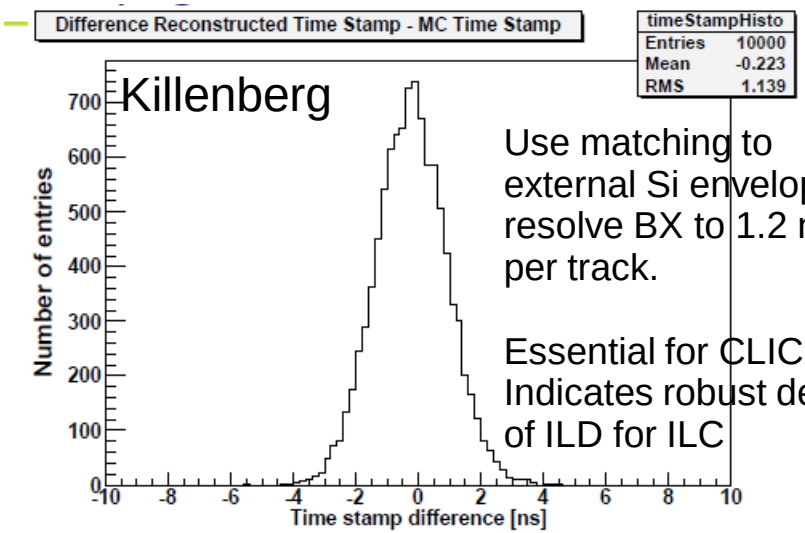

Use matching to external Si envelope, to resolve BX to 1.2 ns per track.

Essential for CLIC. Indicates robust design of ILD for ILC

Particle-Flow Calorimetry

Many on-going efforts particularly in CALICE

Many results now published. Much work still to do

New prototypes coming online: notably US DHCAL and W-Scint HCAL and development of technological prototypes

Significant progress in ILD on reconstruction tools for Scint-strip/W ECAL and semi-digital HCAL

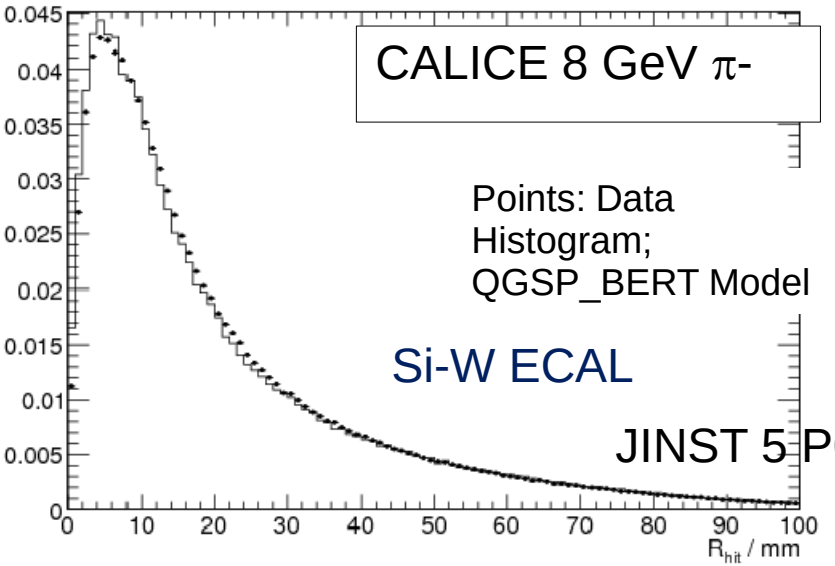

JINST 5 P05007 (2010)

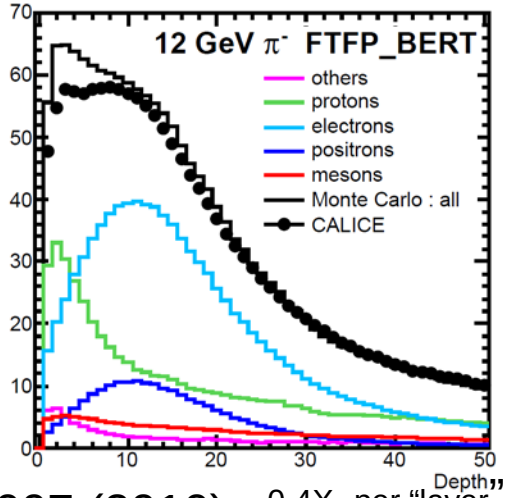

$0.4X_0$ per "layer"

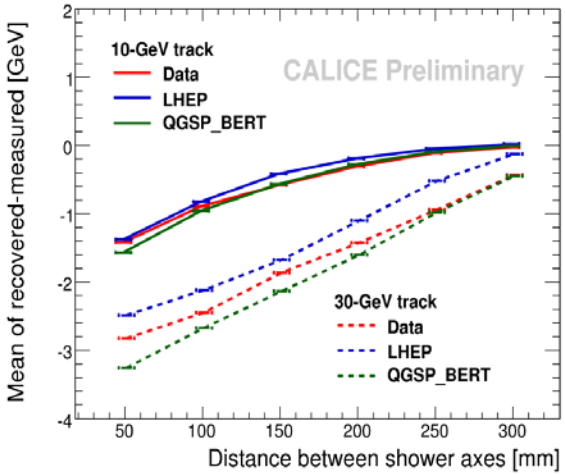

Overlay of test-beam hadrons

Particle-flow is now well established not just within the ILC community.

ILD + CALICE can reach informed decisions on calorimeter options readiness

Particle flow at high energy ?

Studied using CLIC version of ILD (4T field and 8 λ W barrel HCAL)

ILD concept with minor tweaks is likely to perform very well at high energy. (note no background effects included in these plots).

This is a case where detector studies extrapolated to the CLIC case are helping confirm the basic robustness of the ILD detector design for the ILC.

1) Performance

★ Now tested for jets in range 45 GeV – 1.5 TeV

ILD

E_{JET}	RMS_{90}/E_J
45 GeV	3.6 %
100 GeV	3.1 %
180 GeV	3.0 %
250 GeV	3.3 %

CLIC_ILD

E_{JET}	RMS_{90}/E_J
45 GeV	3.6 %
100 GeV	2.9 %
250 GeV	2.8 %
500 GeV	3.0 %
1 TeV	3.2 %
1.5 TeV	3.2 %

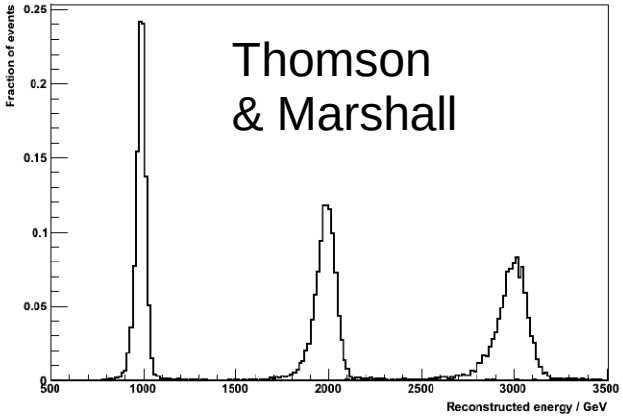

Jet Energy Resolution better than 3.6 % over whole range

IWLC2010, Geneva Mark Thomson 4

Summary

ILD is progressing towards the DBD

Significant loss of manpower during the last months

- Partly to CLIC (may come back after CLIC CDR)
- Partly due to changes in funding (end of EUDET, UK situation, etc)

Strong focus of ILD for the DBD is on understanding the integration of the detector and its impact on the overall detector design

Significant progress in improving the simulation for DBD

Work in progress on improving the reconstruction

Collaboration with CLIC has been very positive particularly in areas of major concern for CLIC (example: background studies)

Next major ILD meeting at KEK in May – around time of next PAC.

Personal Accelerator Cost-Performance Remarks

- Clearly the ILC detector community wants to do physics, and we welcome the work of the GDE to put the overall project on a firm technical and financial footing.
- In addition to deciding on a new accelerator baseline, one needs to make sure that the physics and detector community appreciates the “beyond the baseline” options and accelerator upgrades that would still be feasible and that doors are not closed unnecessarily.
- Some of these are:
  - Energy upgrade
  - Lumi upgrade
  - Positron polarization improvement, electron polarization improvement.
  - e- e- collisions
  - Beam-strahlung conditions.
  - Physics at low energy: WW threshold, Z pole.
- We will have a stronger physics case if we can include realistic options beyond the baseline in making the physics case (remember we will never know for sure all the physics - that is what science is all about!)