HINS R&D

Giorgio Apollinari

Fermilab Accelerator Advisory Committee

May 6-8th, 2008

Talk Outline

- **Introduction and History**
- **Motivation and Reminder of R&D Objectives**
- **Schedule and Budget Status**
- **Progress Report**
  - Accelerator Components

ThisTalk

  - R&D facilities
  - System Integration
- **Future Efforts Considerations**
- **Conclusions**

Webber's Talk

Introduction and History

- **HINS (High Intensity Neutrino Source) Research Program was created by the end of CY2005 with the postponement of an *ILC-like* Proton Driver proposal**
- **Program designed to allow US involvement in the R&D of high-intensity, low-energy acceleration of hadron beams for possible use in Front-End applications**
  - SPL @ CERN, JPARC @ KEK, FRIB @ ANL/MSU
- **Program based on exploration of alternative and innovative solutions.**

Introduction and History (2)

- **HINS remained a small R&D effort from FY06 to Dec07, when the consolidation of the Project X proposal (with an *ILC-identical* 8 GeV Linac) revived the interest in Front-End Development.**
  - Limited M&S and, especially, manpower resources
  - High priority emergencies (LHC triplet problem) further reduced availability of critical cryogenic expertise
- **Dec07 ILC re-dimensioning allowed small increases of efforts in several R&D and Support projects**
  - 3.9 GHz, Acc. Supp. & TD Op., HINS, Nb3Sn LHC quad.
- **An early assessment of Project X design can consider the adoption of HINS technology for the FE.**

HINS and Project X

- **HINS can provide the path to a multi-MW 8 GeV physics/accelerator program and support a muon facility**

	Proton Driver Phase 1 Design (0.5 MW)	Proton Driver Phase 2 Design (2 MW)	HINS capability	Project X Design	
Particle	H-	H-	H+ then H-	H-	
Nominal Bunch Frequency/Spacing	325 3.1	325 3.1	325 3.1	325 3.1	MHz nsec
Particles per Pulse	15.6	15.6	37.5 *	5.6	E13
Pulse Length	3	1	3/1	1	msec
Average Pulse Current	8.3	25	~20	9	mA
Pulse Rep. Rate	2.5	10	2.5/10	5	Hz
Chopping -6% @ 89KHz and 33% @ 53MHz	37.5%	37.5%	0 - 37.5%	37.5%	
Beam Power @ 8 GeV	0.5	2.0	-	0.36	MW
Bunch Intensity	2.5 41	7.6 122	6.1 98	2.7 ** 44	E8 pC

HINS R&D Mission & Objectives

- **Mission, unchanged from ~2 years ago –**
  - To complete the R&D necessary to establish technical credibility and cost basis for a Linac front-end by ~2010-2011
  - Joint APC,AD,TD effort
- **Demonstrate high power RF distribution and 4.5 msec pulse operation of multiple cavities from a single klystron**
- **Demonstrate performance of 325 MHz IQM modulators for amplitude and phase control of multiple cavities**
- **Measure axially-symmetric beam performance with room-temperature crossbar spoke resonator cavities and SC solenoid focusing in the RT Linac**
- **Demonstrate beam acceleration at energies above 10 MeV using superconducting spoke resonator RF structures**
- **Demonstrate nsec beam chopping capability at 2.5 MeV**
- **Demonstrate performance of this Linac design concept and the resulting beam quality to 60 MeV**

Beam-line 60 MeV Linac Layout

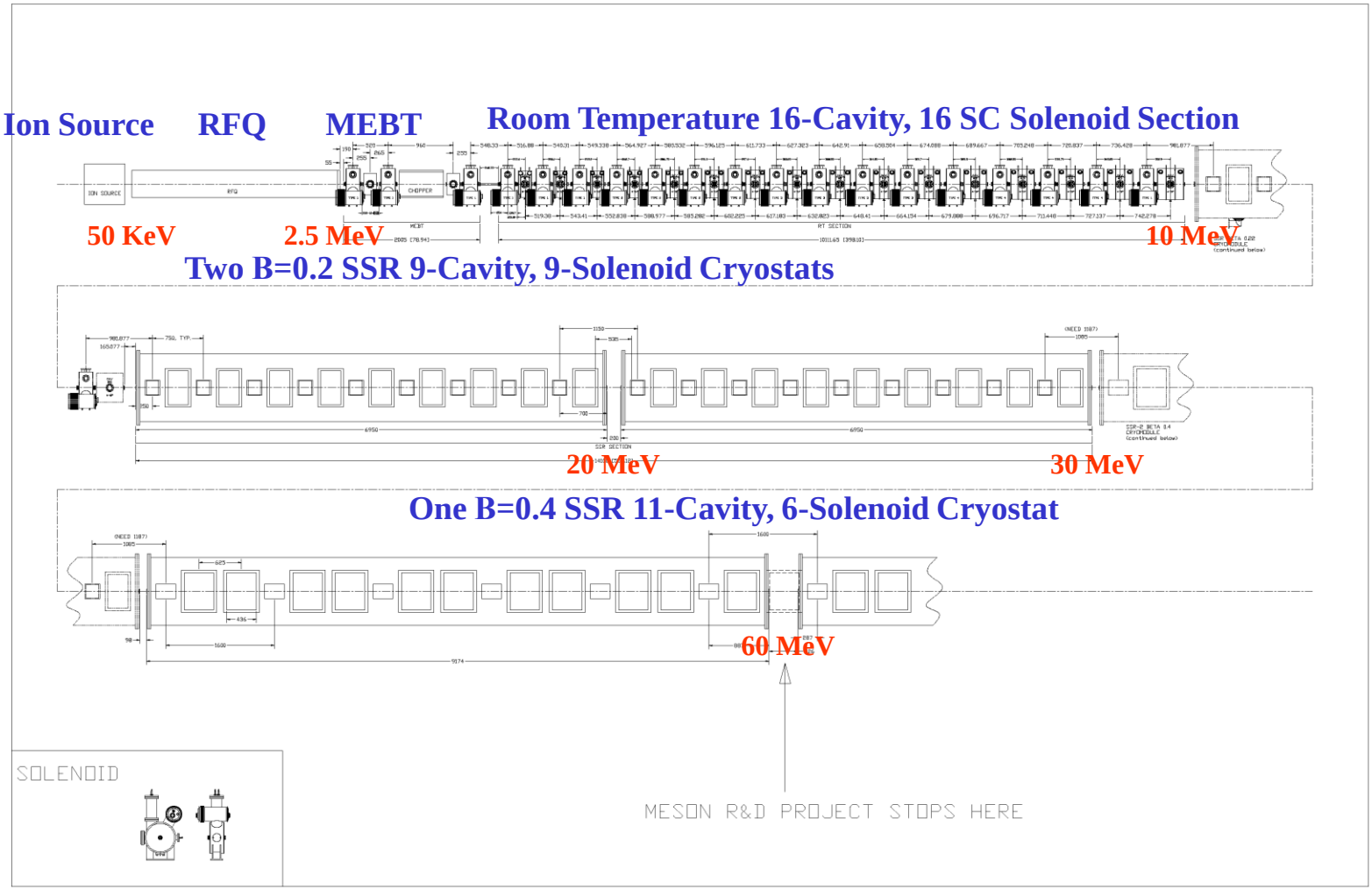

Work Planned in '06

HINS Front End - Stages (1)

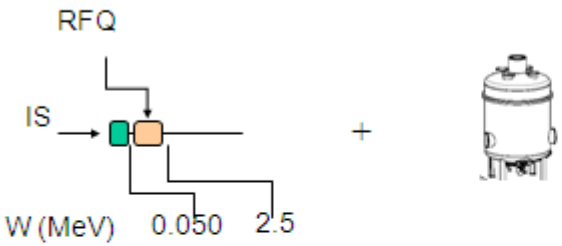

- **End FY06/Beg FY07**
  - Klystron/Modulator/Power Distribution
  - RFQ
  - Test Cryostat/Prototype SSR
  - Klystron & Power Distribution

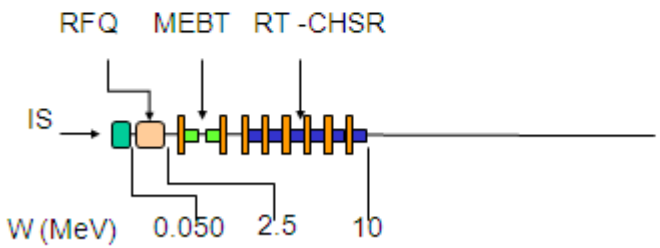

- **End FY07/Beg FY08**
  - RT Cavities
  - Focusing Solenoids
  - Buncher Cavities

Fermilab *AAC May '06* 15

NS Front End - Stages (2)

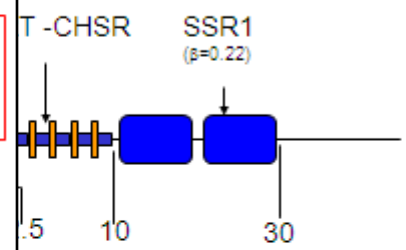

- **End FY08/Beg FY09**
  - 2 SSR1 cryostats
  - Chopper & PS
  - Linac Operation

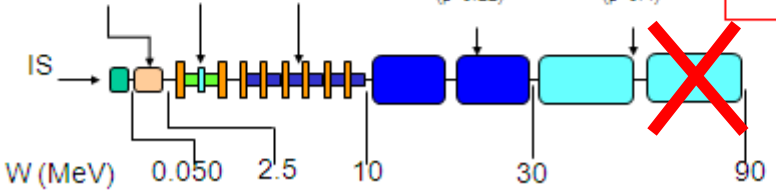

- **End FY09/Beg FY10**
  - 1 SSR2 cryostat
  - Linac Operation

Fermilab *AAC May '06* 16

M&S Cost – Plans (`06) vs Reality

HINS M&S Procurement Plans in FY07-FY09

Cost	*FY05 Estimate*	*FY07-FY09*
• Ion Source-LEBT	350 kS	100 kS
• RFQ	1200 kS	~ done
• MEBT	220 kS	*~ 400 kS*
• RT	1130 kS	1130 kS
• SSR1 Cryo 1-2	3365 kS	*~ 4228 kS*
• SSR2 Cryo 3-4	6468 kS	~~*~ 5260 kS*~~
• IQM	3586 kS	*~ 2000 kS*
• Klystron	600 kS	~done
• Modulator	783 kS	~done
• (beam diag., LLRF..)	1430 kS	1430 kS
• Civil	-	300 kS
• Total	19,132 kS	~~~14,848 kS~~

2,630 k$

12.2 M$

- Hard to keep FY06 level of HINS Collaboration in out years
- Descoping venue: eliminate Cryo #4

Fermilab *AAC May '06* 20

- **M&S Expenditures**
  - FY07 2.33 M$
  - FY08 (7 mo.) 1.35 M$
- **By the end of FY08 we project ~ 5.03M$ total HINS expenditures**
  - 7.2 M$ left to go according to original plan
  - Reality cross-check estimates CTC at 8.5 M$
- **At a funding level of 2.5-2.8M$/y, completion of large M&S procurement by end of FY11**

Manpower

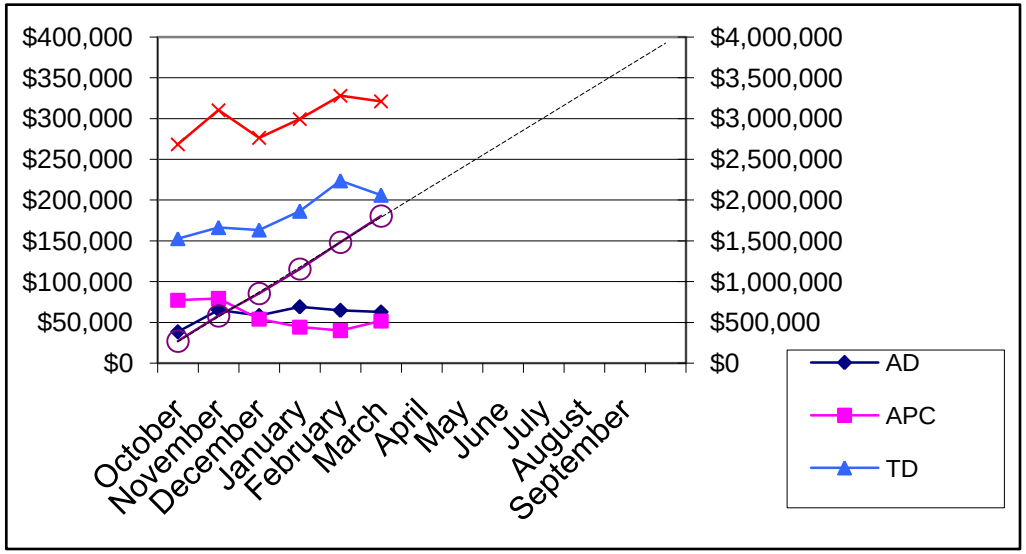

- **Labor Expenditures**
  - FY07 2.99 M$
  - FY08 (6 mo.) 1.80 M$
- **Even the small influx of redirected ILC manpower has increased the effort by ~30%**
- **Major hurdles**
  - Design: SSR1 Cryostat
  - Meson Integrations:
    - RF power distribution system
    - Low level RF systems
    - Cryogenics delivery system
    - Power Distribution (magnets, IQMs)
  - Meson Operation
    - Beam instrumentation systems

RFQ Status

- **Order to Accsys, CA**
  - Change of ownership, initially estimated “only” ~6 mo delay in delivery
  - Vane machining OK (rms 20 μm) – Sep ‘07

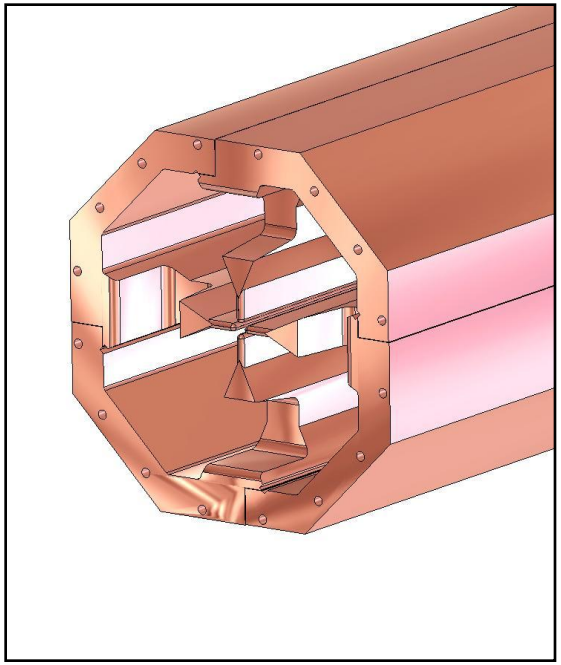

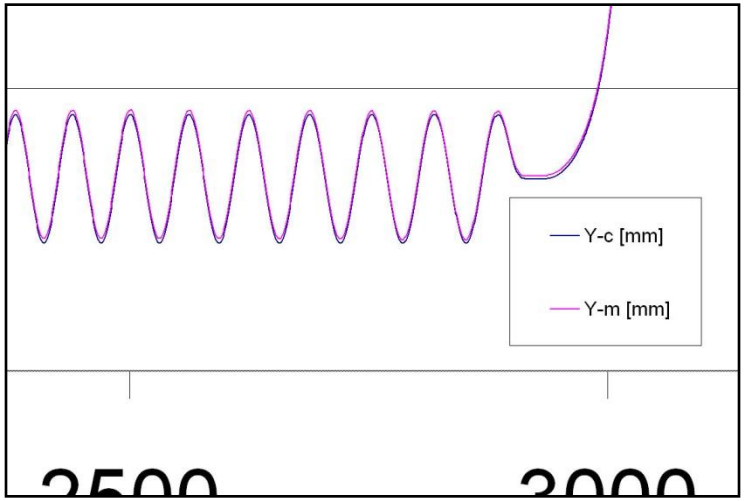

RFQ Status

- **Assembly Problem**
  - Large field tilt not tunable
  - Problem solved by retuning output end

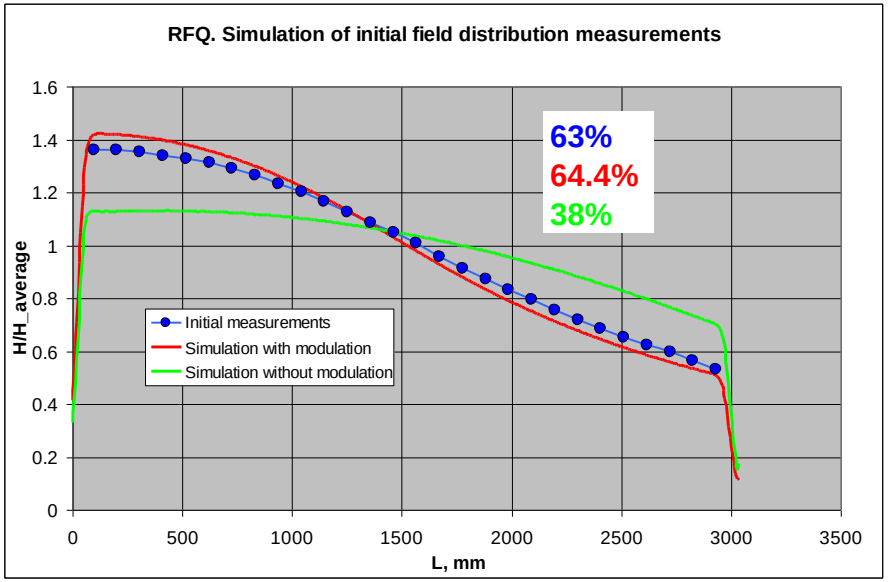

Fig. 4

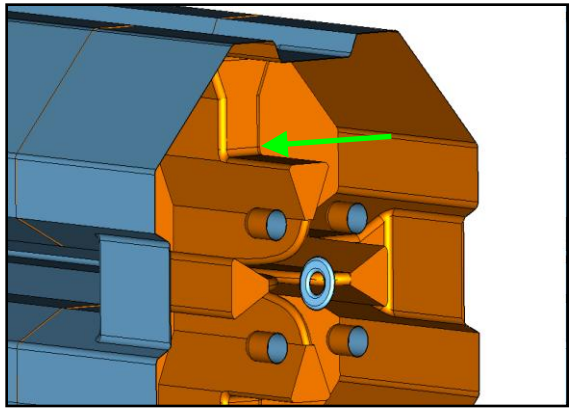

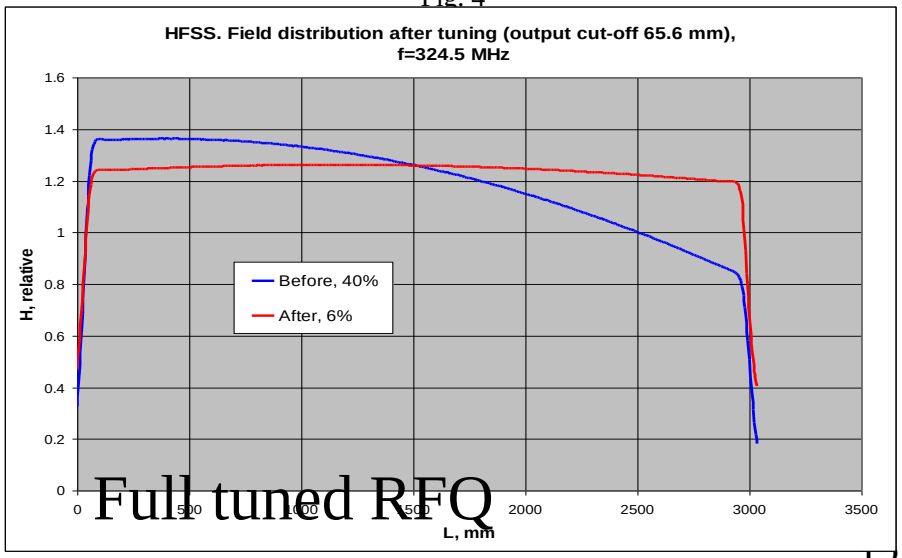

Full tuned RFQ

RFQ Rework (Apr. '08)

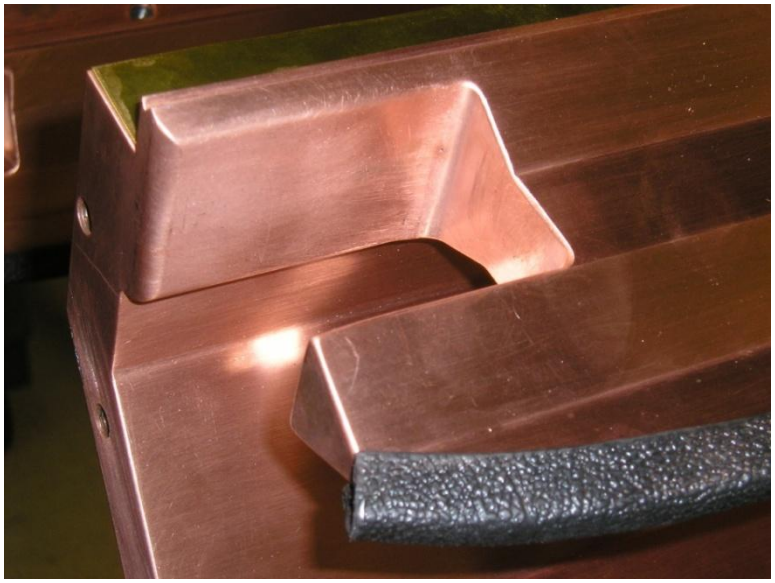

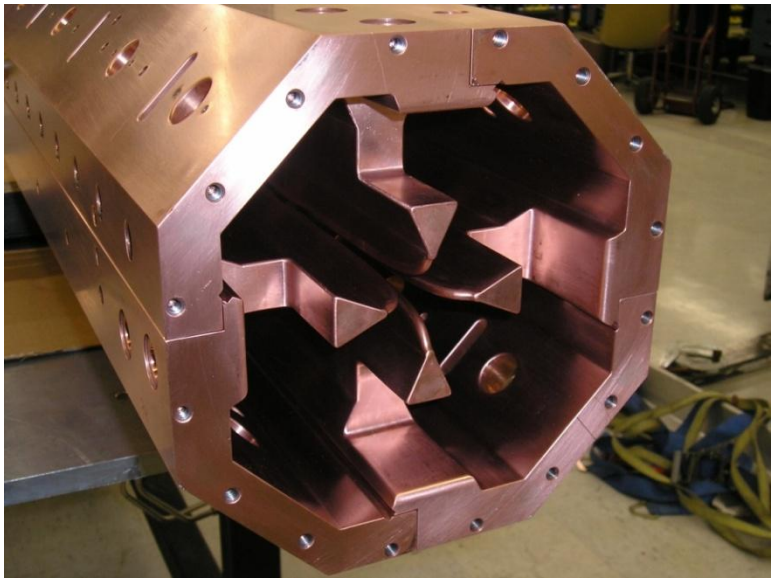

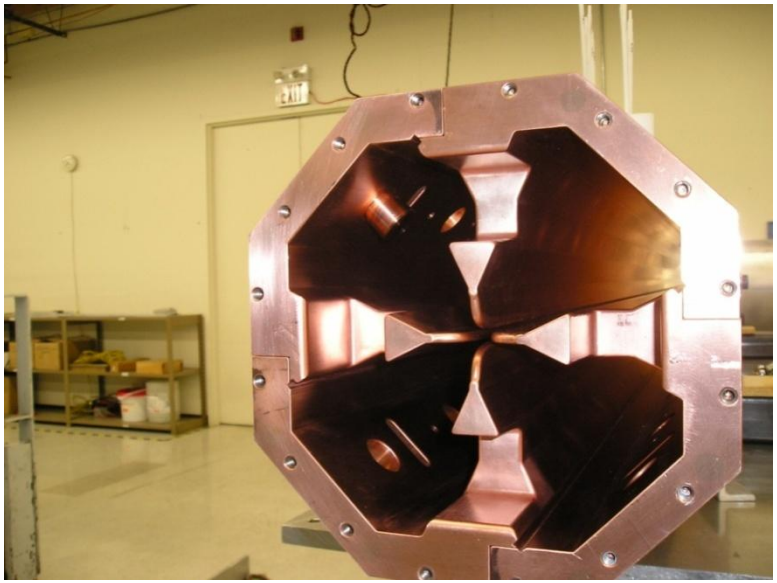

Buncher Cavities

- **MOU with LBNL to machine cavities**
  - Copper coated Steel @ Berkley, machining starting
- **Order to JPAW to produce power couplers, tuners and pick-up loops**

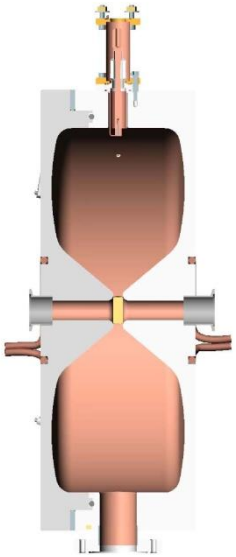

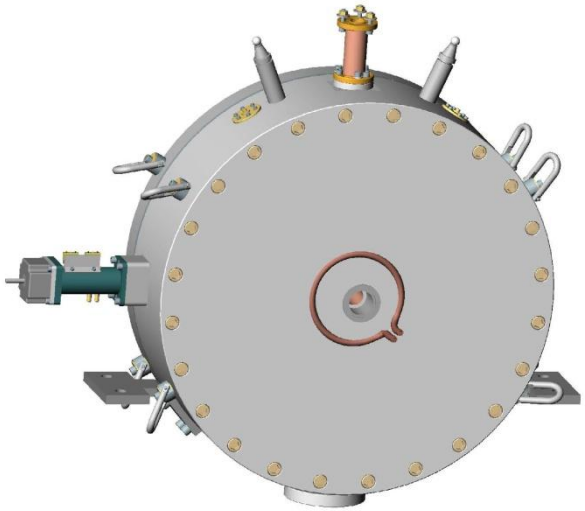

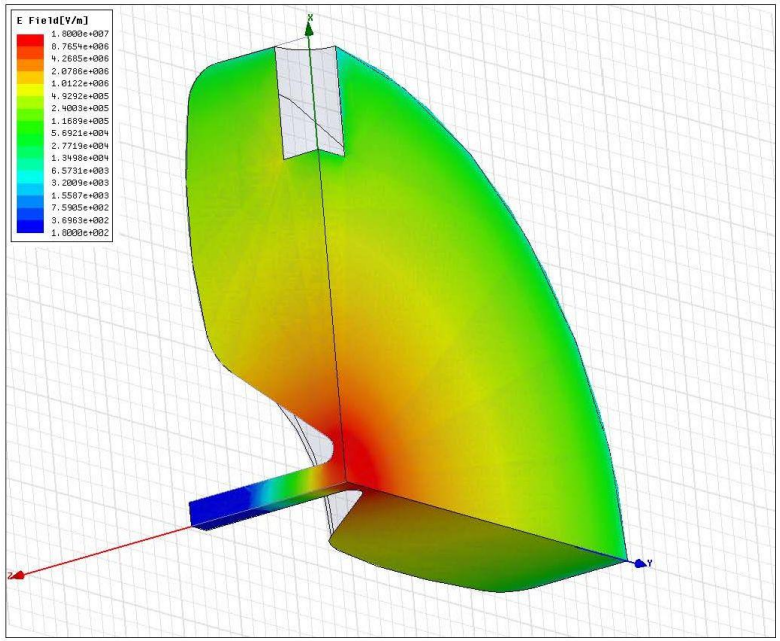

16 RT Cavities

- **Cavity #1 & #2 fully tested (LLRF and HPRF)**
- **Cavities #3 & #4 under testing (LLRF)**

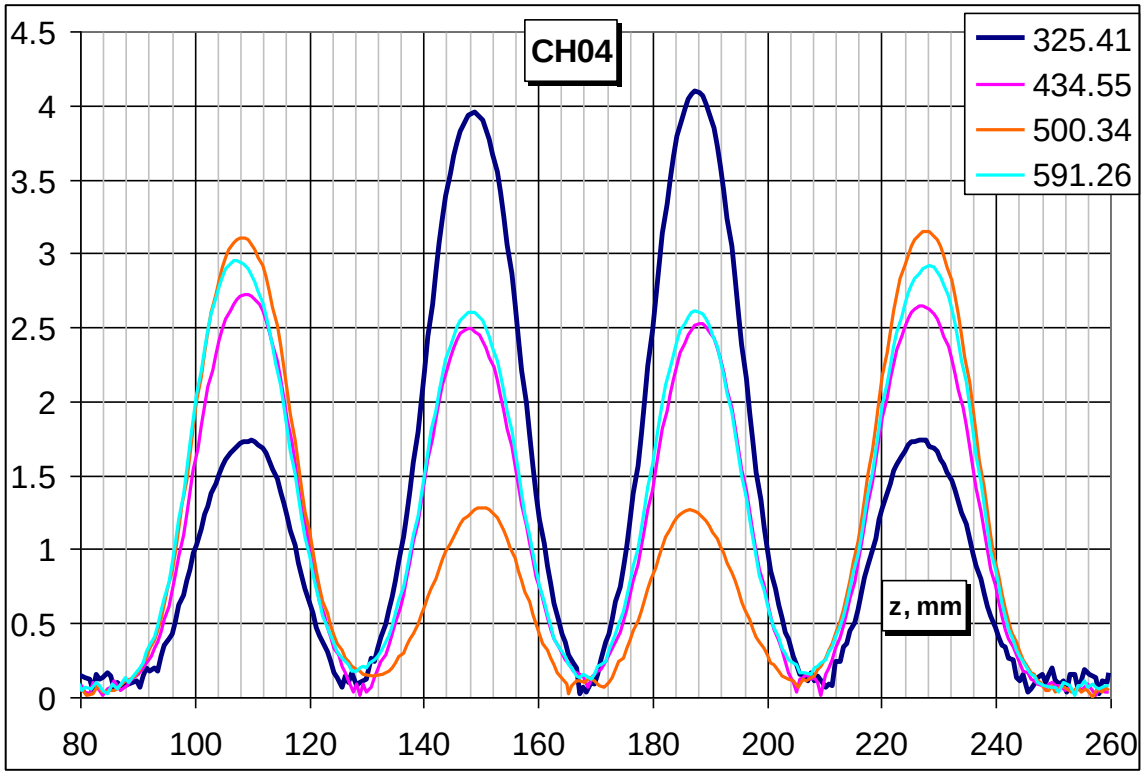

RT Cavities

- **Cavity #5 to #16 (4-spoke) under production**

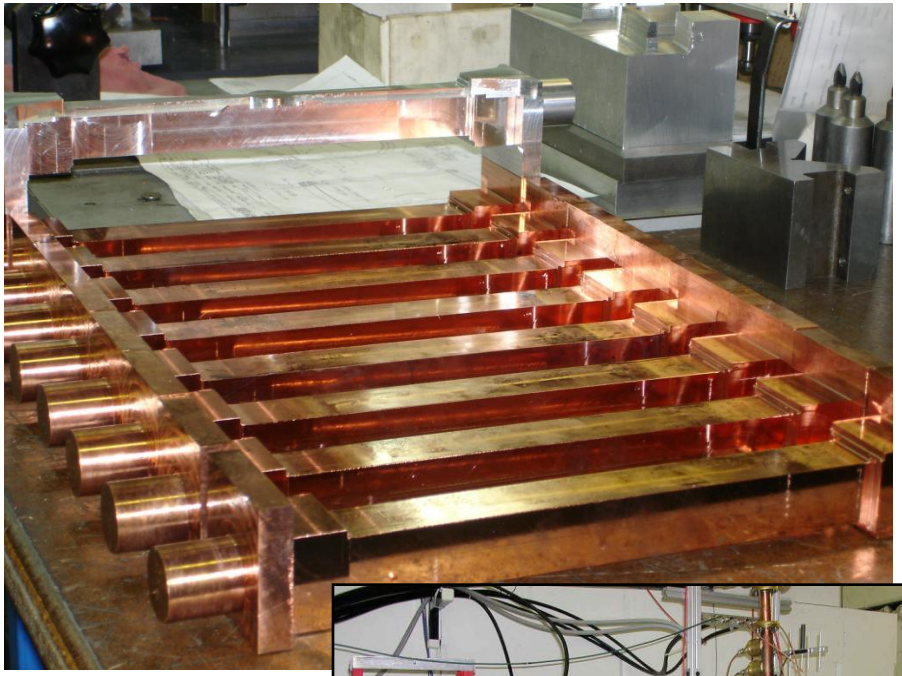

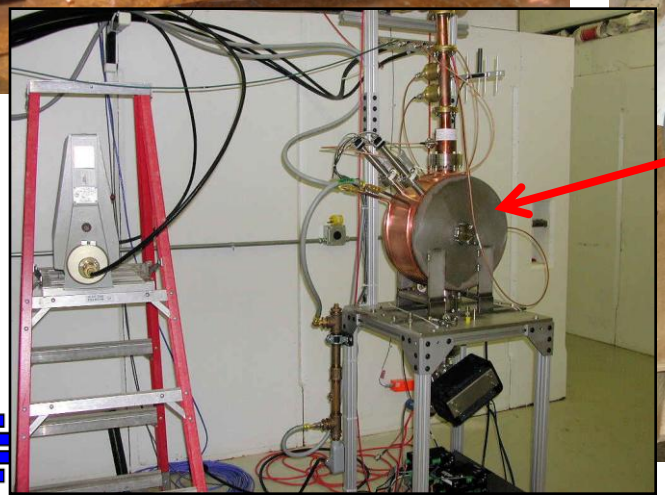

RT Focusing Lenses

- **Focusing Solenoids will provide axis-symmetric beam**
  - Reduce beam halo formation
- **Integral field spec requires SC magnet (~180 T^2 cm)**
- **Coil prototyping completed after construction of ~5 models**
- **Order placed with Cryomagnetic**
  - 13 coils w/o correctors
  - 10 coils w correctors
- **FNAL prototype tech to transfer technology by visit to company.**

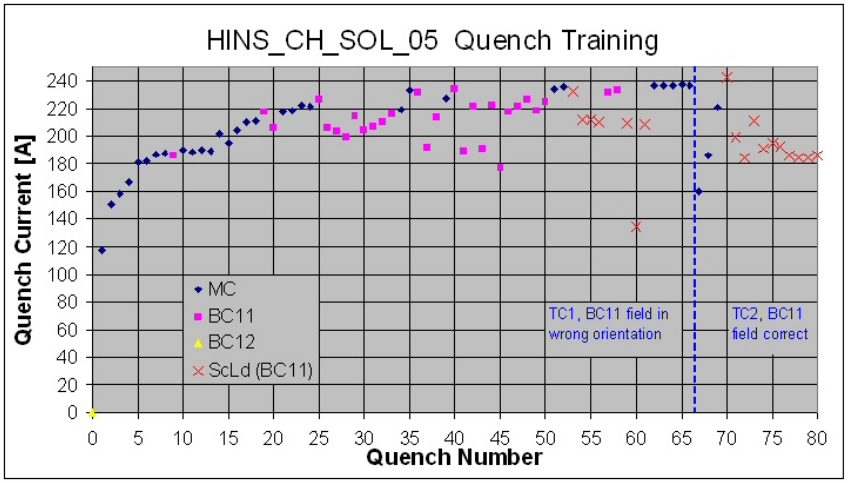

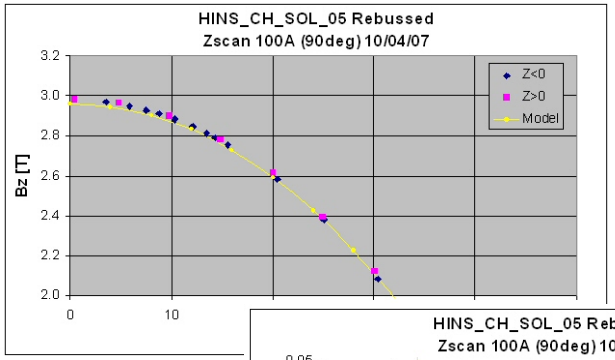

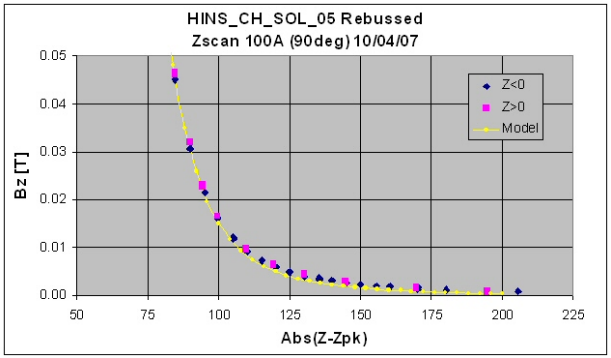

Fermilab

RT Solenoid Cryostat

- **Prototype Cryostat Completed**
- **Test planned in ~May-June ’08**
  - Funding limited procurement of ~50% cryostats

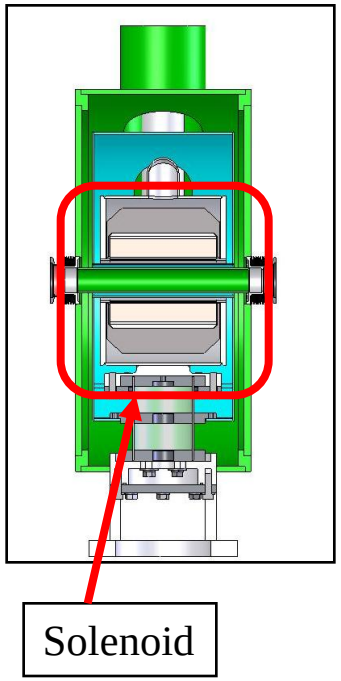

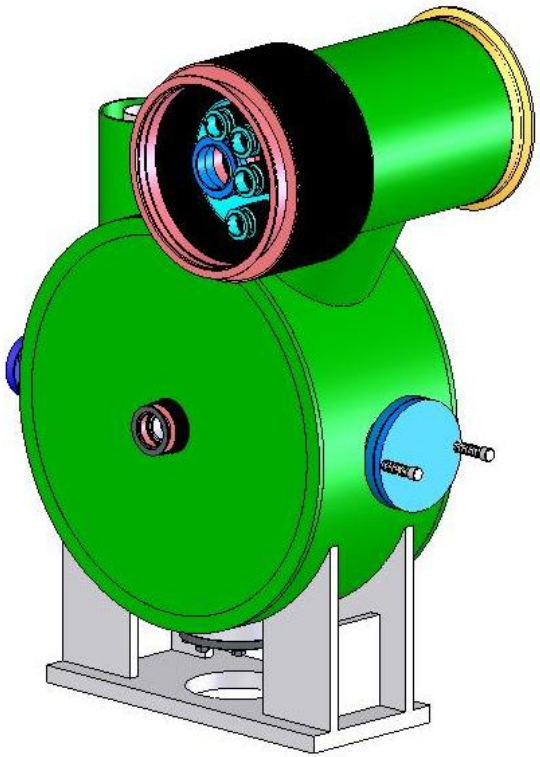

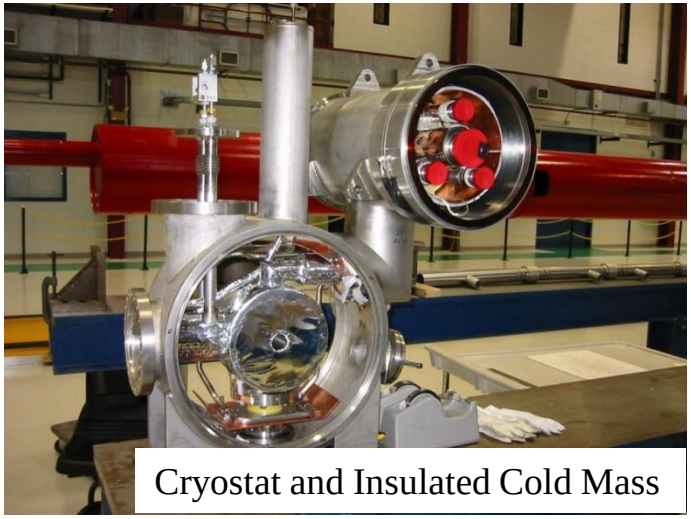
Cryostat and Insulated Cold Mass

“Last” weld

SSR1-001

- **First 325 MHz SC Spoke Cavity tested in March ’08**
  - Constructed at Zanon
  - Processed (BCP) at ANL
  - Tested at FNAL (TD VTS)

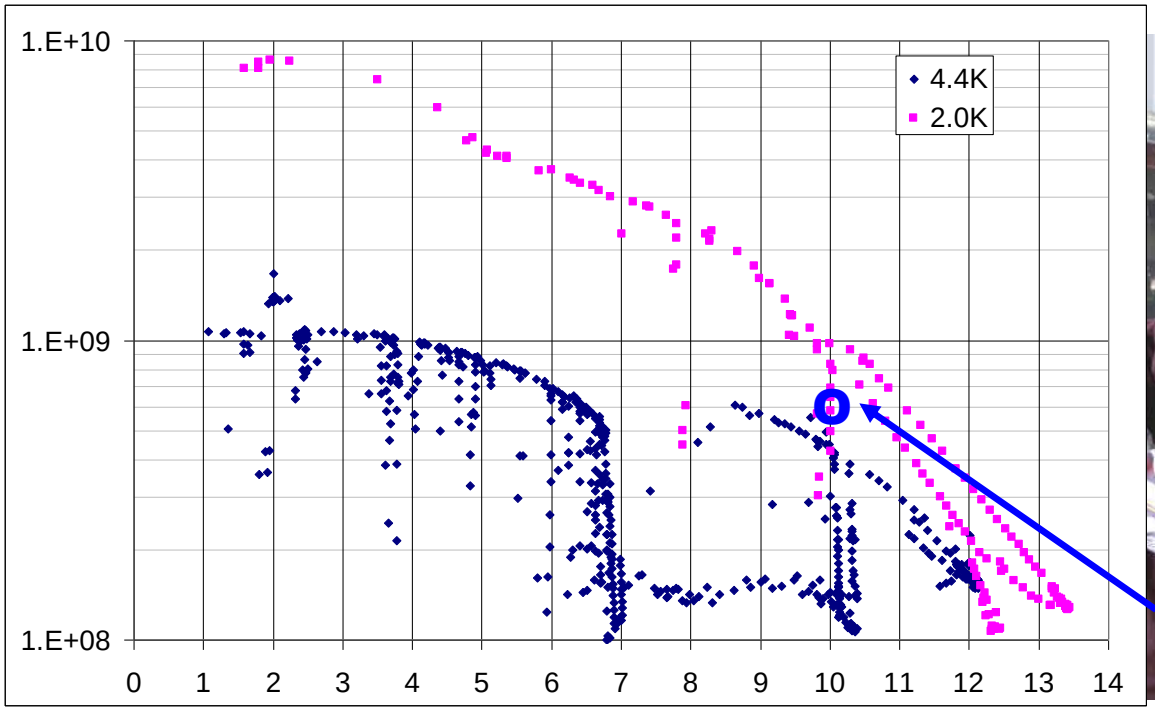

SSR1-002 to 004

- **SSR1-002 built in US (Roark-IN)**
  - US Industry development
  - Cavity at FNAL by Summer
- **SSR1-003 & 004 to be built in India (IUAC) as part of a collaborative MOU**

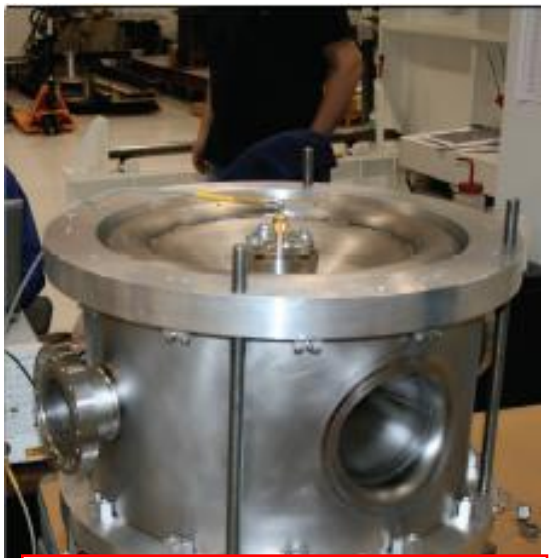

Final Welding Fixture @ Roark

IUAC

Test Cryostat

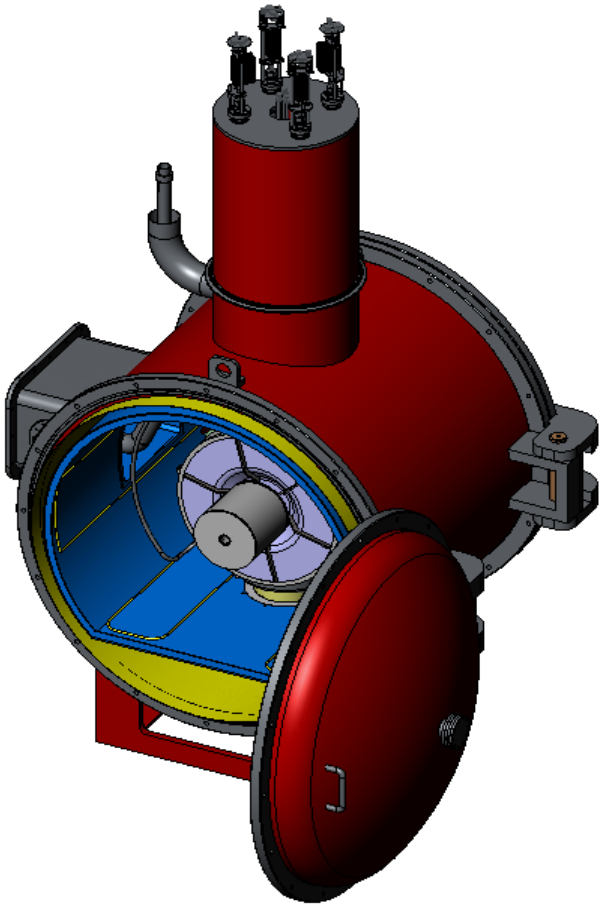

- **Vacuum Vessel**
  - All major components are machined and welded
  - Delivery expected in ~2 weeks
- **Magnetic Shield**
  - All parts being annealed. Ship date on May 5th
  - SSR1 Test Cryo
- **Thermal Shield and MLI**
  - Order placed. Delivery expected in late May
- **Support posts**
  - First prototype assembled and tested
- **Internal Piping**
  - Preliminary design modeling complete. Iterating on final design. Needs detailed design and engineering note. Revisiting relief calculations for TSR.

Next “Beam Element” Engineering Hurdle

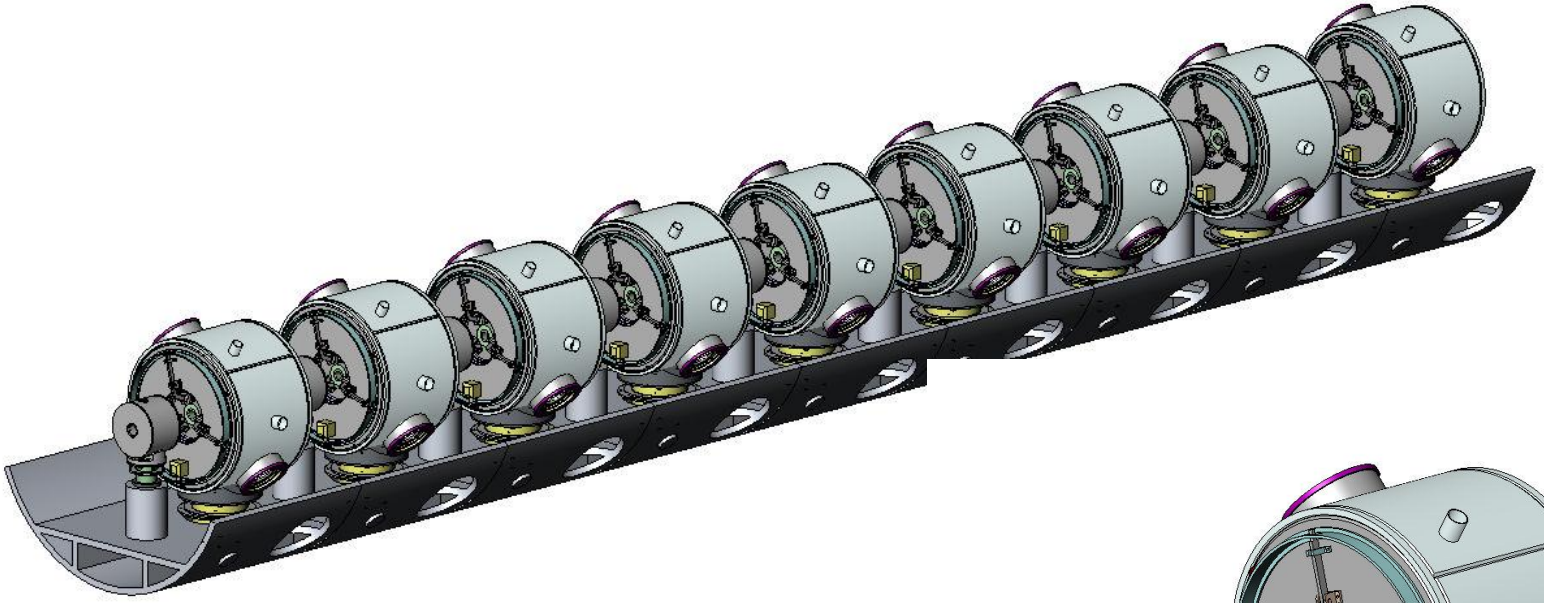

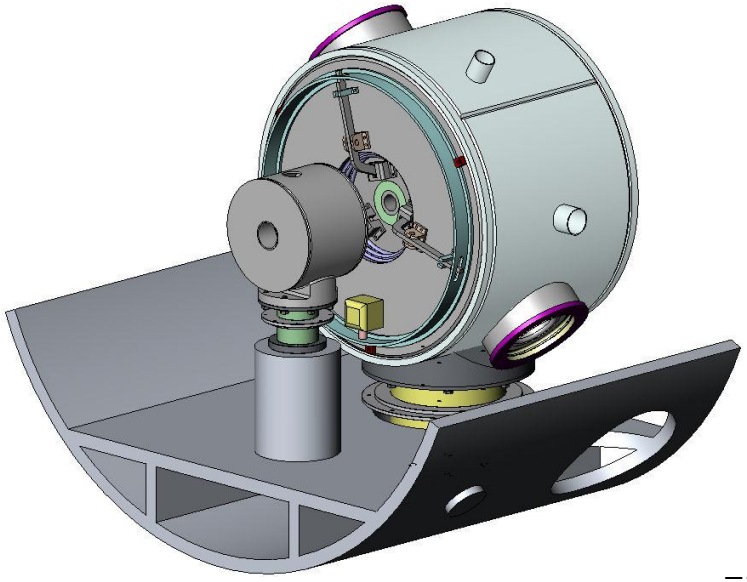

Conclusions

- **The HINS R&D program has achieved some major results in the last year.**
- **Problems have surfaced and have been resolved by unique skills in AD, TD and APC.**
- **A completion date in FY10 for the 60 MeV beamline appear optimistic. It is reasonable to expect a completion of major M&S procurements in FY11.**
  - This completion date is still in time to provide input to a 2012 PrX startup.

- **More on system integration and commissioning in the next talk**