NFMCC Experimental Program and Plans

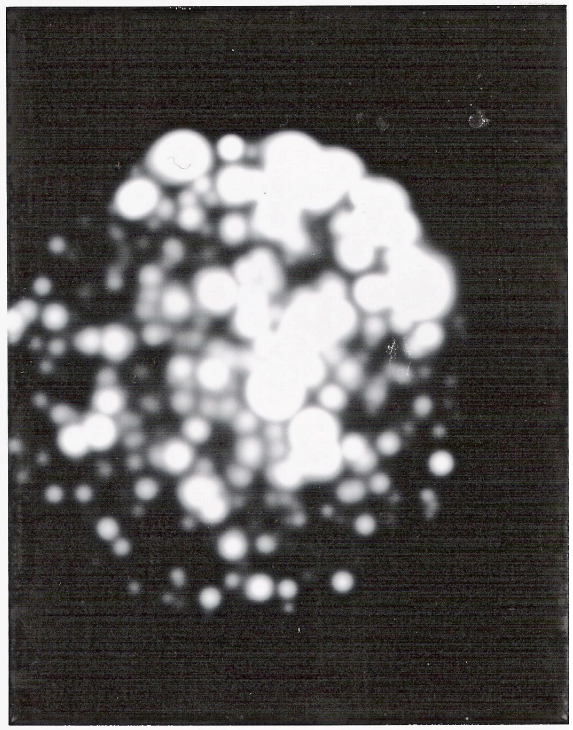

Yağmur Torun

ILLINOIS INSTITUTE OF TECHNOLOGY

Transforming Lives.Inventing the Future.www.iit.edu

MuCool

Neutrino Factory

Muon Collider

AAC Review

Aug 9, 2007

Fermilab

MICE

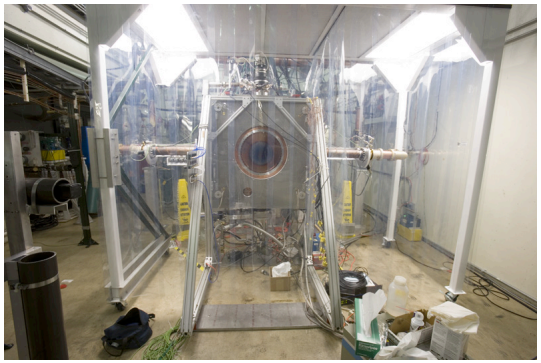

NFMCC, MuCool and MICE

- Neutrino Factory and Muon Collider Collaboration (NFMCC) aims to tackle technical challenges of Neutrino Factories and Muon Colliders
- MuCool (Fermilab) is developing components for muon ionization cooling
  - Liquid hydrogen absorbers
  - Rf cavities
  - Magnets
  - Instrumentation
  - High power testing in beam
- MICE (RAL) is a system test of a cooling channel section
  - SFoFo cooling cell
  - Low intensity (single-muon)
  - Software bunching
- All are international collaborations

Y. Torun

Ionization Cooling

- Muon lifetime is 2.2μs, traditional beam cooling techniques not applicable
  - Ionization cooling works "at the speed of the muon"

$$\frac{d\varepsilon}{ds} = -\frac{\left\langle \frac{dE}{ds} \right\rangle}{\beta^2 E}(\varepsilon - \varepsilon_0)$$

Normalized emittance in solenoidal channel

Equilibrium emittance

$$\varepsilon_0 \sim \frac{\beta_\perp}{\beta \left\langle \frac{dE}{ds} \right\rangle X_0}$$

Solenoidal focusing

Rf cavities

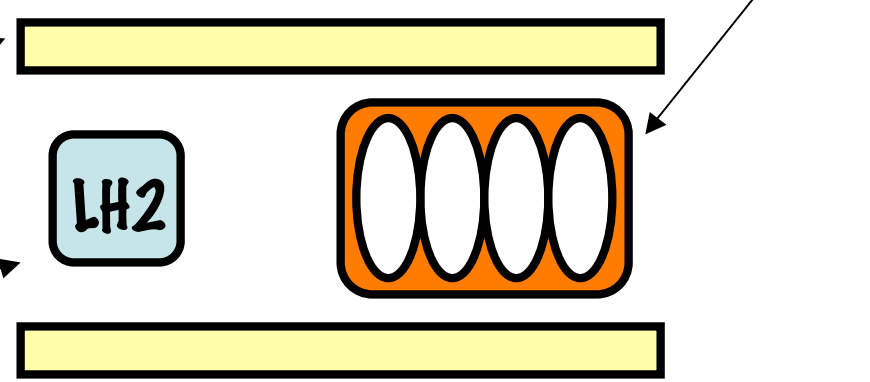

30 MeV/m

μ-momentum

MuCool Collaboration

- Aims to
  - design, prototype and test all cooling channel components
    - perform high-power beam tests
    - support MICE
- Collaborators from US, Japan, UK - national labs & universities
- Spokesperson: A. Bross

- RF development
  - ANL
  - Fermilab
  - IIT
  - Imperial
  - JLab
  - Lancaster
  - LBNL
  - Mississippi

- Absorber R&D
  - Fermilab
  - IIT
  - UIUC
  - KEK
  - Mississippi
  - NIU
  - Osaka
  - Oxford

- Beam diagnostics
  - ANL
  - Fermilab
  - IIT
  - Princeton

- Solenoids
  - LBNL

Y. Torun

Thin Window R&D

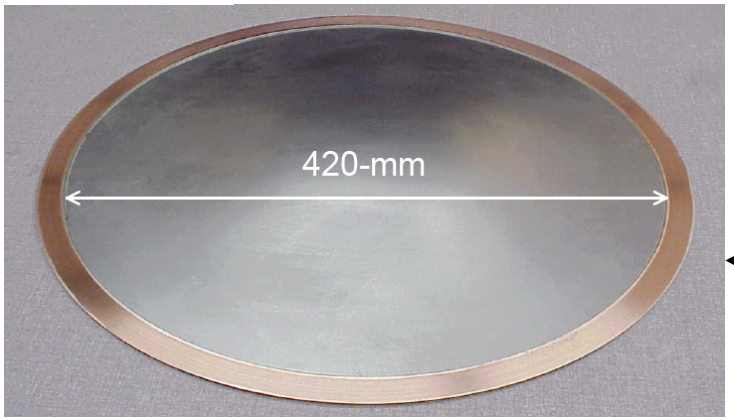

Absorber, vacuum, rf cavity windows

Curved Be window
constant thickness

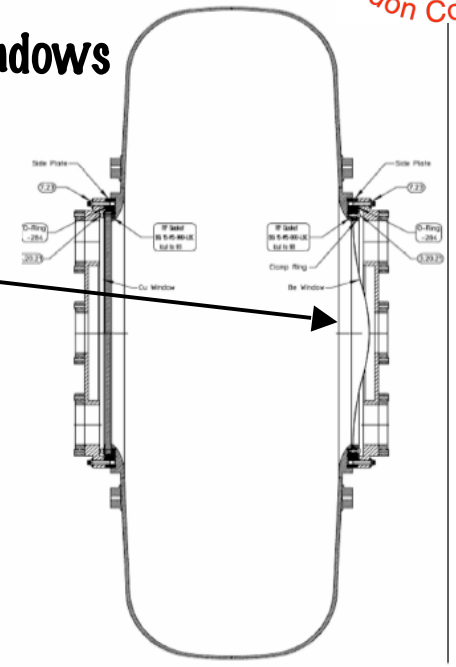

Doubly inflected (bellows) Al window
optimized thickness profile
for absorber body

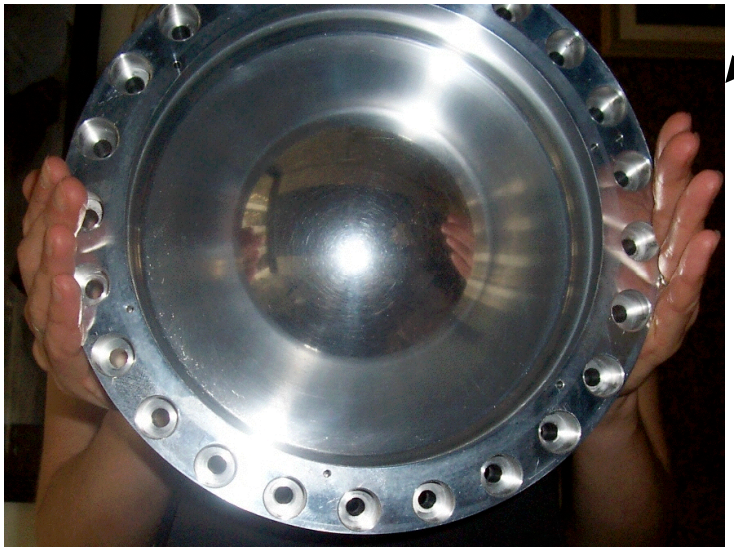

MICE convection
absorber in AFC
module

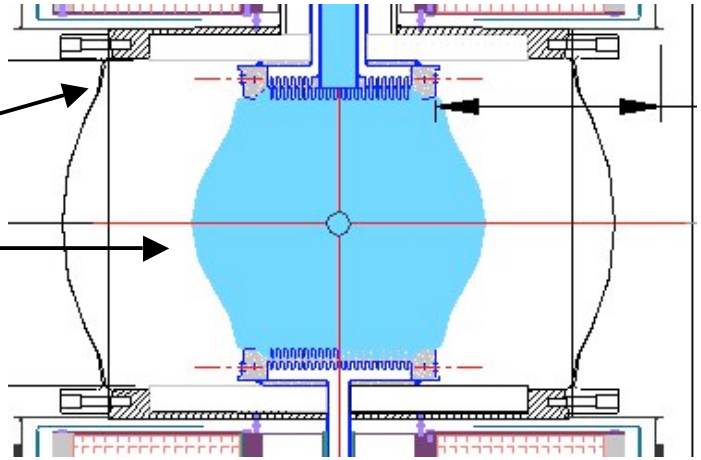

Y. Torun

Absorber R&D

- Liquid Hydrogen
  - Forced flow
    - Force LH2 flow to external heat exchanger
    - turbulence inducing nozzles
  - Convection
    - beam and internal heaters set up internal flow
    - GHe heat exchanger acts on absorber walls
    - KEK absorber tested at MTA
- Solid LiH

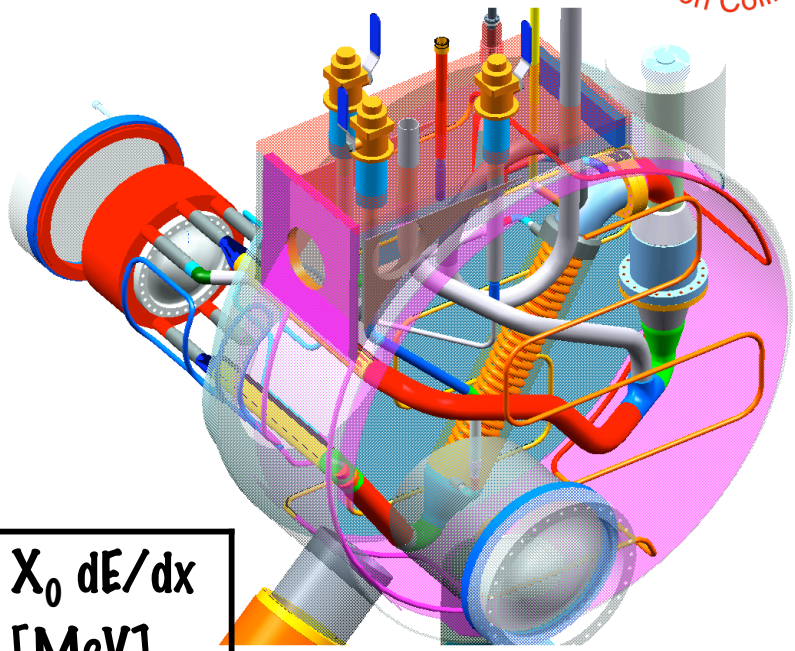

Material	X_0 dE/dx [MeV]
GH2	259
LH2	254
G/LHe	183
LiH	151
Li	136

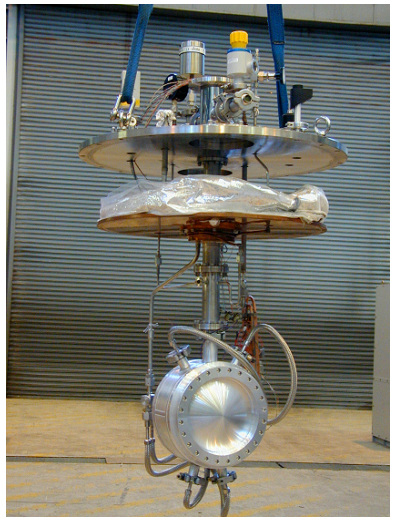

Y. Torun

LiH Absorber R&D

Casting in glove box under Ar gas atmosphere:
- Solid LiH granules to be heated in stainless steel "ladle" to 100 F above melting point of LiH (1372 F or 750 C)
- Molten LiH poured into container, vibrated as the LiH solidifies
- Remove screws and nuts, slide the end cover out

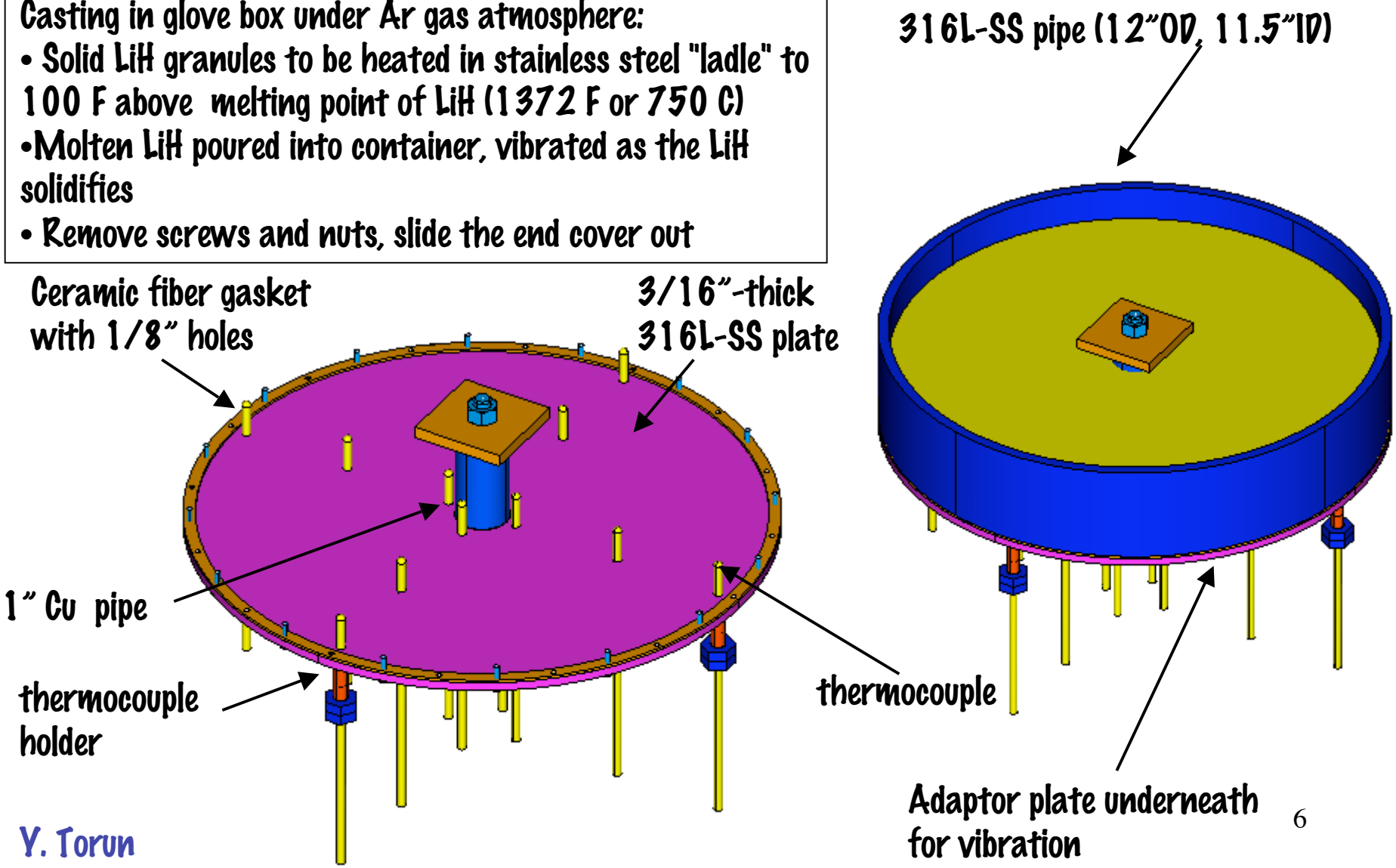

Y. Torun

LiH Absorber R&D

Thermal Test Setup

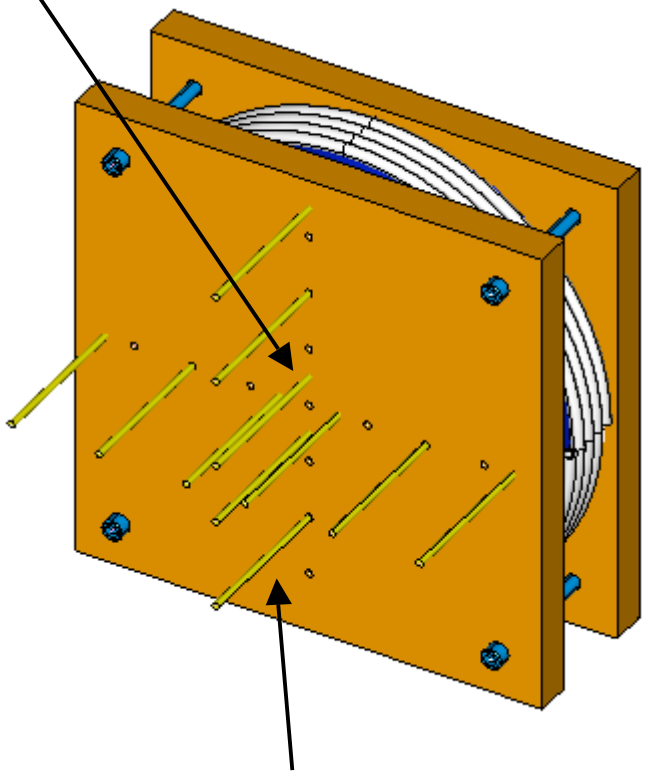

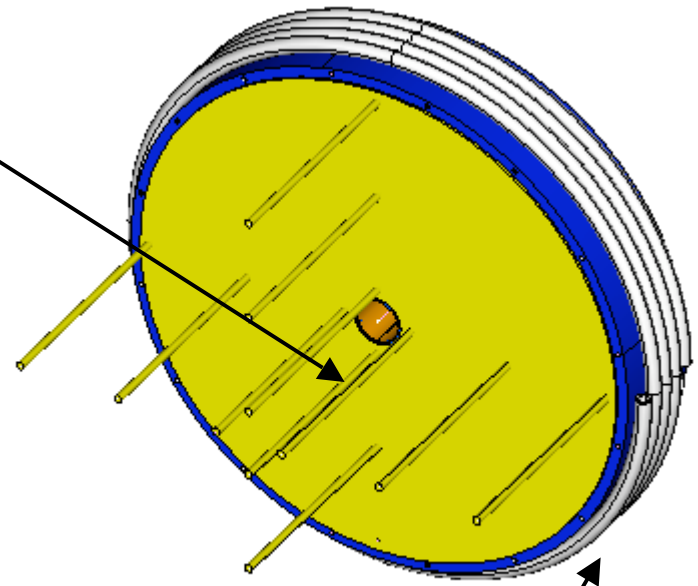

Rf Cavity R&D

- Demonstrate reliable operation in high magnetic field
  - Common to practical cooling schemes (NFMCC baseline)
- Systematic study of breakdown for NC rf in high magnetic field
  - Develop general understanding, explore connection to rest of rf research community (ILC, CLIC, ...)
  - Surface studies through atom probe tomography and molecular cluster simulations (J. Norem ANL, Northwestern)
- Measure rf-induced background rates, spectra and noise for MICE
- Map cavity performance as a function of magnetic field for MuCool/MICE
- Identify and test promising materials, surface treatment, coatings

RF Issues

- High-gradient Cu rf cavities in high magnetic field is a significant R&D risk for NFMCC
  - Magnetic field focuses dark currents and lowers onset of breakdown
  - Ionization cooling channel packed with high-stored-energy cavities with thin windows in high magnetic field
  - In MICE, tracking detectors next to rf cavities are subject to x-ray backgrounds
- We need to demonstrate reliable and low-background operation

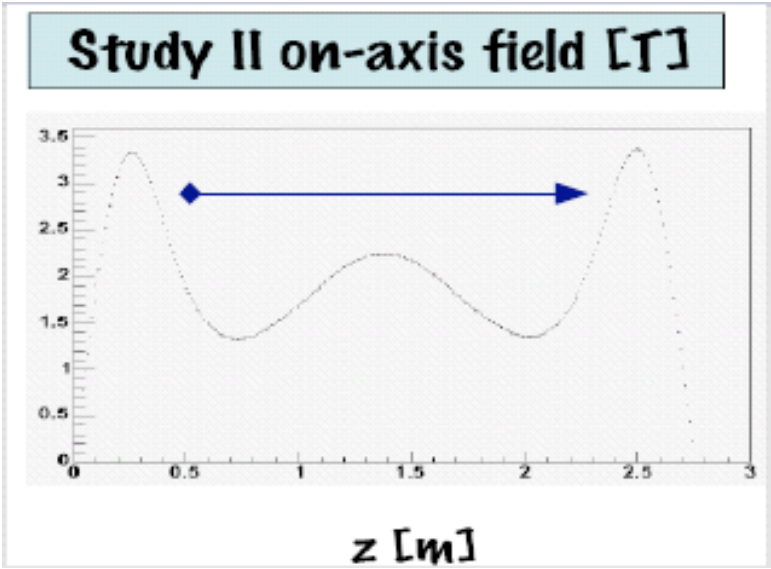

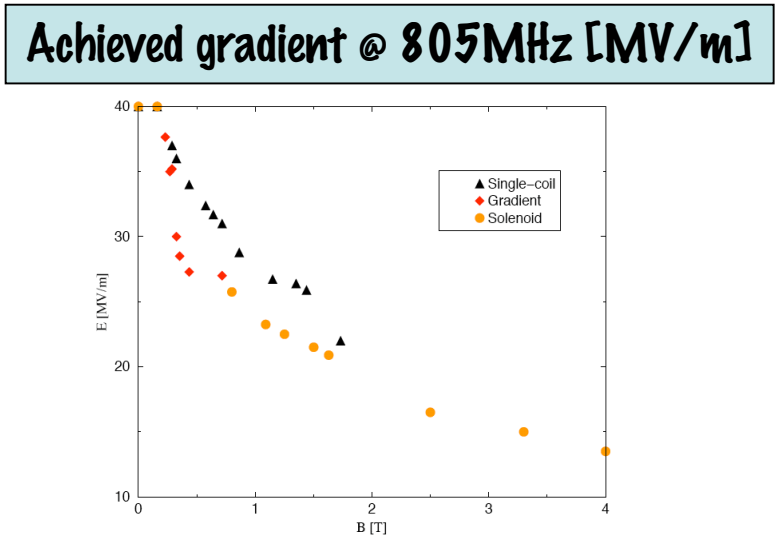

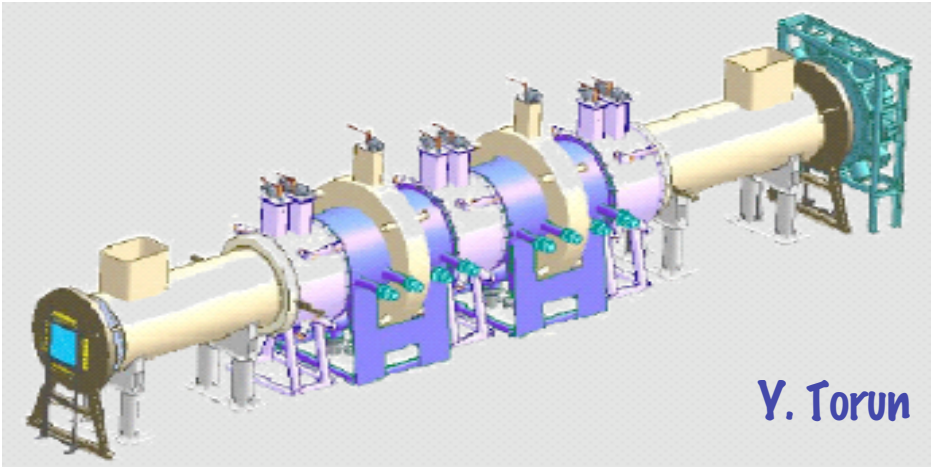

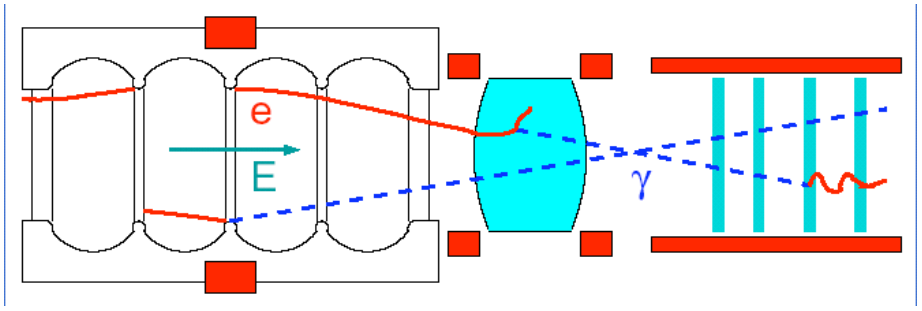

Dark Currents

- Precursor to breakdown
- Electrons tunnel through work function of metal
- Current rises very steeply with field (hard to make measurements)

$$j_{FN}(E) = \frac{A}{\phi}(\beta E)^2 exp\left(-\frac{B\phi^{3/2}}{\beta E}\right)$$

$$n = \frac{E}{j}\frac{dj}{dE} \simeq 2 + \frac{67.4\text{GV/m}}{\beta E}$$

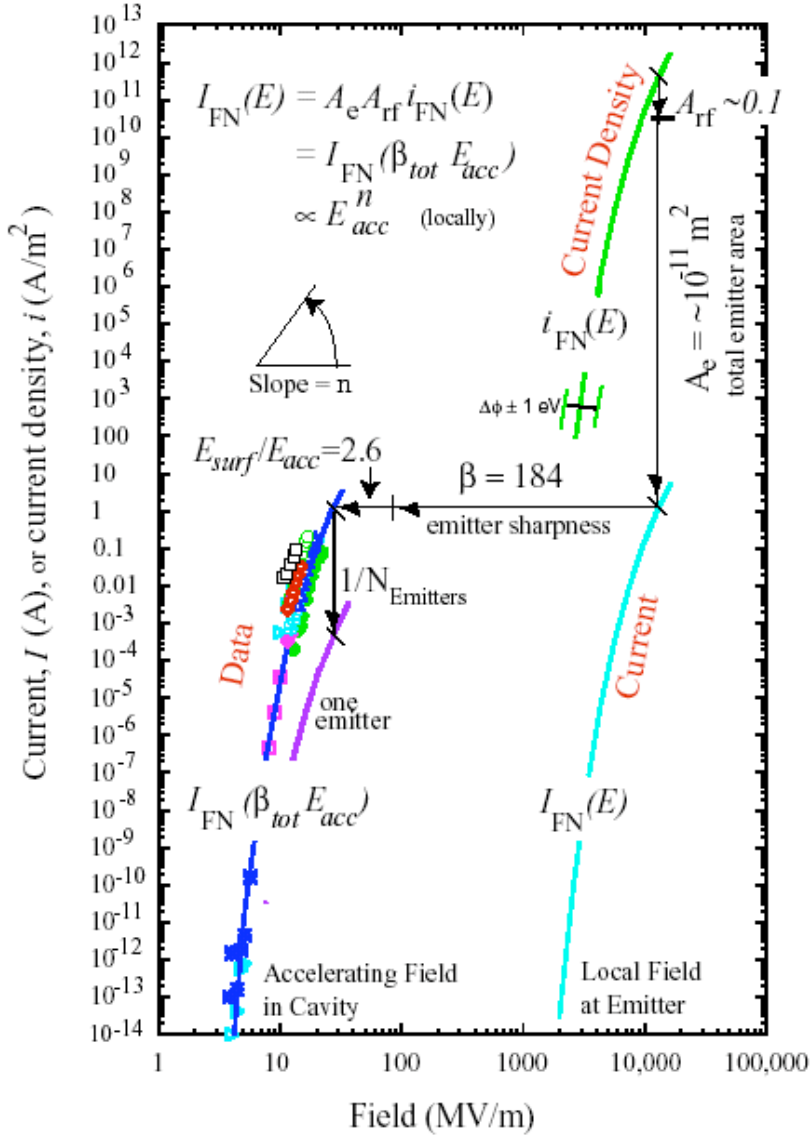

Y. Torun

MuCool Test Area

- MTA now has
  - 5T solenoid(3.5T in gradient mode)
  - 5MW @ 201, 12MW @ 805MHz
  - Cryo infrastructure for LN2, LHe, LH2
  - 805, 201MHz pillbox cavities
  - Detectors and cabling for remote diagnostics
  - Clean room for assembly
- Still to be installed/finished
  - Cryo plant [Spring 08]
  - Beamline [Summer 07-Summer 08]
  - Large magnet (coupling coil) [Fall 08]

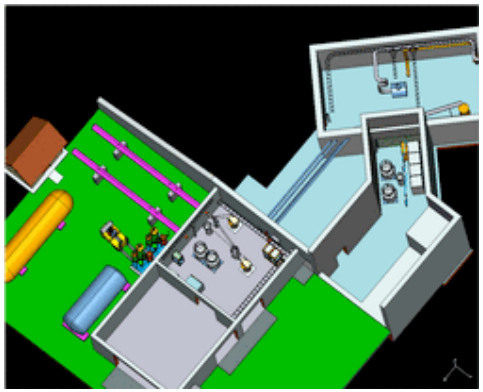

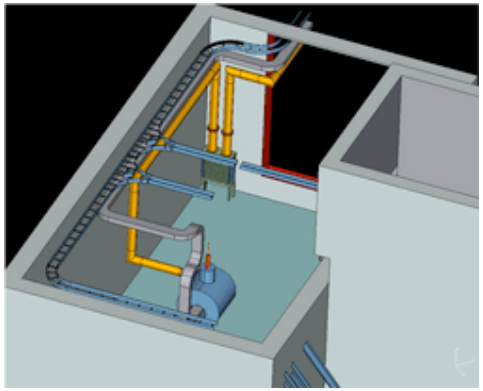

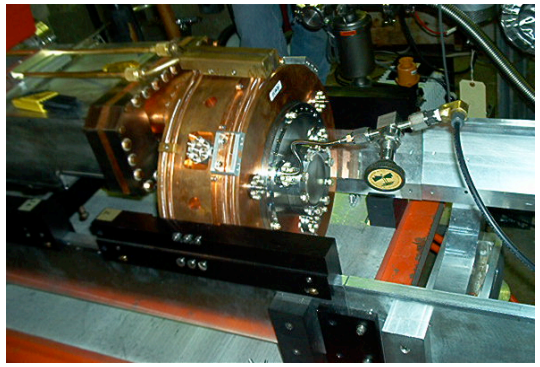

Y. Torun

805 MHz Pillbox Cavity

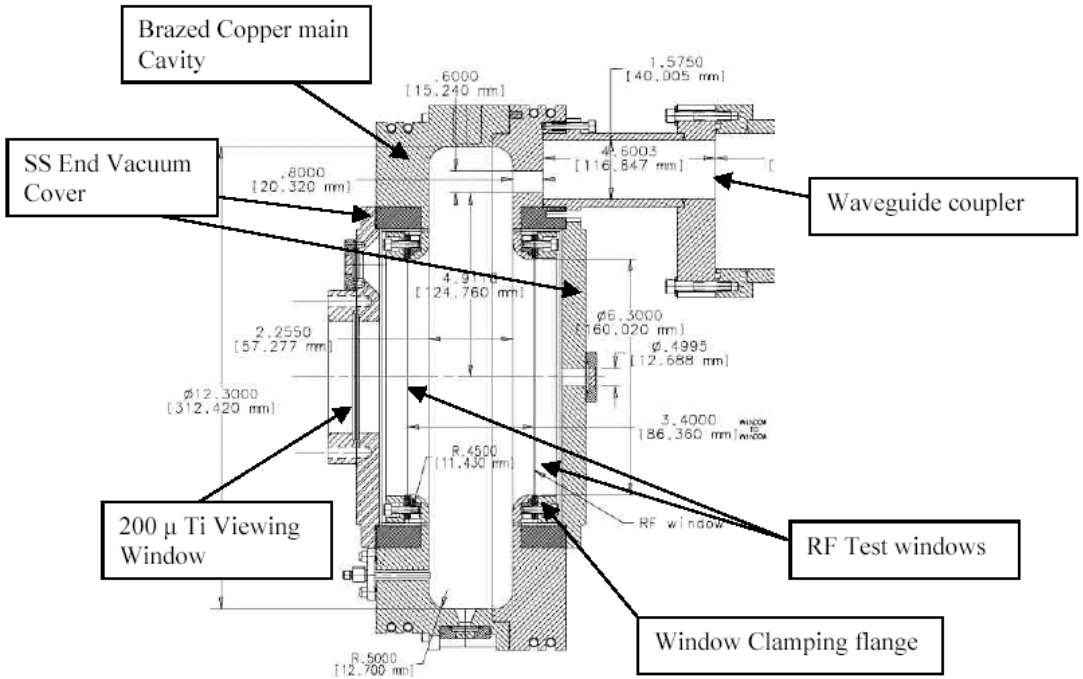

- Quarter-scale model for R&D
- Has been running reliably at design gradient (32MV/m) at B=0
- Stable operation with thin curved Be windows
- B-field dependence mapped out in detail to 4.5T
- Other parameters (pulse width, etc.) can be studied
- Different materials and surface prep explored by use of removable buttons (x1.7 field enhancement)
  - Ta, Mo, MoZr, W, Nb, NbTi, Cu, SS, Cr
  - TiN coating
  - EP, GCIB

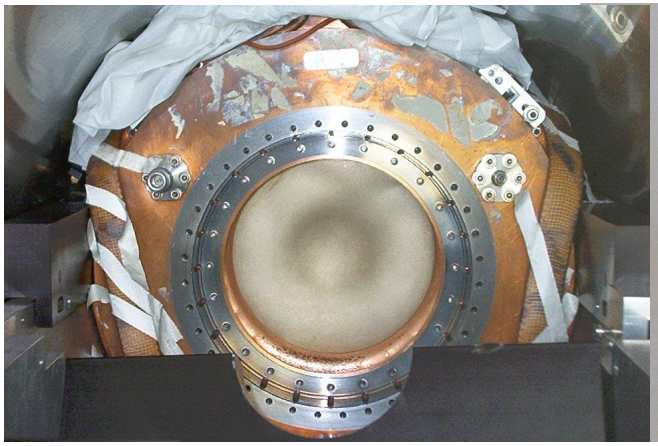

Y. Torun

805 MHz Pillbox Cavity

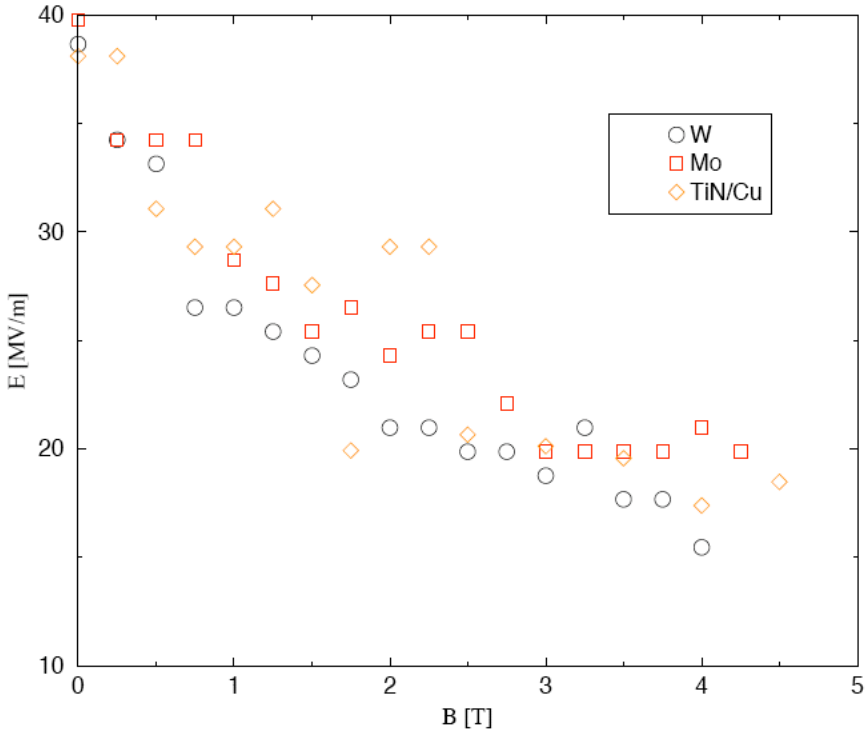

- Currently carrying out button test program with B-field
  - Finished tests with bare Mo, W and TiN-Cu
- TiN coating removed on Cu button
  - But no damage on Cu
  - Reverse of TiN/Be window case
- No visible damage on Mo button
- W button not yet inspected (still installed)

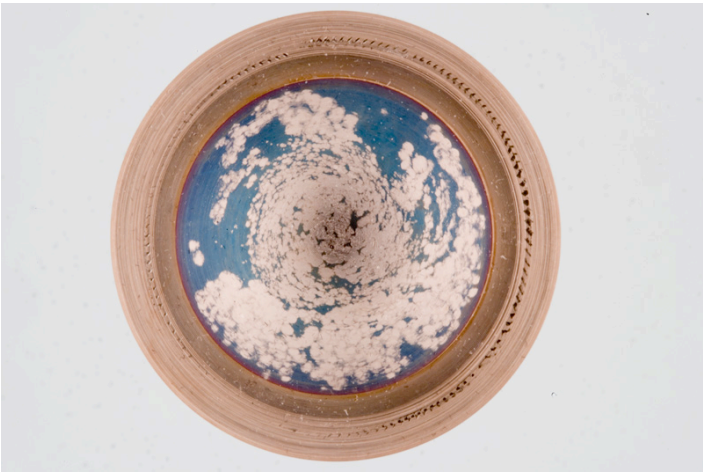

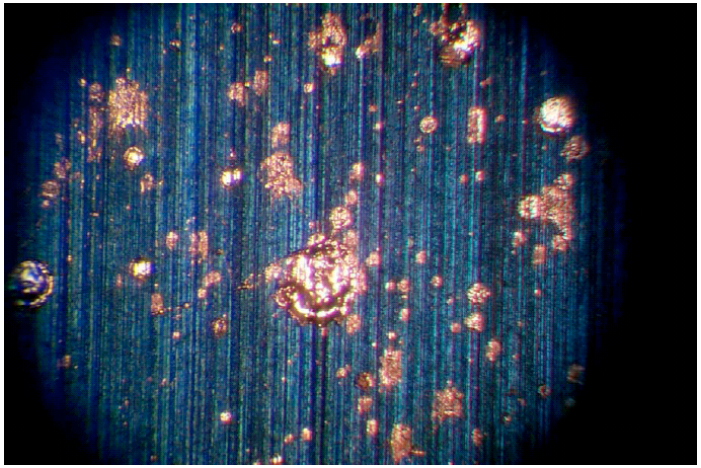

Y. Torun

201 MHz Prototype Cavity

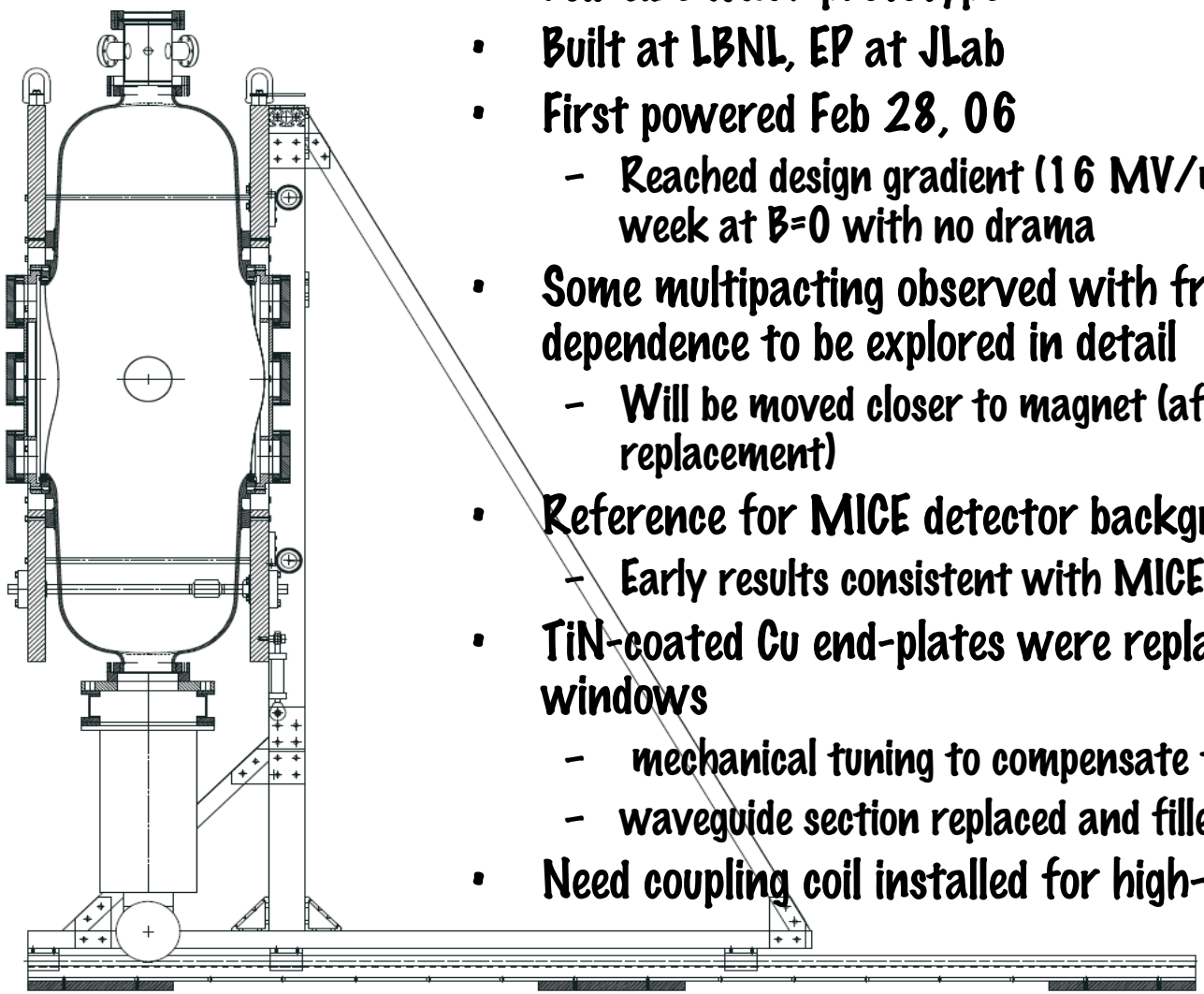

- Full-size MICE prototype
- Built at LBNL, EP at JLab
- First powered Feb 28, 06
  - Reached design gradient (16 MV/m @ 4.2MW) within a week at B=0 with no drama
- Some multipacting observed with fringe field, B-field dependence to be explored in detail
  - Will be moved closer to magnet (after cryopump replacement)
- Reference for MICE detector backgrounds
  - Early results consistent with MICE assumptions
- TiN-coated Cu end-plates were replaced with thin Be windows
  - mechanical tuning to compensate for frequency shift
  - waveguide section replaced and filled with SF6
- Need coupling coil installed for high-magnetic-field test

Y. Torun

201 MHz Prototype Cavity

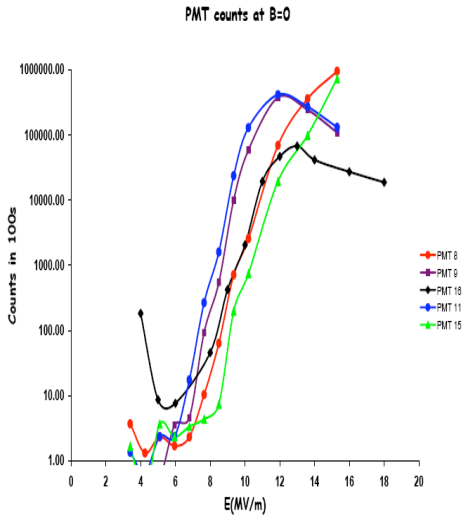

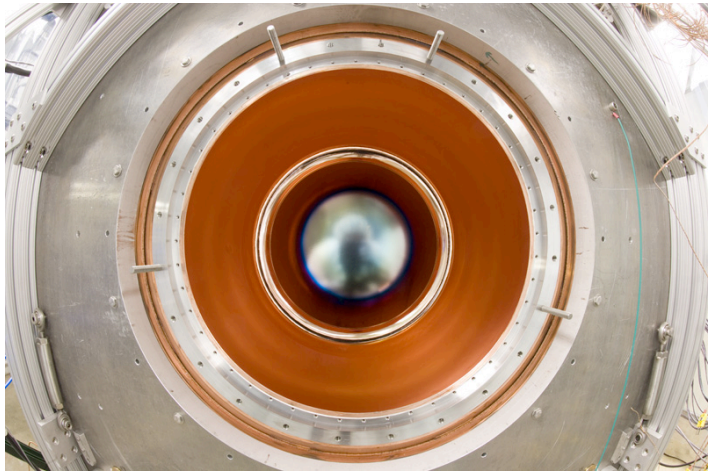

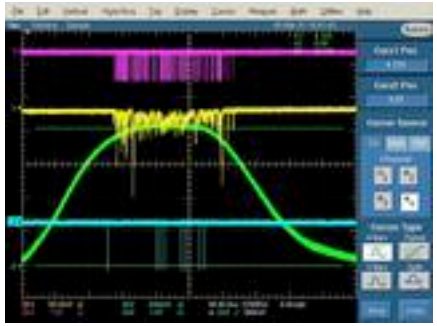

- Ready to operate with curved Be windows
  - No visible surface damage
- RF power availability limited
  - Parasitic operation on Linac test station
- Measured backgrounds in a MICE-TOF-like counter
  - Rates comparable to what was assumed in MICE
  - spectra, consistent with expected 1/E shape

Y. Torun

MuCool Status

- RF R&D
  - 805MHz cavity with curved Be windows successfully tested at design gradient
    - mapped B-field dependence, test program with electrodes of different materials
  - 201MHz cavity operated at design gradient with Cu windows, also in small B-field
    - More testing to follow with Be windows
  - Coordinating with Muons Inc. to continue pressurized cavity tests
- MTA infrastructure
  - Diagnostics installed
  - Magnet cryo system operational, running off of dewars
  - Cryogenics plant partially installed
  - Beamline design complete, installation during shutdown
  - Automated RF control system being built for 805MHz
- Absorber R&D
  - New windows available, dedicated test area at Fermilab (Lab 6)
  - Another instrumented LH2 fill test when ready
  - LiH casting fixture designed and parts ordered (delivery early Fall)
- MICE support
  - Scintillating fiber trackers and readout electronics
  - Software (G4MICE)

MTA Schedule

Task Name	Duration	Start	Finish	Predecessc
805 Program	**495 days**	**Mon 7/9/07**	**Fri 5/29/09**	
CMS Pixel Tests	1 wk	Mon 7/9/07	Fri 7/13/07	
805 MHz Button Tests	4 wks	Mon 7/16/07	Fri 8/10/07	2
Hatch Work - No RF	**2 wks**	**Mon 8/13/07**	**Fri 8/24/07**	**3**
805 MHz Button Tests	8 wks	Mon 8/27/07	Fri 10/19/07	4
LH2 Absorber Tests (No RF)	**4 wks**	**Mon 10/22/07**	**Fri 11/16/07**	**5**
Hatch RF Shielding Modification	**4 wks**	**Mon 10/22/07**	**Fri 11/16/07**	**6SS**
805 HP Cell Conditioning	4 wks	Mon 11/19/07	Fri 12/14/07	7
805 MHz Button Tests	4 wks	Mon 12/17/07	Fri 1/11/08	8,29
805 HP Cell Beam Prep	2 wks	Mon 1/14/08	Fri 1/25/08	9
805 MHz Button Tests	2 wks	Mon 1/28/08	Fri 2/8/08	10
805 HP Cell Beam Tests	4 wks	Mon 2/11/08	Fri 3/7/08	11
805 MHz Button Tests	4 wks	Mon 3/10/08	Fri 4/4/08	12
MTA Configuration Change	**16 wks**	**Mon 4/7/08**	**Fri 7/25/08**	**13**
805 HP Cell Beam Tests	4 wks	Mon 7/28/08	Fri 8/22/08	14
805 MHz Button Tests	4 wks	Mon 8/25/08	Fri 9/19/08	15
805 HP Cell Beam Tests	4 wks	Mon 9/22/08	Fri 10/17/08	16
805 MHz Button Tests	4 wks	Mon 10/20/08	Fri 11/14/08	17
805 HP Cell Beam Tests	6 wks	Mon 11/17/08	Fri 12/26/08	18
Installation of MICE Coupling Coil	**6 wks**	**Mon 12/29/08**	**Fri 2/6/09**	**19**
805 MHz Button Tests	4 wks	Mon 2/9/09	Fri 3/6/09	20
805 Test Cell II B field Tests	6 wks	Mon 3/9/09	Fri 4/17/09	21
805 HP Cell II Tests	6 wks	Mon 4/20/09	Fri 5/29/09	22
201 Program	**475 days**	**Mon 7/9/07**	**Fri 5/1/09**	
201 Cavity Conditioning with Be windows	2 wks	Mon 7/16/07	Fri 7/27/07	2
201 Cavity B field Study	2 wks	Mon 7/30/07	Fri 8/10/07	25
201 Vacuum Upgrade	12 wks	Mon 7/9/07	Fri 9/28/07	
Move 201 Cavity	2 days	Mon 8/13/07	Tue 8/14/07	3
201 Cavity B field Study	3 wks	Mon 11/19/07	Fri 12/7/07	6,7
201 Cavity High B field studies	12 wks	Mon 2/9/09	Fri 5/1/09	20

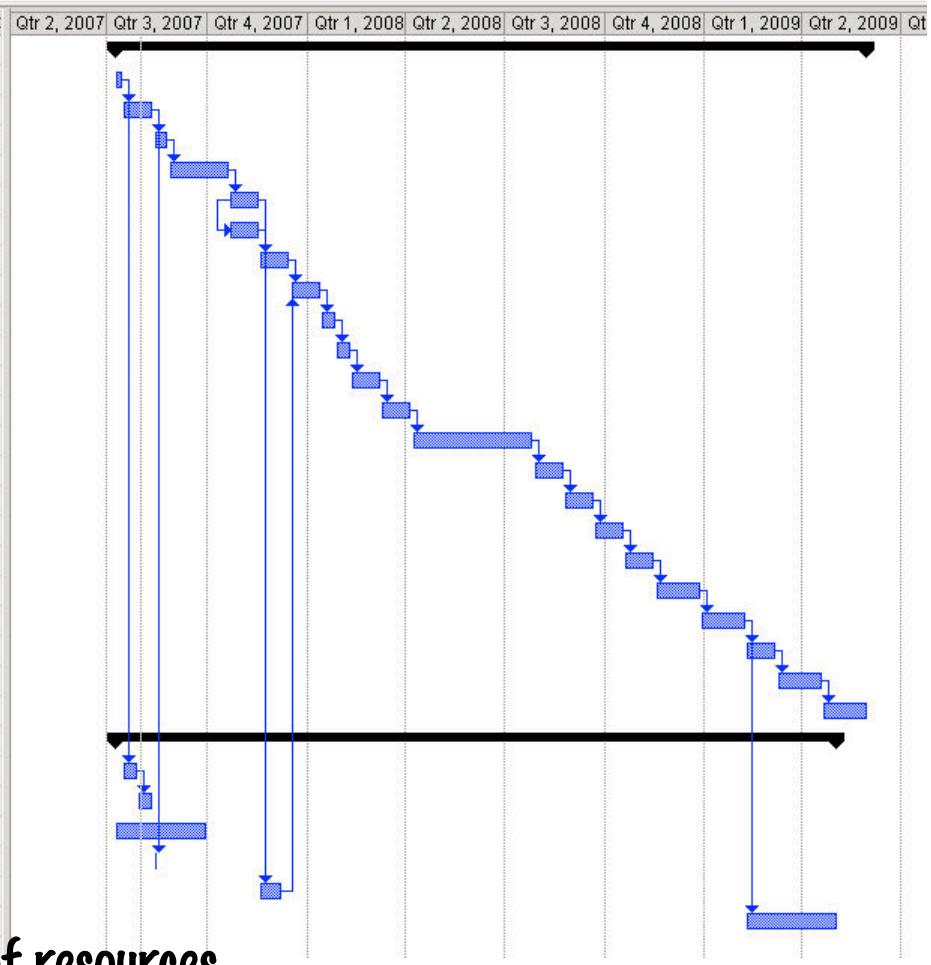

- Installation subject to availability of resources
- R&D program strongly coupled to Linac operations
  - Will review at joint NFMCC-MCTF-MuonsInc vacuum and high-pressure MTA RF Workshop: Aug 22 @ FNAL

Y. Torun