Context and Current ILC Program at Fermilab

Robert Kephart

Outline

- Context: Changing Landscape of HEP
- Fermilab ILC Goals
- FNAL's Role in the GDE
- Hosting the ILC at FNAL
- FNAL ILC/SCRF organization
- Funding
- R&D Program
  - Main Linac design
  - SCRF Cavity & Cryomodule R&D
  - SCRF infrastructure
  - ILC test facilities
  - Industrialization
  - ILC Civil and Site Development
  - Outreach and State of Illinois
- Conclusion

Context

- Why do I even have to talk about the "context" in which we seek the advice of the AAC on the FNAL ILC program?
- Answer: Because…
  - U.S. HEP will undergo dramatic changes in the next few years…
  - ILC is unlike any previous accelerator effort at FNAL
  - The situation is complicated…
  - It is <u>not</u> business as usual…
- It is important for the committee to understand:
  - The changes that will take place
  - How the ILC is currently organized…
  - FNAL's role in the ILC effort
  - The constraints…
- This is crucial if you are to provide us with advice that is actionable

Changing Landscape

- The SLAC b-factory will cease operations end of 2008…
  - still involved in ILC, but
  - as a laboratory, SLAC will focus on BES and astrophysics
- LHC will start 2007-08, energy frontier moves to Europe
- For the next ~3 years FNAL must deliver on Run II
  - Many accel. physicists and key staff must remain engaged
  - But … Tevatron operations will cease after 2009
- U.S. HEP beyond 2010:
  - NO accelerator operating at the energy frontier
  - No replacement approved and under construction
  - The MI will continue to run for the neutrino program…this but.. this is too small to support the U.S. HEP community
  - FNAL will be the only remaining U.S. Lab dedicated to HEP
- As a result FNAL must play a special role in the stewardship of the field in the U.S. … think CERN in Europe
- Our plans revolve around the ILC, and hosting it in the U.S.

Goals of Fermilab's ILC R&D

- **The overarching goal of Fermilab's ILC R&D program is to establish credentials in machine design and SCRF technology such that FNAL is the preferred international site to host the ILC.**

  As part of the Global Design Effort (GDE) our goal is to help design the machine, estimate the cost, and gain international support.

- **Fermilab ILC R&D activities:**
  - **ILC Machine Design and Global systems**
  - **Development of SCRF technology & infrastructure**
  - **Conventional Facility & Site Studies for a US ILC site**
  - **Industrialization & Cost Reduction**
  - **ILC Physics, Detector Design, and Detector R&D**
  - **More at the end of this talk, and in those that follow**

Global Design Effort

- ILC is different than any previous accelerator effort at FNAL
- The effort is international…
  - FNAL is NOT "in charge" of the effort
  - Instead we "participate" in the effort via the GDE
  - FNAL is not even in charge of the U.S. ILC effort…
  - We are part of the U.S. regional team (ART Director)
- Yet, the future of U.S. HEP is crucially dependent on the approval of the ILC as a project
- FNAL's future depends critically on whether we end up as the host lab or just participate in a "distant" project
- Even if we host the project…
  - ILC will likely be run by international management
  - ie NOT FNAL as it is today
- Review … GDE organization … and FNAL's role

GDE RDR / R&D Organization

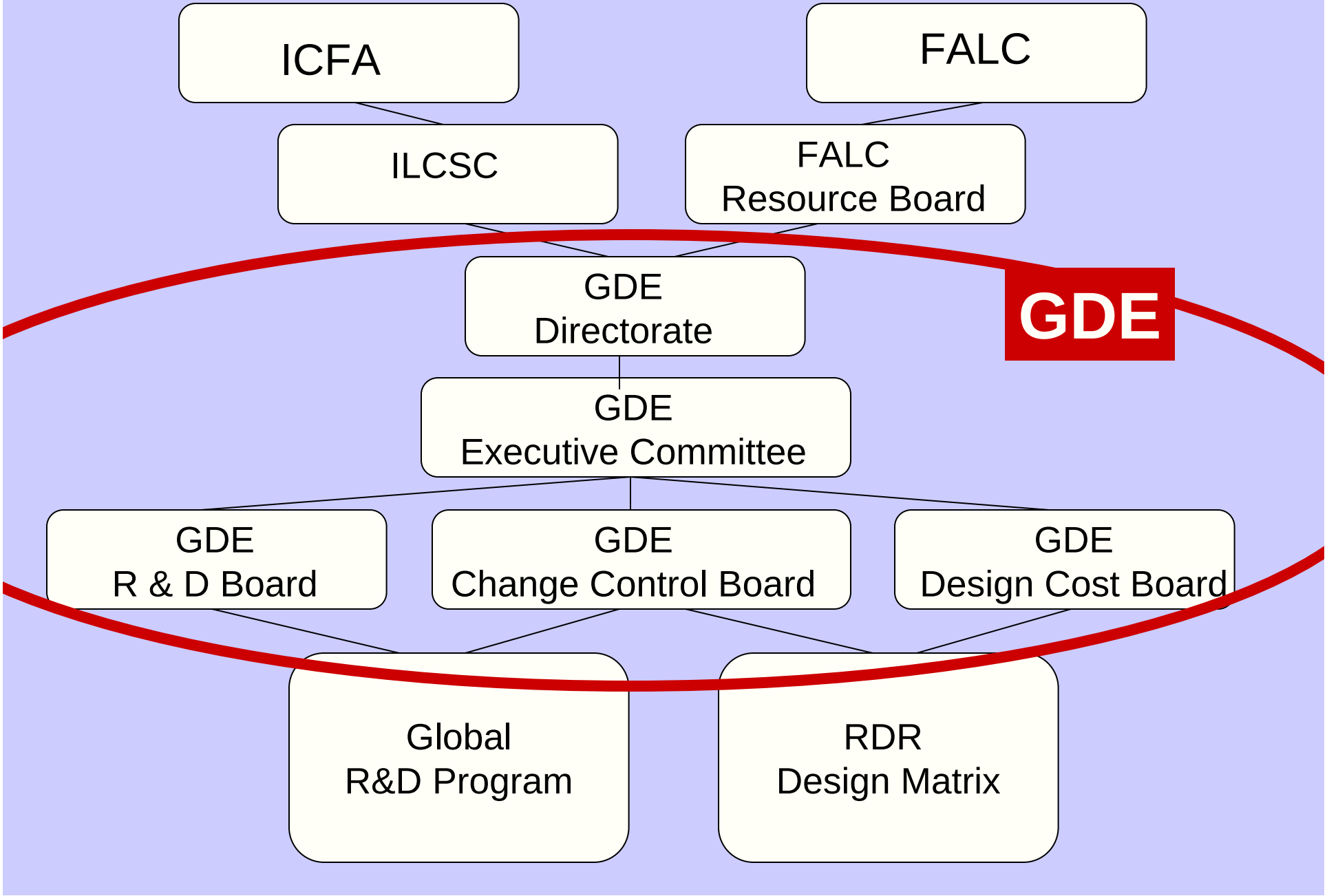

GDE Members

Chris Adolphsen, SLAC
Jean-Luc Baldy, CERN
Philip Bambade, LAL, Orsay
Barry Barish, Caltech
Wilhelm Bialowons, DESY
Grahame Blair, Royal Holloway
Jim Brau, University of Oregon
Karsten Buesser, DESY
Elizabeth Clements, Fermilab
Michael Danilov, ITEP
Jean-Pierre Delahaye, CERN,
Gerald Dugan, Cornell University
Atsushi Enomoto, KEK
Brian Foster, Oxford University
Warren Funk, JLAB
Jie Gao, IHEP
Terry Garvey, LAL-IN2P3
Hitoshi Hayano, KEK
Tom Himel, SLAC
Bob Kephart, Fermilab
Eun San Kim, Pohang Acc Lab
Hyoung Suk Kim, Kyungpook Nat'l Univ
Shane Koscielniak, TRIUMF
Vic Kuchler, Fermilab
Lutz Lilje, DESY
Tom Markiewicz, SLAC
David Miller, Univ College of London
Shekhar Mishra, Fermilab
Youhei Morita, KEK
Olivier Napoly, CEA-Saclay
Hasan Padamsee, Cornell University
Carlo Pagani, DESY
Nan Phinney, SLAC
Dieter Proch, DESY

Pantaleo Raimondi, INFN
Tor Raubenheimer, SLAC
Francois Richard, LAL-IN2P3
Perrine Royole-Degieux, GDE/LAL
Kenji Saito, KEK
Daniel Schulte, CERN
Tetsuo Shidara, KEK
Sasha Skrinsky, Budker Institute
Fumihiko Takasaki, KEK
Laurent Jean Tavian, CERN
Nobu Toge, KEK
Nick Walker, DESY
Andy Wolski, LBL
Hitoshi Yamamoto, Tohoku Univ
Kaoru Yokoya, KEK
Peter Garbincius (FNAL)
Marc Ross (FNAL)
Bill Willis (Columbia)
Andre Seryi (SLAC)
John Sheppard (SLAC)
Ewan Paterson (SLAC)
Maseo Kuriki (KEK)
Kiyoshi Kubo (KEK)
Nobuhiro Terunuma (KEK)
Norihito Ohuchi (KEK)
Susanna Guiducci (INFN)
Deepa Angal-Kalinin (CCLRC)
Maura Barone (FNAL)
Jin-hyuk Choi (Pohang)
Max Hronek (FNAL)
Alex Mueller (Orsay)
Mitsuaki Nozaki (Kobe)
Grigori Shirkov (JINR)
Young-uk Sohn (Pohang)
Barbar Warmbein (DESY)

69 total, 8 FNAL (4 physicists)

GDE Structure and Organization

- **Executive Committee for Baseline Configuration**
  - **GDE Director**
    - **Barish**
  - **Regional Directors**
    - **Dugan – Americas (Harrison)**
    - **Foster – Europe**
    - **Takasaki – Asia**
  - **Accelerator Leaders**
    - **Yokoya - Asia**
    - **Raubenheimer - Americas**
    - **Walker - Europe**

GDE Executive Committee

- **Responsible for decisions and documentation for the Baseline Configuration Document (BCD)**

GDE Organizational Evolution for RDR

- **Selected additions to the GDE following the BCD completion having needed skills in design, engineering, costing, etc**
- **Change Control Board**
  - **The baseline will be put under configuration control and a Board with a single chair will be created with needed expertise.**
- **Design / Cost Board**
  - **A GDE Board with single chair will be established to coordinate the reference design effort, including coordinating the overall model for implementing the baseline ILC, coordinating the design tasks, costing, etc.**
- **R&D Board**
  - **A GDE Board will be created to evaluate, prioritize and coordinate the R&D program in support of the baseline and alternatives with a single chair**

Fermilab's Role in the GDE

- GDE goal = complete the Reference Design Report (RDR) and a cost estimate by Feb 2007➔ established RDR organization
- Design & Cost Board (coordinates RDR and cost estimate)
  - 9 members (3/region) + Chairman
  - P Garbincius (FNAL) = chair, R. Kephart (FNAL) member
- Change Control Board (ILC baseline configuration control)
  - 9 member board (3/region), N Toge = Chairman
  - S. Mishra (FNAL) is one of 3 U.S. Members
- Research Board (coordinates world wide R&D effort)
  - 9 member board, Bill Willis= Chairman
  - M. Ross (FNAL) is one of U.S. Members
- ILC Machine "Area" Leaders (typically 3 Ldrs 1/region)
  - Civil and Site: Vic Kuchler (FNAL) = Americas Ldr
  - Main Linac Design: N. Solyak (FNAL) = 1 of 2 Americas Ldrs
  - Cryomodule: H. Carter (FNAL) = Americas Ldr
  - Cryogenics system: T. Peterson (FNAL) = Americas Ldr
  - Magnet systems: J. Tompkins (FNAL) = Americas Ldr
  - Communications: E. Clements (FNAL) = Americas Ldr
- FNAL is playing a major role in the global ILC effort
- However, it would be hard to argue that we are the leaders…

ILC Cost Estimate

RDR matrix

Area Systems

e- source	e+ source	Damping Rings	RTML	Main Linac	BDS
	Kiriki	Gao	ES Kim	Hayano	Yamamoto
		Guiduchi		Lilje	Angal-Kalinin
Brachmann	Sheppard	Wolski	Tenchoeum	Adolphsen	Seryi
Logachev		Zisman		Sotyak	

Technical Systems

Vacuum systems	Suetsugu	Michelato	Noonan
Magnet systems	Sugahara	Bondachuk	Thomkins
Cryomodule	Ohuchi	Pagani	Carter
Cavity Package	Saito	Proch	Mammosser
RF Power	Fukuda		Larsen
Instrumentation	Urakawa	Burrows	Ross
Dumps/Collimators	Ban	Densham	Markiewicz
Acc. Physics	Kubo	Schulte	

Global Systems

Ops. & Avail.	Teranuma	Elsen	Himel
Controls	Michizono	Simrock	Carwardine
Cryogenics	Hosoyama	Tavian	Peterson
CF&S	Enomoto	Baldy	Kuchler
Installation	Shidara	Bialwons	Asiri

Cost supplied (rolled-up) to Area Systems

FNAL personnel in red, many more one layer down

RDR matrix

Area Systems

e- source	e+ source	Damping Rings	RTML	Main Linac	BDS
	Kiriki	Gao	ESSim	Hayano	Yamamoto
		Guiducci		Lilje	Angal-Kalinin
Brachmann	Sheppard	Wolski	Tenenbaum	Adolphsen	Seryi
Logachev		Zisman		Solyak	

Technical Systems

Vacuum systems	Suetsugu	Michelato	Noonan
Magnet systems	Sugahara	Bondachuk	Thomkins
Cryomodule	Ohuchi	Pagani	Carter
Cavity Package	Saito	Proch	Mammosser
RF Power	Fukuda		Larsen
Instrumentation	Urakawa	Burrows	Ross
Dumps/Collimators	Ban	Densham	Markiewicz
Acc. Physics	Kubo	Schulte	

Global Systems

Ops. & Avail.	Teranuma	Elsen	Himel
Controls	Michizono	Simrock	Carwardine
Cryogenics	Hosoyama	Tavian	Peterson
CF&S	Enomoto	Baldy	Kuchler
Installation	Shidara	Bialwons	Asiri

Bialowons
Garbincius
Shidara

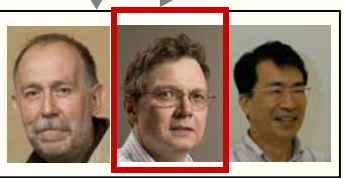

Regional Cost Engineers responsible for complete budget book

FNAL personnel are playing a big role in the RDR cost estimate

Plans until Beijing (Feb. '07)

Then what happens?

Beyond the RDR

- **Spring Reviews:**
  - Technical review: Goal is to validate the RDR design
  - RDR Cost reviews: Goal is to validate the cost via some international process yet to be defined
- **Technical Design phase (3-5 years)**
  - Goal is to produce an engineering design report (EDR) for the machine then work packages ready to send out for bid
  - R&D program continues in parallel
  - Industrialization efforts ramp up
  - Complication: Site specific designs are required, but depends upon site selection (no mechanism or timeline yet for this)
- **Organization for RDR will not work for EDR**
  - More centralized design group (ie serious engineering)
  - Project manager and management tools
  - FNAL is likely to play a large role (see Marc's talk)
- **Working to understand what is required for FNAL to host !**

The GDE Plan and Schedule

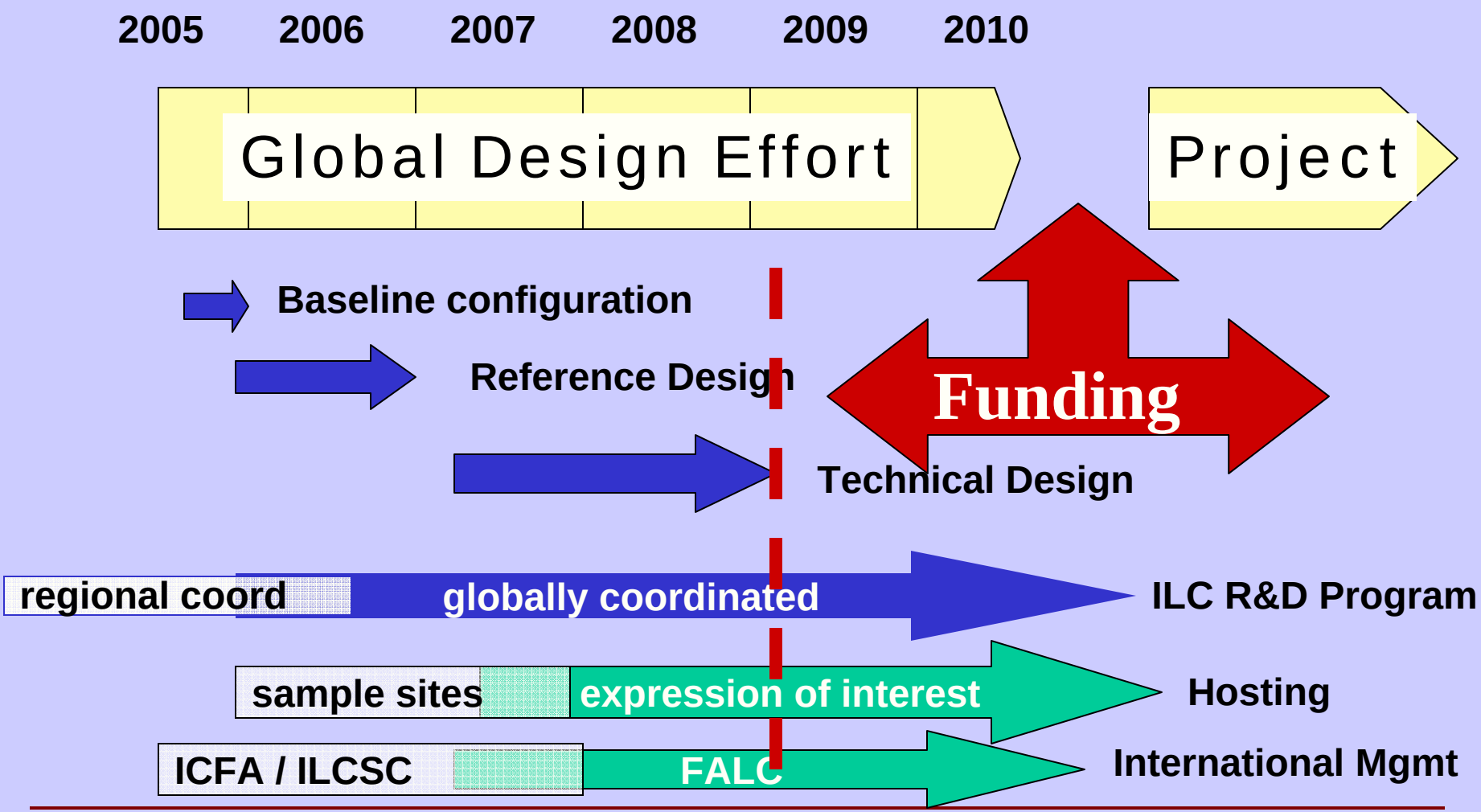

For ANY Region to host the ILC

- Minimum information for ANY Region to act as host:
- Technical Viability
  - There must exist machine and detector designs that have a high likelihood of achieving the desired physics performance
  - The technical risk of the project is acceptable
  - Credible plan & schedule for building the machine.
- Financial Viability
  - Credible international cost estimate for the RDR machine
  - Clear explanations of how the costing was done
  - Credible scheme for how such a machine could be realized using global resources (so that host region costs known)
- International Management plan
  - Long term commitments by the international partners
- GDE is working on these now… at least the first two

For FNAL to host the ILC

- **Additional requirements:**
  - **A U.S. site specific machine and civil eng. design (e.g. @ FNAL)**
  - **Demonstration to the U.S. HEP funding agencies that the ILC technology is ready for a multi-billion dollar project**
  - **Evidence that U.S. Industry can provide the required U.S. technical components and supports the cost estimate**
  - **A credible plan & schedule using plausible U.S. resources and "in kind contributions" from outside the U.S.**
  - **A cost for the U.S. share of the ILC machine and detector in sufficient detail to convince the DOE Office of Science, OSTP, and OMB that the U.S. costs are known**
  - **An international management plan acceptable to DOE <u>and</u> the international community**
- **Producing this information is an important part of the Engineering Design Report (EDR) phase of ILC**
- **Bid-to-host probably requires:**
  - **a "presidential initiative"**
  - **State of Illinois buy-in and financial contributions**

FNAL ILC/SCRF organization

- For the next few years FNAL faces the difficult challenge of delivering on the existing program (especially Run II) while building the ILC effort
  - The lab also recognized that SCRF is an "enabling" technology (think SC magnets) that will be useful any of a variety of future projects in addition to ILC.
  - E.g. intense P source, neutrino factory, muon collider, light source, etc
- We also recognize that success on the ILC requires the full resources of the laboratory
  - Technical, business, HR, FESS, etc.
  - Hence ILC is not organized as a project in a division
- In FY06 Pier chose to organize ILC and all SCRF efforts by creating an office in the Directorate
- Full budget authority, matrix management org

FNAL ILC/SCRF organization

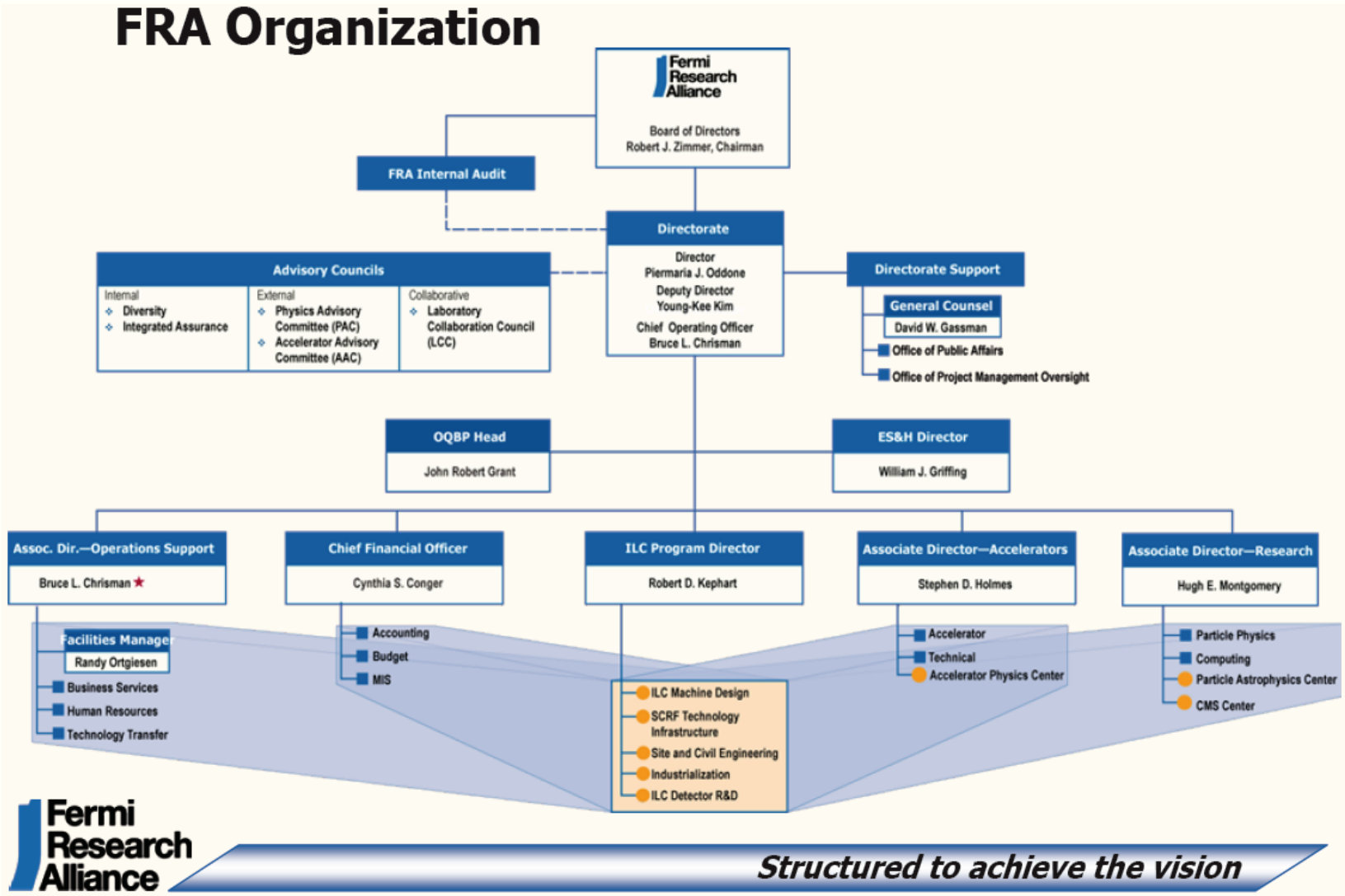

FNAL ILC/SCRF organization

- Leaders in the Divisions and Sections
  - AD Sergei Nagaitsev (also my deputy)
  - TD Shekhar Mishra (other deputy)
  - PPD Marcel DeMarteau
  - CD Patti McBride
  - FESS Vic Kuchler
- Detailed organization chart exists
  - Task Leaders responsible for deliverables
  - Workers may come from more than one Division
  - SWF in Division (labor agreement), M&S in Directorate
- Evolving… eg new strong additions (e.g. Marc Ross)
- Full WBS (Project 18 in FNAL financial system)
- Technical and Financial tracking in place

GDE directed ILC R&D

- The vision of the GDE is that the ILC R&D program be proposal driven, prioritized, and optimized across the globe
  - U.S. DOE has asked the GDE Americas Regional Team (ART) Director for R&D funding recommendations
  - Some influence in U.K… less in Europe and Japan
- In the U.S. in FY06 and FY07 U.S. labs and universities made proposals for ILC R&D efforts
- The ART Director (Dugan now, soon Harrison)
  - Received guidance from OHEP on available funding for U.S. ILC R&D (funds in the ILC B&R code)
  - GDE research board assigned relative priority to tasks
  - ART Director consulted with RDB and EC then recommended funding by work package to the DOE

FY06 Funding

- **FY06 national funding for ILC R&D was $ 30 M**
  - **GDE recommended ILC R&D funding to FNAL was $ 13 m**
  - **FNAL added $ 19 M in core funds to develop SCRF capability and infrastructure (includes $3 M 3rd harmonic collaboration with DESY)**
  - **FNAL's total FY06 ILC/SCRF effort was $ 32 M**
  - **Numbers include salaries and overhead, $ 10.9 M M&S**
- **In FY06 the FNAL workforce ramped from 60 FTE at the beginning of the year to 150 FTE by the end of the year**
  - **ie, a major increase in emphasis and effort**

FY07 Funding

- GDE ART FY07 planning assumed nation funding at $ 60 M
- ~ $ 105 M proposed, about half was FNAL's $ 56 M request
- FY07 GDE recommendation to DOE was to support 68 FTE and $ 9.8 M in M&S at FNAL… $22.7 M total from ILC funds
  - A big increase, but far from supporting the existing workforce
  - Recommended additional support of staff & infrastructure from other funds, but no OHEP plan for these funds (ie depends on availability of lab's core funds)
- FY07 national ILC funding is uncertain
  - Presidents budget recommends $ 60 M (House also)
  - Senate recommended $ 45 M, no bill passed
  - Awaiting Senate passage of the bill, resolution in conference
  - meanwhile… THE ELECTION… Democrats win
- Currently, no budget ➔ continuing resolution…
  - ILC/SCRF R&D effort is on "life support" until this is resolved
  - Labor capped at 150 FTE in FY07 (could grow a lot)
  - Unclear how long this will last…beyond Feb… ie 07 is a mess
- Still hope to mount an effort ~ 10 M larger than FY06

FY08-09 Funding

- Hope is that national funding for ILC R&D will increase to $ 120 M in FY08 (large fraction of U.S. HEP…$ 775 M in 06)
- Methodology for planning 08-09 budgets has changed
  - Instead of lab proposals, national efforts are being assembled by GDE appointed Level 2 WBS managers (Shekhar's talk)
  - Increases the chance that the national program is coordinated… but …stewardship of the lab ?
  - ILC funding will be a large part of U.S. HEP➔ the GDE and OHEP must work closely to plan the entire HEP program (This did not happen in 07)
- FNAL is viewed as a likely source for engineering, design, project management labor for EDR in U.S.
  - We are enthusiastic about doing this
  - However, we are just trying to understand the scope of this effort, what kind of labor is required, funding etc. (Marc's talk)

FNAL ILC/SCRF R&D program

Fermilab

FNAL has built a strong R&D and Design effort:

- **SCRF cavity development (Edwards,Mishra, Rowe, Foley, Boffo, Antoine)**
- **Cryomodule and component design (Carter, Mitchell)**
- **Conventional Facilities design (Kuchler)**
- **Cryogenic system design (Peterson)**
- **Magnet systems (warm + linac cold) design (Thompkins)**
- **Controls, Instr. and LLRF design (McBride, Wendt/Ross, Chase)**
- **Linac Accelerator design (Solyak)**
- **ILC test facilities (Nagaitsev,Liebfritz,Carcagno,Ginsberg,Hocker,Olis)**
- **Tunnel layout and Installation (Liebfritz)**
- **Cost and Schedule estimates (Garbincius, Kephart, Stanek)**

- **We also have developed strong collaborations with: ANL, KEK, DESY, INFN, Cornell, TJNL, MSU, SLAC, Penn, NIU, NHML, etc**
- **Working on more… China, India, Korea…LANL, U of I, etc**

ILC/SCRF R&D Overview

- Fermilab has focused its R&D efforts on the ILC Main Linacs.
- Main Linac activities:
  - Accelerator physics design and simulation
  - Demonstrate feasibility of all Main Linac technical components
  - Engineering design of ML technical systems
  - Estimates of the ML cost & methods for cost reduction
  - U.S. Industrialization of high volume ML components
- Other R&D (smaller efforts)
  - Design studies of the ILC Damping Rings
  - Working on the Machine-Detector Interface
  - Physics studies & Detector R&D
- Civil and Site Development activities:
  - Civil engineering of machine enclosures
  - With the GDE, develop a matrix for comparing possible ILC sites
  - Study U.S. sites on or near the Fermilab site

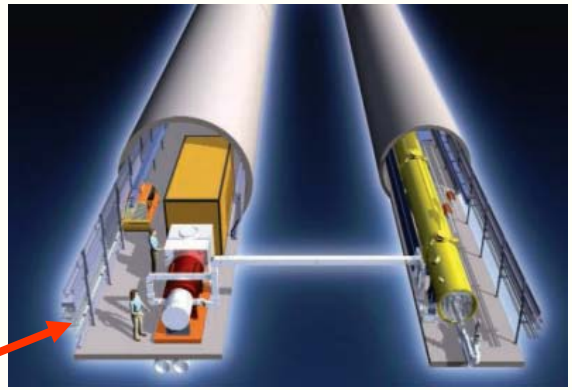

SCRF Cavity R&D

- Our goal is to rapidly advance the intellectual understanding of SCRF surface physics and establish process controls to reliably achieve high gradient (35 MV/M) SCRF cavity operation

- Approach: Establish a "tight loop" processing and test infrastructure in the U.S.
- Tight loop elements:
  - Cavity fabrication capability (vendors)
  - BCP & Electro-polish facilities
  - High purity water and High pressure rinse
  - Vertical test facilities
  - SCRF experts & materials program to interpret results
- SCRF materials program =FNAL,UW,NW,Cornell,TJNL,MSU, etc

Cavity Fabrication

- **FY05 FNAL ordered 4 cavities** (ACCEL)
  - **ACCEL cavities have arrived. Process and vertical test is ongoing**
- **FY06 FNAL ordered 20 cavities** (4 AES, 2 + 2 TJNL, 8 ACCEL, 6 AES)
  - **1st batch of AES cavities are being fabricated**
  - **1st effort with Roark as possible cavity vendor + (Niowave = startup)**
- **Plan an additional order of ~ 24-36 cavities in FY 07**
- **Long term goal is several "qualified" industrial vendors for cavities**

U.S. Cavity Processing & Test

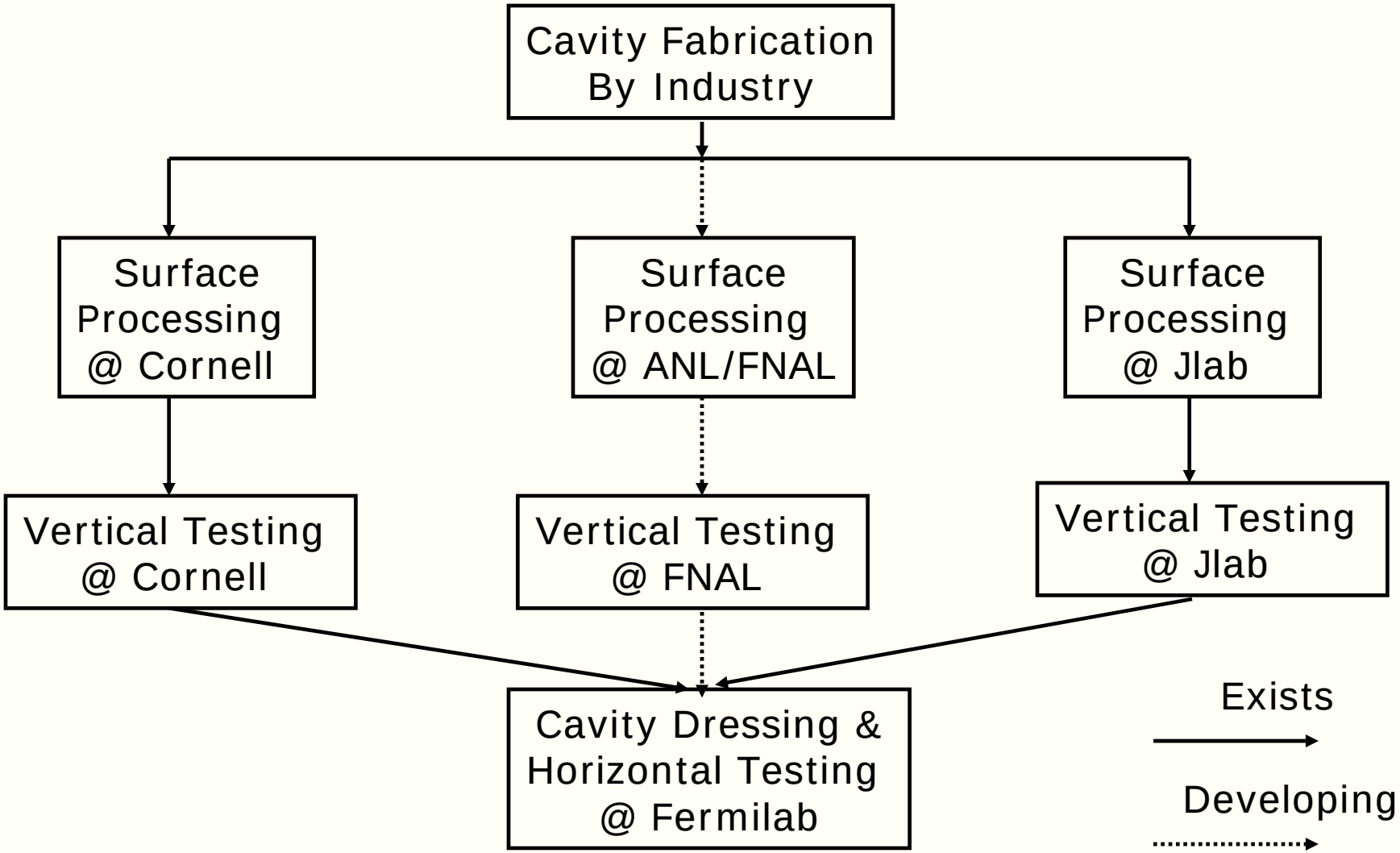

BCP & Vertical Test: Cornell

50 + 60 μm BCP + 50 μm at ACCEL + HPR

No Field emission, Q > 0.4×10^{10}

No Heat treatment at 800 C.

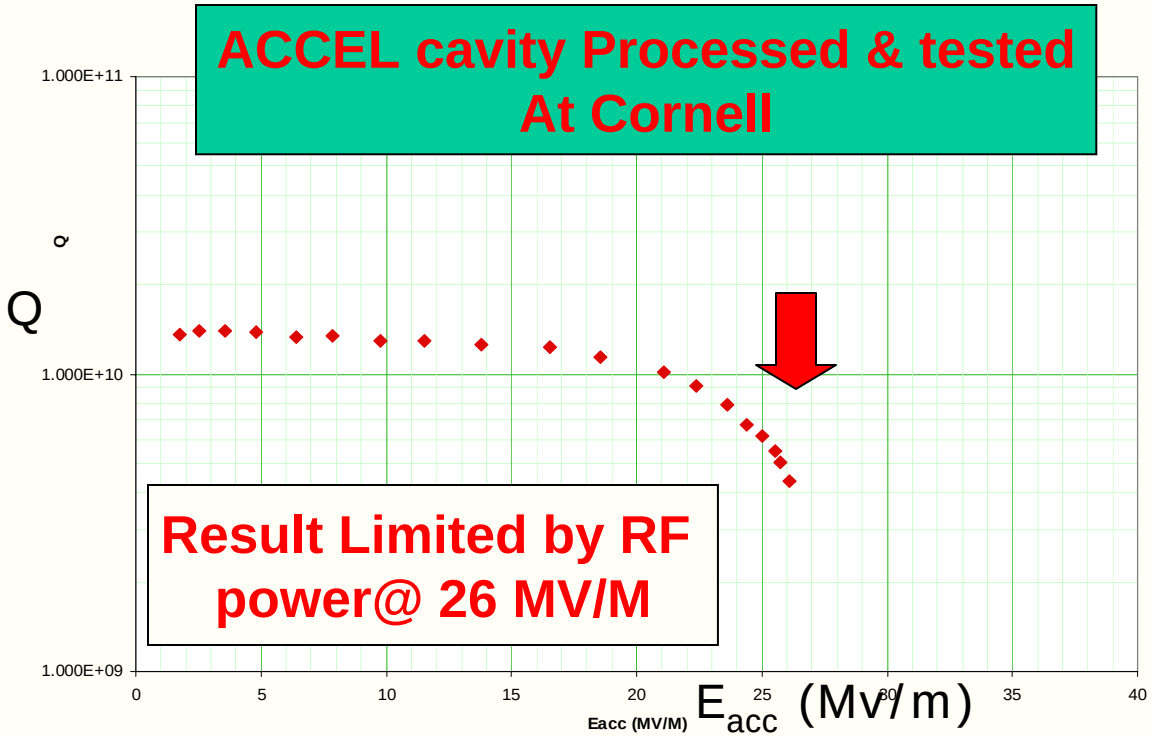

Vertical EP Results on 1.3 GHz cavities are expected soon.

1st EP and test of cavities in U.S.

- Jlab has commissioned the EP for 1.3 GHz cavities.
- 1st vertical test of FNAL cavity (from ACCEL) Electro-polished at TJNL looks encouraging

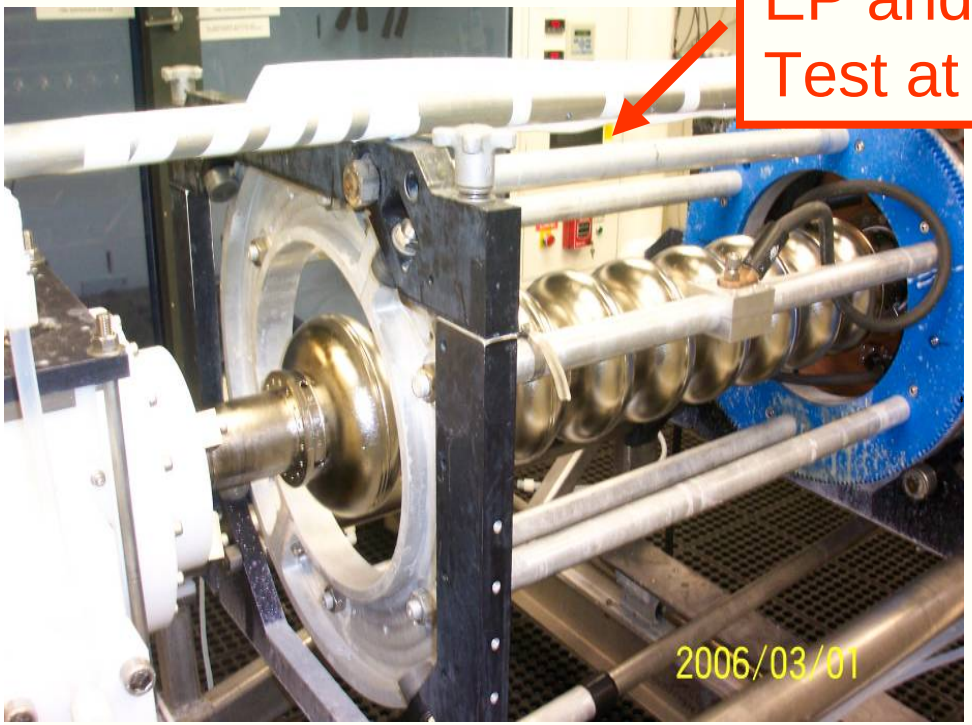

EP and Vert Test at TJNL

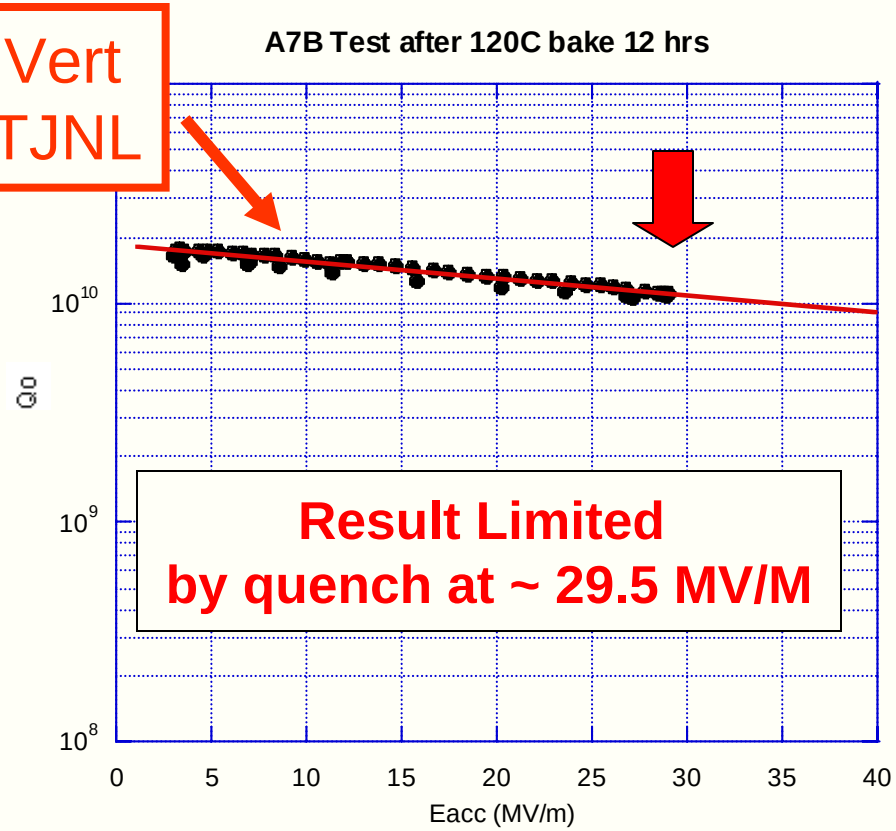

Vertical Test at Fermilab

- Building a VTS system in IB1
- Takes advantage of existing 1500 W @ 4 K refrigerator
- Already capable of 60 W at 1.8 K, additional pumps and He gas storage ➔ even more capacity
- RF & controls developed in collaboration with DESY/Jlab.
- Civil work finished Aug. 06
- One of many places where we are trying to leverage existing infrastructure for ILC

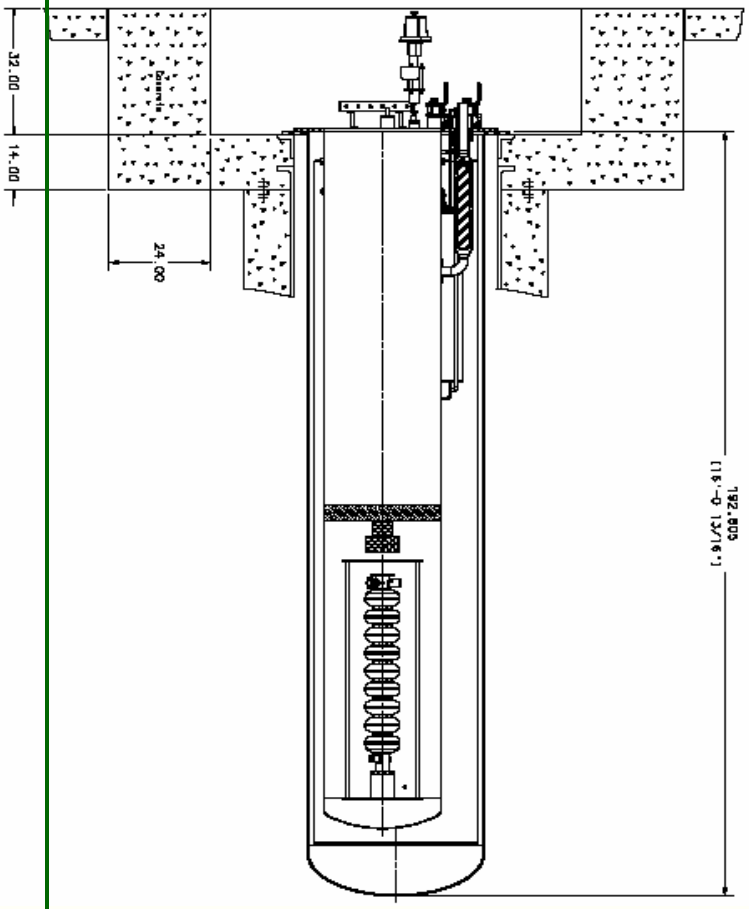

VTS status

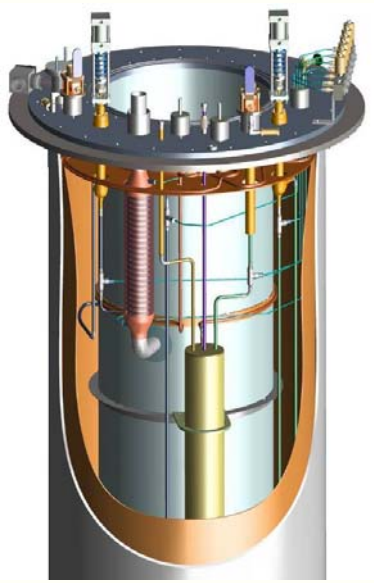

- Cryostat ordered
- Shielding ordered
- Top plate design in progress
- Cryogenic modifications in spring
- Operational by summer 07
- Space for 2 more pits in the future

ANL/FNAL BCP-EP facility

- A new facility for BCP and Electropolish is being built as joint project of FNAL and ANL
  - Initial safety approval for acid use in part of facility
  - Contract to Niowave (MSU spinoff) for new HPR design
- New ILC cavity EP facility under design, operational 07

Horizontal Test Cryostat HTC)

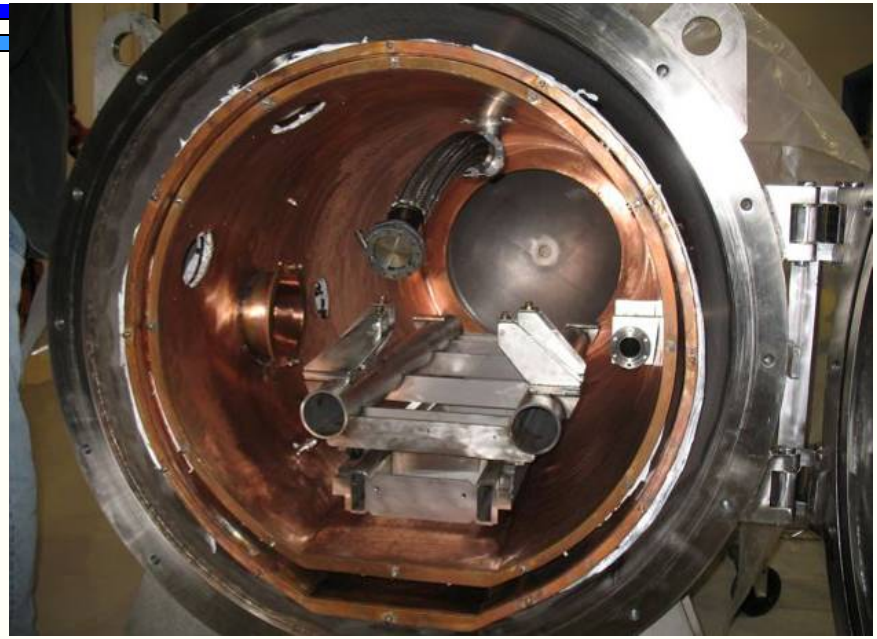

- **Designed @ FNAL, Built by PHPK (Columbus, OH)**
- **Accepts one fully dressed 9 cell cavity**
  - **Dressed ➔He vessel, main coupler, tuner, etc**
- **Operates at 1.8 K; Ready ~ March 07 in MDB**
- **Commission with Dud cavity (from DESY) first then…**
- **Six 3.9 GHz cavities for DESY, then 1.3 GHz ILC cavities**

The road to HTS: Capture Cavity 2

- **Tested 9-cell TESLA cavity from DESY**
  - **To be used as capture cavity for ILCTA_NM**
  - **Used to shake down MDB infrastructure (cryo, RF system, interlocks, controls, cave…)**
- **1st operation in Jan. '06**
  - **Success! ; see T. Koeth's 26-APR-2006 talk**

- **800 μs "flat-top" @ ~31 MV/m**
- **Q_0 1.5 x 10^{10}**
- **stable LLRF feedback control**

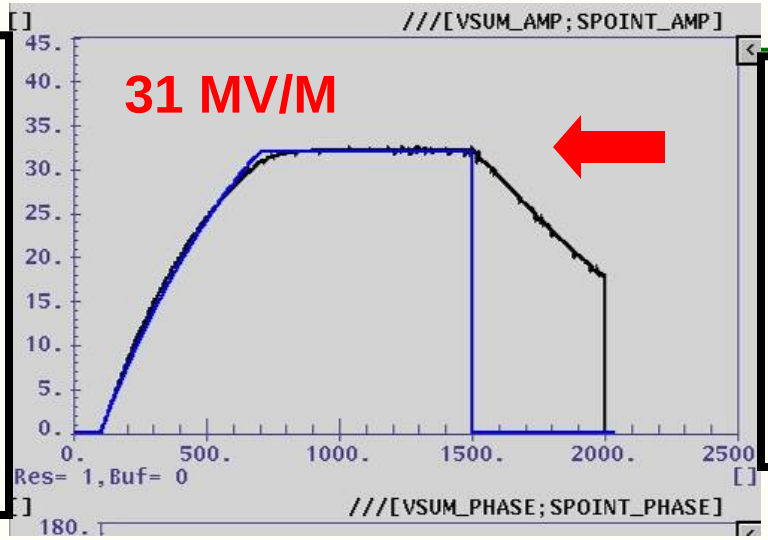

- **Demonstrates that dressed cavities can be shipped around the world**

MDB Cavity Test Infrastructure

RF Power for HTS

Cryogenics for HTS ready at 2 K

MBD Vacuum pumps ~100w at 1.8K

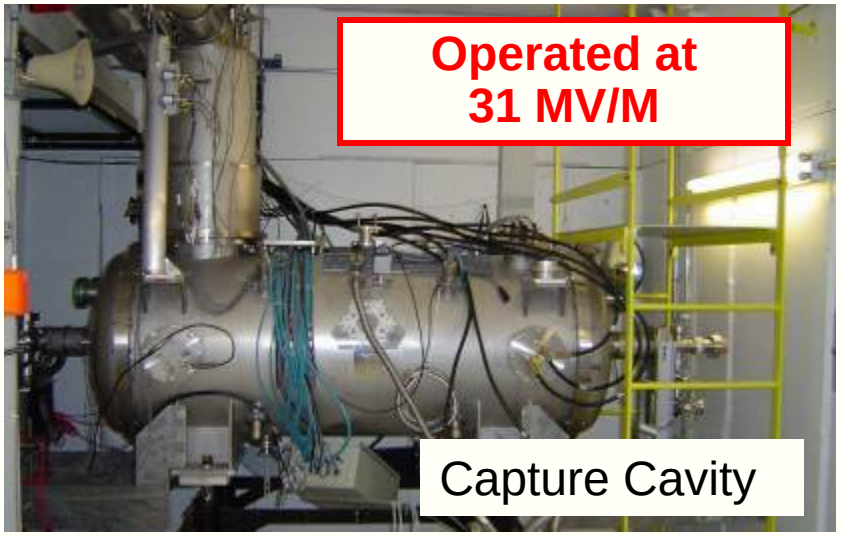

Capture Cavity

DESY Collaboration

- Fermilab and DESY have collaborated for many years
- As members of the TESLA collaboration:
  - FNAL & DESY collaborated to build both TTF & the Fermilab NICADD Photo-Injector Lab (FNPL) at A0
  - Currently FNAL is building a 3.9 GHz 3rd Harmonic module for the TTF @ DESY (doubles light output of the VUV-FEL)
- Status of the 3.9 GHz effort
  - 3.9 GHz cryomodule design is complete, parts ordered
  - Uses four 9 cell 3.9 GHz cavities (>3 of 6 total are now welded)
  - BCP processing at TJNL and ANL
  - Vertical test @ A0, HTS in MDB
  - Delayed due to difficulty with HOM couplers (broken in VT)
  - 3rd cavity achieved gradient… but problem not understood
  - remove HOM's? not needed for FLASH
- Pilot program for much of our ILC SCRF infrastructure (processing, vert & horizontal test, cryomodule assembly
- Goal: Deliver the 3.9 GHz module to DESY in mid 2007

DESY Collaboration

3.9 GHz

Cryomodule

&

Cavity string

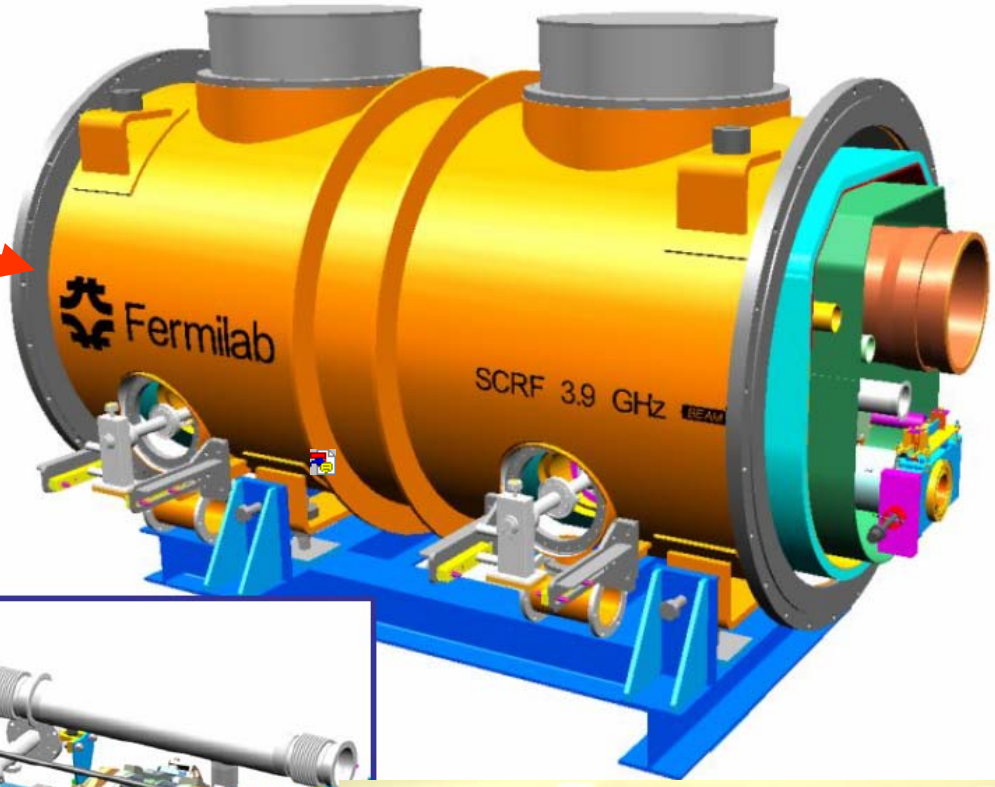

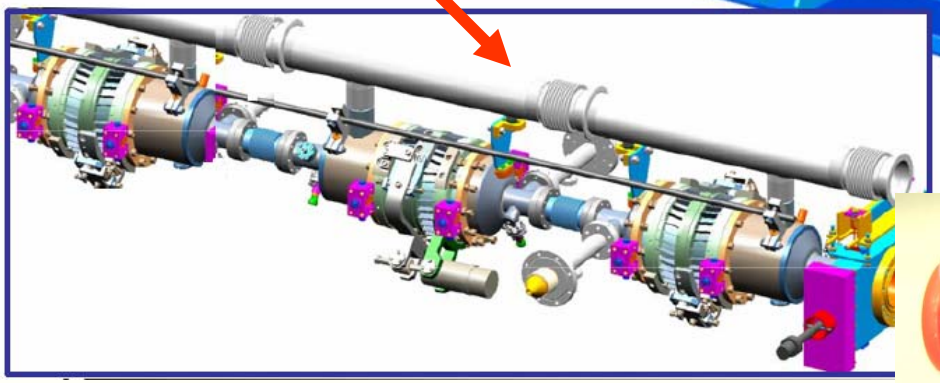

9 cell 3.9 GHz cavity

DESY Collaboration

- DESY and INFN will supply Fermilab with all the parts for one 1.3 GHz (type 3) TESLA cryomodule
  - DESY will send us 8 TESLA 9 cell cavities
  - Vertically tested, dressed, & horizontally tested @DESY
  - DESY will also supply cold mass parts
  - Expect all parts at FNAL early in FY07
  - Many details to work out
- Will be 1st ILC type cryomodule built in U.S.
- Plan to assemble and test in 2007
- Cavities currently being processed in U.S. (ie those mentioned earlier) will be installed in a second type III TTF cryomodule in 2008

ILC Cryomodule Design

- TTF cryomodules (type III) need to evolve for ILC
- Collaboration with INFN, DESY, KEK and CERN on design
- Goal: build an improved cryomodule at Fermilab by FY09.
  - Quad and BPM package at the center
  - New Tuner and Cryogenic Distribution
  - Shorter cavity-to-cavity interconnect (Improves packing factor)
  - Simplified assembly (Cost reduction)

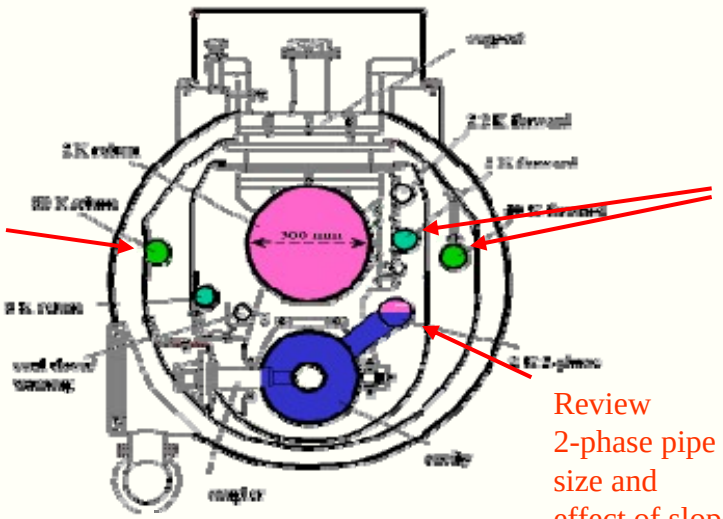

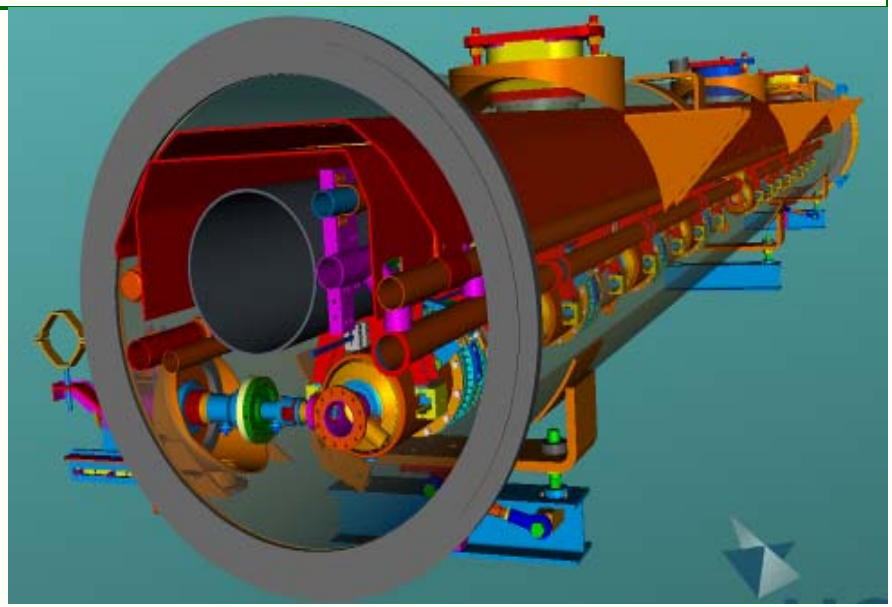

ILC Cryomodule

- 3rd-4th Cryomodules (2008-09)
  - 1st type IV cryomodules built anywhere
  - Begin industrial production of components
  - Assembly and test at Fermilab
- 5th-6th Cryomodules (2010)
  - Transfer knowledge gained to Industry for ILC cryomodule mass production (funding limited)
- 2006-2010: Develop, build & test basic building blocks of the Main Linac
  - Cryomodules (including cavities, couplers, instrumentation, etc)
  - RF systems (modulators, klystrons, LLRF)
  - Cryogenic system design
- Evaluate main linac cost and reliability issues

Cryomodule Assembly

- A Cryomodule Assembly Facility (CAF) is being built in (MP9)
- Tested bare cavities will be dressed (He vessel, coupler, etc) in smaller clean rooms prior to horizontal test
- Horizontally tested cavities assembled into a string in large clean room before final Cryo-module assembly takes place

CAF-MP9

Large Class-100 clean room

Installed & Passed certification

Parts for new Cryomodule

Assembly fixture in IB4

Plan = expand CAF into Industrial Center Bldg after LHC quads

ILCTA_NM (RF Unit Test Facility)

- Goal: 2006-2010: Develop, build & test basic building blocks of the Main Linac
- ILC RF unit
  - 3 Cryomodules, Modulators + 10 MW Klystrons
  - Waveguide and RF distribution components
  - LLRF & controls
- Evaluate main linac performance, cost, & reliability
- Overall objective is to assemble one complete ILC RF units 1st by about 2010, then a 2nd a year or so later
- Our plans include building an injector to provide electron beams for studies
- Scope of such facilities is the subject of GDE S2 task force

ILCTA_NM Progress in FY06

- Cleaning out building
  - 2500 T CCM magnet gone
  - Filled pit and sealed floor
- installing cryogenics
  - 600W@4 K Satellite
  - Heat exch + expanders in
  - LN2 dewar installed
  - piping work in progress
- Beam
  - Working on layout and gun design
  - Working with SLAC and others for RF and controls
- Goal: Power 1st cryomodule in 2007
- Progress paced by available funding
- Much more in Sergei's talk

Industrialization

- The principle goal of ILC industrialization is to establish in US industry the capability and infrastructure to mass produce the components to build the ILC
- Another important goal is cost reduction

- Cryomodules (2000 required for 500 GeV of linac)
- SCRF Cavities: (16,000)
  - Reliably achieve $\geq$ 35 MV/m and Q ~1×10^{10}
- RF couplers and Cavity Tuners (16,000 each)
- RF Components
  - ~ 650 klystrons (1.3 GHz, 10 MW, 1.5 ms, 5 Hz)
  - ~ 650 modulators
  - Waveguide, circulators, host of other RF and vacuum components…

Industrialization

- Large Cryogenic systems (~ 40 KW at 1.8 K)
- Detectors, instrumentation, etc…
- Civil construction
  - A huge job (currently estimated @ 40% of the ILC cost)
- In FY06 the GDE plans Industrial cost estimates
  - Limited in scope (available funding is small)
- US industrialization for ILC is just beginning
  - FNAL helped create an Industrial Forum in 2005
  - Industrial involvement in cost estimates has started
  - Need industrial studies aimed at cost reduction
  - Need industry to build things !
- Our ability to engage U.S. industry is limited by the available funding

Civil and Site Development

- **Goal: Determine the best possible site for an ILC in Illinois**
- **With the GDE we are developing the ILC Civil Design**
  - **Tunnel Design (diameter, # shafts, laser-straight vs curved, cost)**
- **Site specific machine and Civil design will start in FY07**
  - **Geological, environmental, community impact studies**

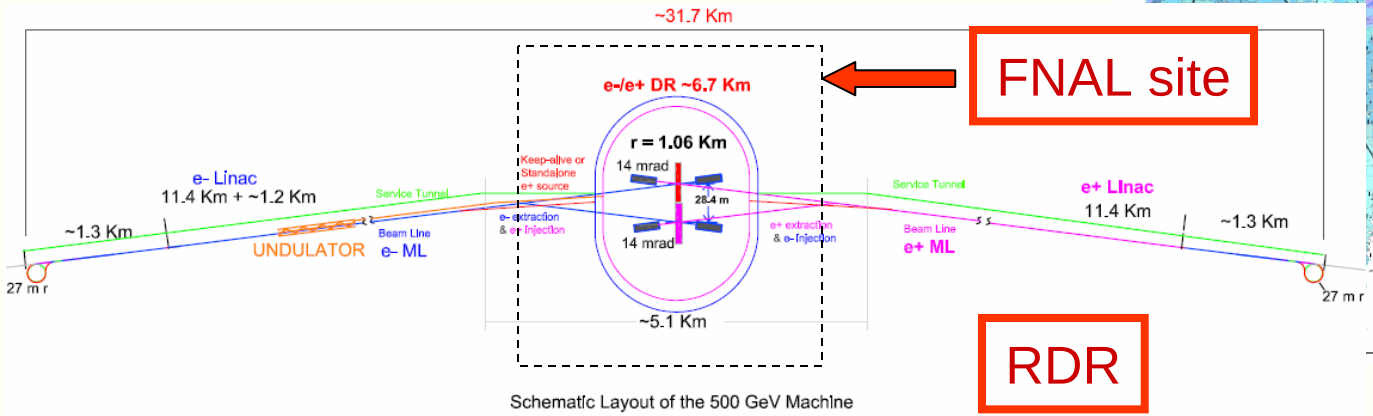

Schematic Layout of the 500 GeV Machine

FNAL site

RDR

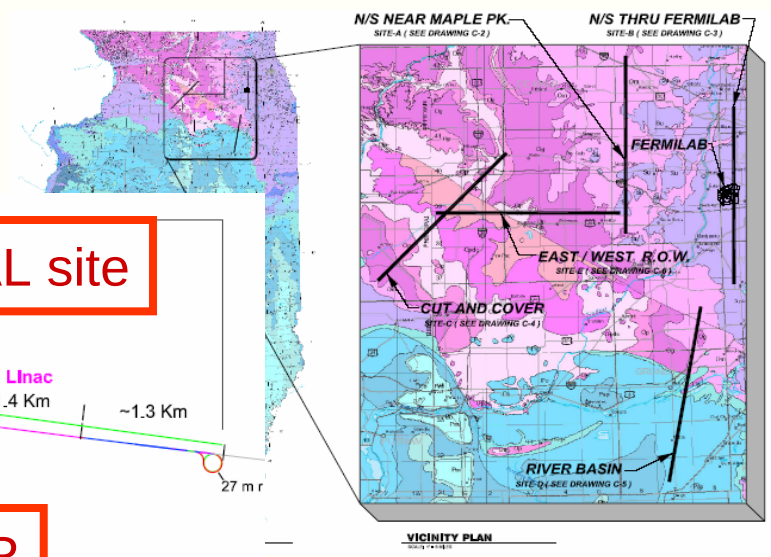

Outreach and State of Illinois

- **Outreach:**
  - ILC task force (promote Staff & User involvement, report done)
  - Citizen task force exists (+ new one focused on ILC siting)
  - Envoy program (~40 FNAL physicists, engineer act as one-on-one contacts to key community and science policy makers)
- **State of Illinois**
  - Working with Illinois Dept of Commerce and Economic Opportunity (IDCEO) to explain benefits of ILC
  - Working with NIU dept of Economics on Financial impact, job creation, benefits to Illinois industry, etc.
  - Working closely with ANL and nearby Universities (success in past in gaining state support: ICAR, NICADD, ANL bldgs)
  - Funding for a $ 35 M building (Illinois Accelerator Research Center) on the FNAL site is in the current Illinois Capital Bill
  - IARC goal is to promote University and Industrial work on ILC

Conclusions

- Fermilab has a large and growing ILC effort
- Our prime objective is to position ourselves to be a strong host candidate in the U.S. for this machine
- We work closely with international partners in the GDE on the machine design and on R&D
  - Developing broad ILC collaborations
  - Building an extensive SCRF infrastructure
  - Industrialization is starting
- Working with the State of Illinois and on Outreach
- FNAL made a lot of progress in FY06…
- We have big plans…and a variety of problems…
- We welcome your advice