Proton Driver: Emphasis on Deliverables

Giorgio Apollinari

Workshop on Very Long Baseline Neutrino experiments with a PD

FNAL, March 6th -7th, 2006

GWF Idea: Proton Driver

- **New* idea incorporating concepts from the ILC, the Spallation Neutron Source, RIA and APT.**
  - Copy SNS, RIA, and JPARC Linac design up to 1.3 GeV
  - Use ILC Cryomodules from 1.3 - 8 GeV
  - H^- Injection at 8 GeV in Main Injector
- **"Super Beams" in Fermilab Main Injector:**
  - 2 MW Beam power at both 8 GeV and 120 GeV
  - Small emittances ==> Small losses in Main Injector
  - Minimum (1.5 sec) cycle time (or less)
  - MI Beam Power Independent of Beam Energy: *flexible program*

* *The 8 GeV Linac concept actually originated with Vinod Bharadwaj and Bob Noble in 1994,when it made no sense because the SCRF gradients weren't there. Revived and expanded by G.W.Foster in 2004*

GWF Idea: 8 GeV Superconducting Linac

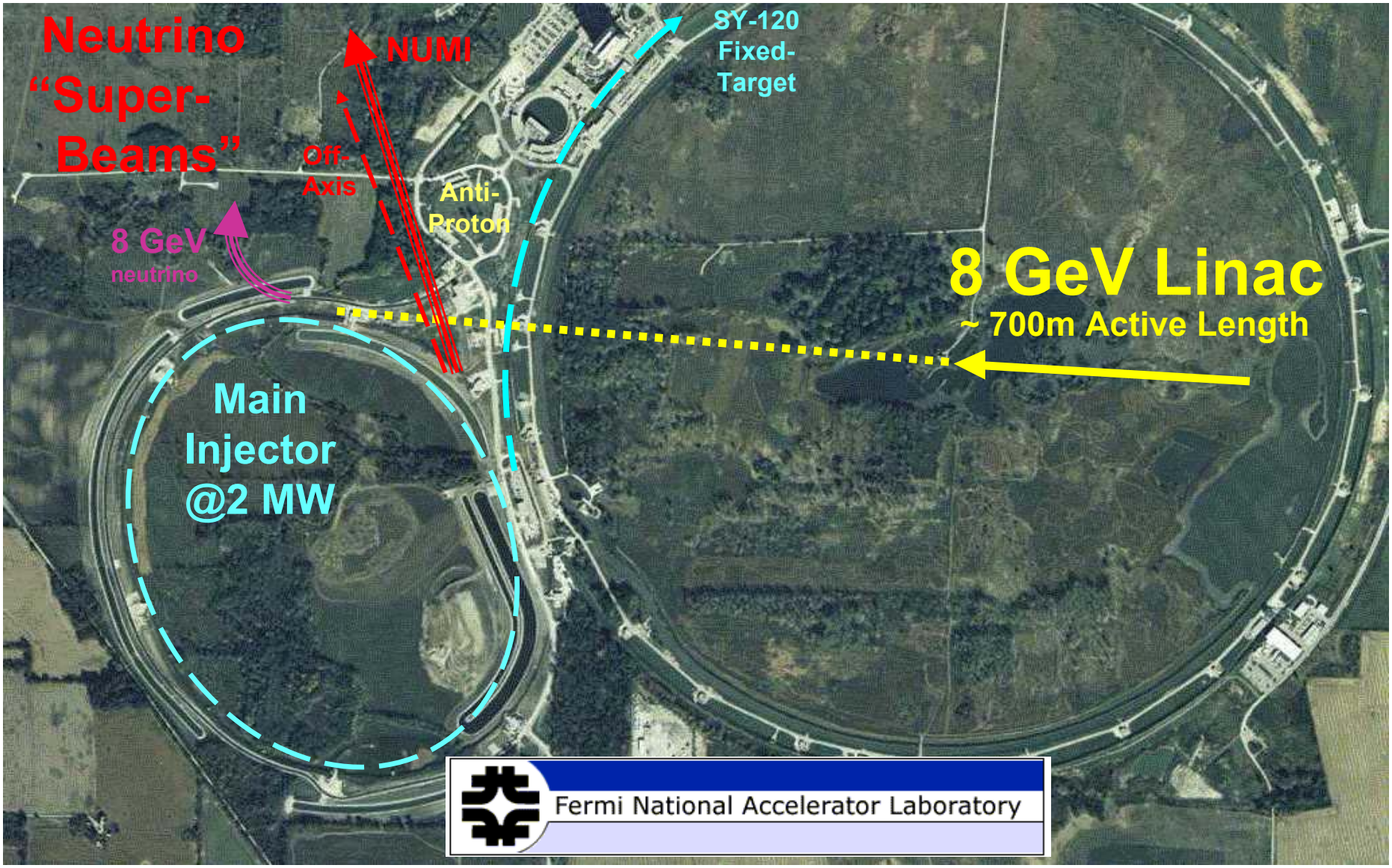

Motivations for Linac Proton Driver

- **Protons on Target for Neutrino Program**
  - 2 MW at 30-120 GeV from the Main Injector
  - 0.5 - 2 MW at 8 GeV directly from the Linac
  - Clear path for further MI upgrades > 2 MW

  Linac Provides All Three
- **Synergy with International Linear Collider**
  - *Exactly* the same technology for E ~ 1.5 - 8 GeV
  - 1.5% Scale Demonstration Project & U.S. Cost Basis
  - Seed Project for U.S. Industrialization of SCRF

0.5 MW Initial 8 GeV Linac

11 Klystrons (2 types)
449 Cavities
51 Cryomodules

"PULSED RIA"

Front End Linac

325 MHz
0-110 MeV

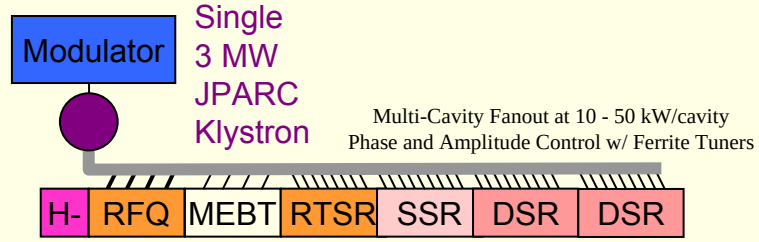

β<1 TESLA LINAC

1300 MHz 0.1-1.2 GeV

2 Klystrons
96 Elliptical Cavities
12 Cryomodules

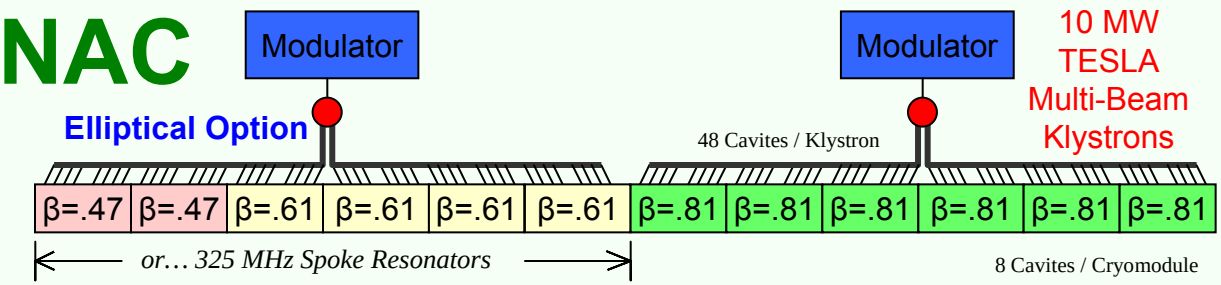

TESLA LINAC 1300 MHz β=1

8 Klystrons
288 Cavities in 36 Cryomodules

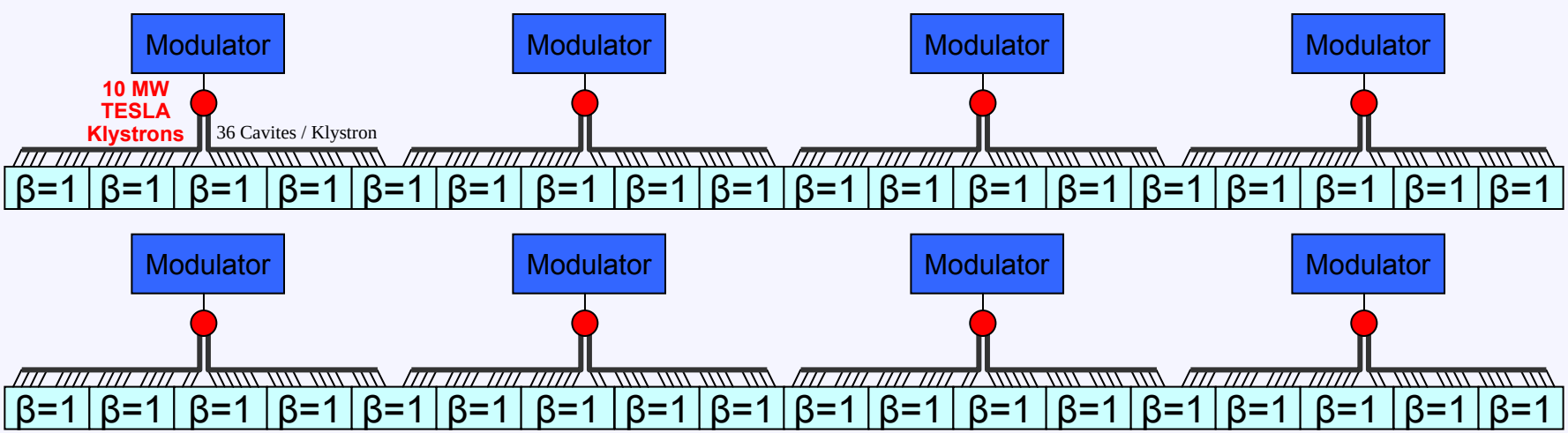

Main Parameter Decisions

1. **Main Injector Beam: (1.5 E14, 1.5 sec, 2 MW)**
2. **Pulse Parameters: (8 mA x 3 msec x 2.5 Hz)**

   Ultimate Upgrade: (25 mA x 1 msec x 10 Hz)

3. **Operating Frequency: (1300 MHz / 325 MHz)**
4. **Copper – to – SCRF transition: (10 MeV)**
5. **Spokes–to–Elliptical transition: (110 - 400 MeV)**
6. **Design Margins on 8 GeV H^- Transport**

3. Linac Operating Frequencies

Following the selection of the Cold SCRF Option for the ILC,

We have chosen TESLA/XFEL Compatible Frequencies:

- **1300 MHz** Main Linac (= ILC / TESLA / XFEL)
- **325 MHz** (=1300MHz/4) Front-End Linac (= JPARC) ***(a gift !)***

Valuable assets at these frequencies:

1. SRF Cavities
2. RF Couplers
3. Cryomodule Designs
4. Klystrons (multi-year development)
5. Front-End Linac Designs (325 MHz)
6. Collaborators (e.g. ILC, Euro-XFEL, JPARC…)

4. Copper-to-SCRF Transition

- **We have chosen 10 MeV (RFQ + warm TSRs.)**
  - Much lower than SNS (~ 186 MeV)
  - Allows Single Klystron to drive linac up to 110 MeV
  - Leverages uses of Fast Phase Shifters to produce many channels of RF from a single Klystron
- **Previous Design Study assumed 85 MeV DTL**
  - Conventional Solution, still valid
  - Modified Commercial Product at 325 MHz
  - Required 7 Klystrons, $30M + contingency etc.

Vision for FNAL Future – EPP 2010

New Initiatives at Fermilab

Overarching Goals:

Enable the most powerful attack on the fundamental science questions of our time

Provide world class facilities for HEP as part of the global network

Develop science and technology for particle physics and cosmology research

Specific Goal: make vital contributions to particle physics in the next decade by:

- *Developing a powerful new tool for discovery at the energy frontier (ILC)*
- *Maintaining the foremost neutrino program (NOvA, proton driver(s), +)*

“Original (~’05)” ILC-PD Interplay

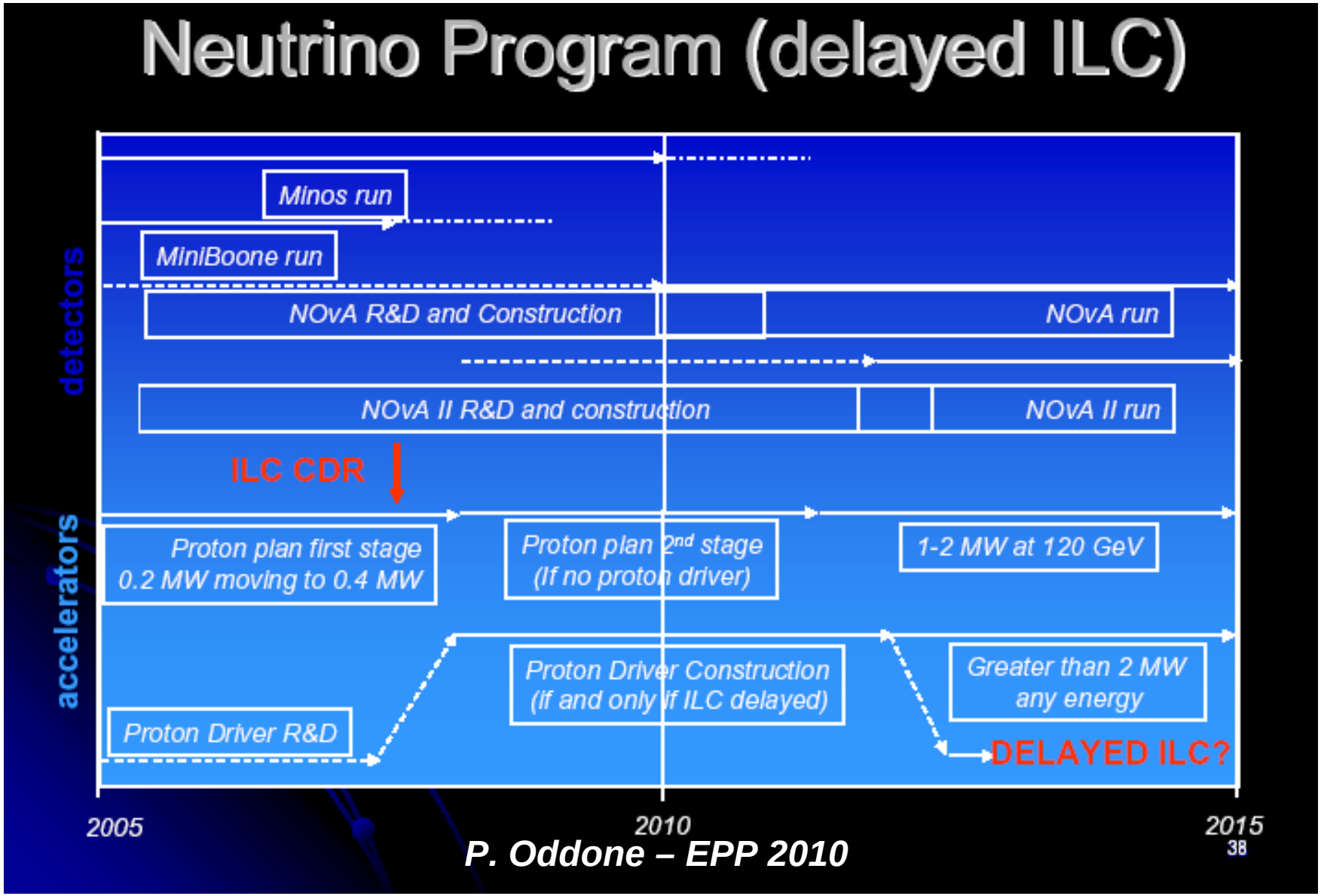

P. Oddone – EPP 2010

“Updated (~’06)” ILC-PD (HINS) Interplay

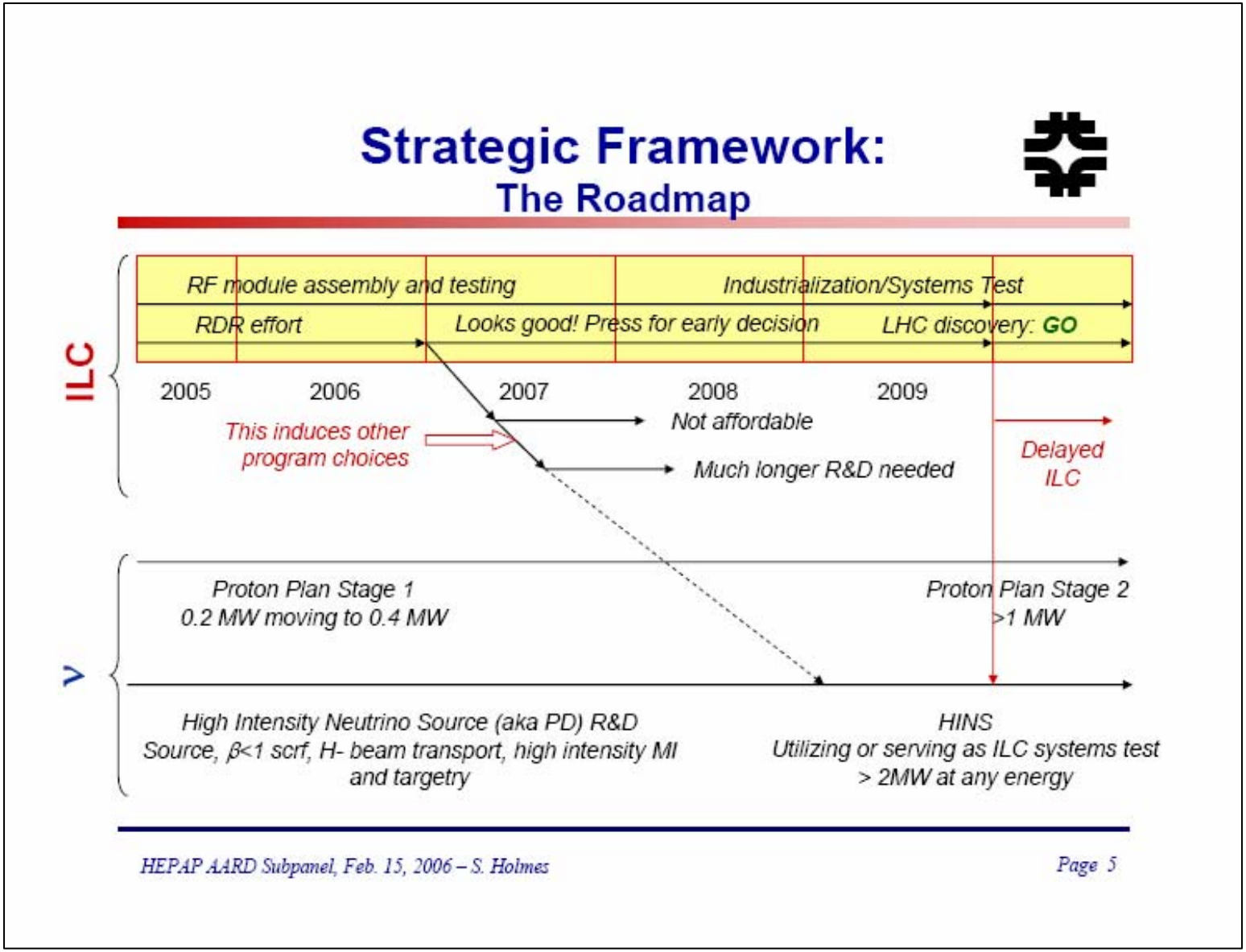

ILC-PD (HINS) Interplay (cont.)

Program Elements and Goals

Intermediate Term

- Goals:
  - Establish Fermilab as preferred host lab for ILC.
    - In collaboration with national and international partners
    - World leader in scrf technologies
  - Work with GDE to define and implement an industrialization plan and the associated major systems test which we believe is required before the start of construction.
  - Develop technologies that could be married to ILC developed cryomodules, to support construction of a high intensity neutrino source if ILC construction is delayed.
  - Assist in the successful commissioning of the LHC and develop a full scale Nb_3Sn quadrupole for LHC upgrade.
    - Under the aegis of the LHC Accelerator Research Program (LARP)

Cash Talks !

Resources

	Fermilab Accelerator R&D Program					
	Dollar amounts in millions, Direct cost only					
	FY2004	FY2005	FY2006	FY2007	FY2008	FY2009
Run II Upgrades	$21.0	$14.4	$5.6	$0.0	$0.0	$0.0
Proton Plan	$0.0	$3.9	$6.9	$6.9	$1.6	$1.7
Near Total	$21.0	$18.3	$12.5	$6.9	$1.6	$1.7
Linear Collider	$3.3	$4.9	$9.2	$31.6	$33.9	$35.1
RF Infrastructure & Industrialization	$0.0	$6.4	$12.6	$5.0	$10.0	$30.0
ILC Bid to Host	$0.0	$0.0	$0.0	$3.0	$4.0	$5.0
High Intensity Neutrino Source	$0.9	$4.4	$8.3	$8.5	$8.8	$9.1
Superconducting Magnets (core)	$2.9	$3.1	$2.5	$2.3	$2.4	$2.4
LARP	$0.0	$0.8	$2.9	$3.0	$3.0	$3.1
Intermediate Total	$7.1	$19.6	$35.5	$53.3	$62.0	$84.7
Photoinjector	$1.1	$1.6	$1.0	$1.0	$1.0	$1.5
Muons	$1.5	$1.3	$1.2	$1.5	$1.6	$2.2
SciDAC	$0.1	$0.1	$0.1	$0.1	$0.1	$0.1
Far Total	$2.7	$2.9	$2.3	$2.7	$2.8	$3.9

- The message:
  - Very significant buildup has already started: ILC, HINS, and associated rf infrastructure.

HINS Program Organization

- **Program Leader** — **G.A.**
- **Program Engineer** — **B. Webber**
- **MI/Linac Integration Leader** — **A. Marchionni**

3.0 Accelerator Systems
B. Webber

- 3.1 Beam Diagnostics & Instrumentation
  M. Wendt
- 3.2 Modulators, Pulse Transformers & Power Supplies
  D. Wolff / C. Jensen
- 3.3 Cryogenics
  A. Klebaner / T. Peterson
- 3.4 Klystrons
  A. Moretti
- 3.5 RF Distribution
  RF Distr - P. Prieto
  Phase Shifter - I. Terechkine, D. Wildman
  RF Controls - B. Chase
- 3.6 Utilities
  LCW - M. Ball
  Vacuum - T. Anderson
- 3.7 Accelerator Controls and Software
  J. Patrick / S. Lackey
- 3.8 System Engineering
  Mechanical - T. Nicol / J. Leibfritz
  Alignment - J. Volk
  Power - D. Wolff

4.0 Beam Line Components
G. Apollinari

- 4.1 Ion Source through MEBT
  C. Schmidt
  Ion Source - D. Moehs, H. Piekarz
  RFQ - G. Romanov
  Chopper - R. Madrak
  MEBT - J. Leibfritz
- 4.2 RT TSR
  G. Romanov
  TSR - G. Romanov
  Solenoids - J. Tompkins
  Assembly - T. Page
- 4.3 Spoke Cryomodules
  G. Apollinari
  Spoke Cavities - K. Shephard, ANL, G. Apollinari
  Cryostats - T. Nicol, T. Page
- 4.4 Beta = 0.81 Cryomodules
  N. Solyak
  Cavities - N. Solyak, (MSU)
  Cryostat - (ILC)
- 4.5 Beta = 1 Cryomodules
  (T. Nicol / R. Stanek)
  (ILC)
- 4.6 MI Transfer Line
  D. Harding

2.0 Conventional Facilities
D. Bogert
E. McCluskey

5.0 Machine Design
P. Ostromov
Linac - P. Ostromov
Transfer Line - D. Johnson
Main Injector Injection - (BNL?)
Main Injector Performance -

6.0 Prototype Facilities
B. Webber
6.1 Meson Facility - L. Beverley

(Expected) Charges for HINS Program

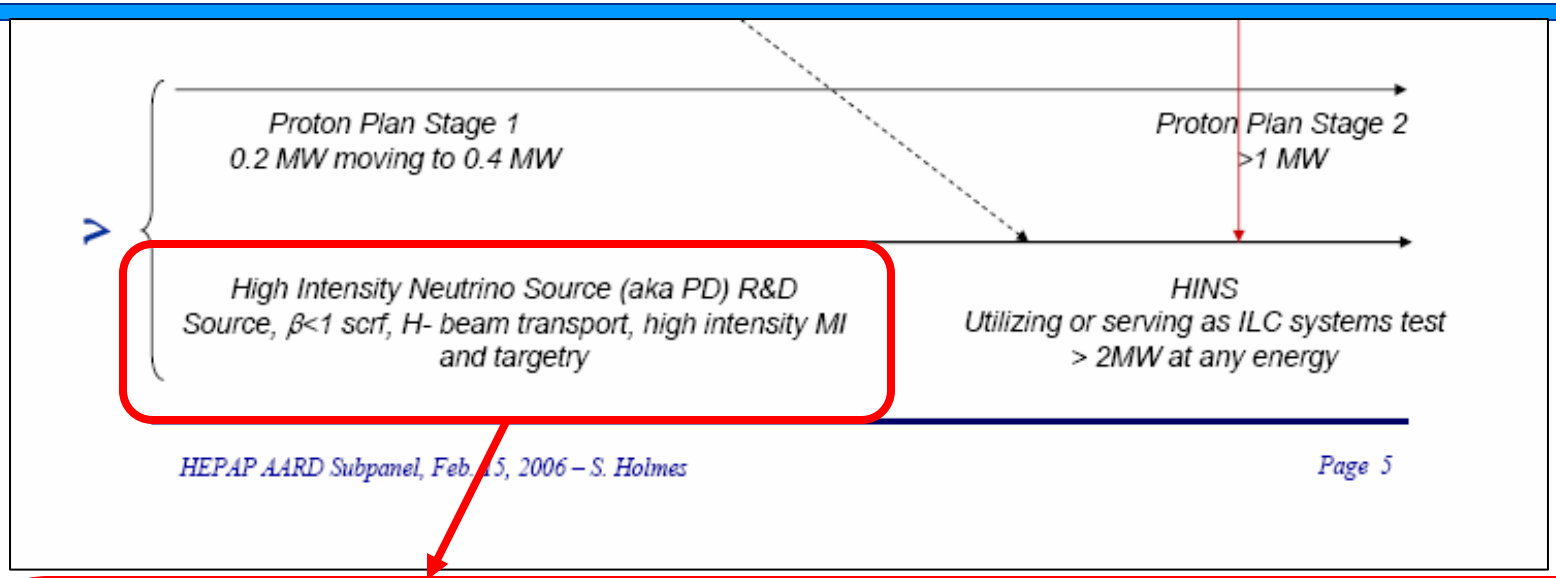

- Design **fully ILC-Compatible PD**
- **Prove, Develop & Build Front-End in Meson (0-100 MeV)**
  - Much of Technical Complexity in Front End Mechanical/RF Design
  - Test Amplitude/Phase Modulator Technology and RF Power Scheme with H^-
  - Test RT-SC Transition
  - Send First Beam (in the world) through Spoke Cavities
- **Design/Plan MI Injection Line & Upgrade**
- **ILC Test/PD Compatible Civil Construction**

Meson Floor Plan

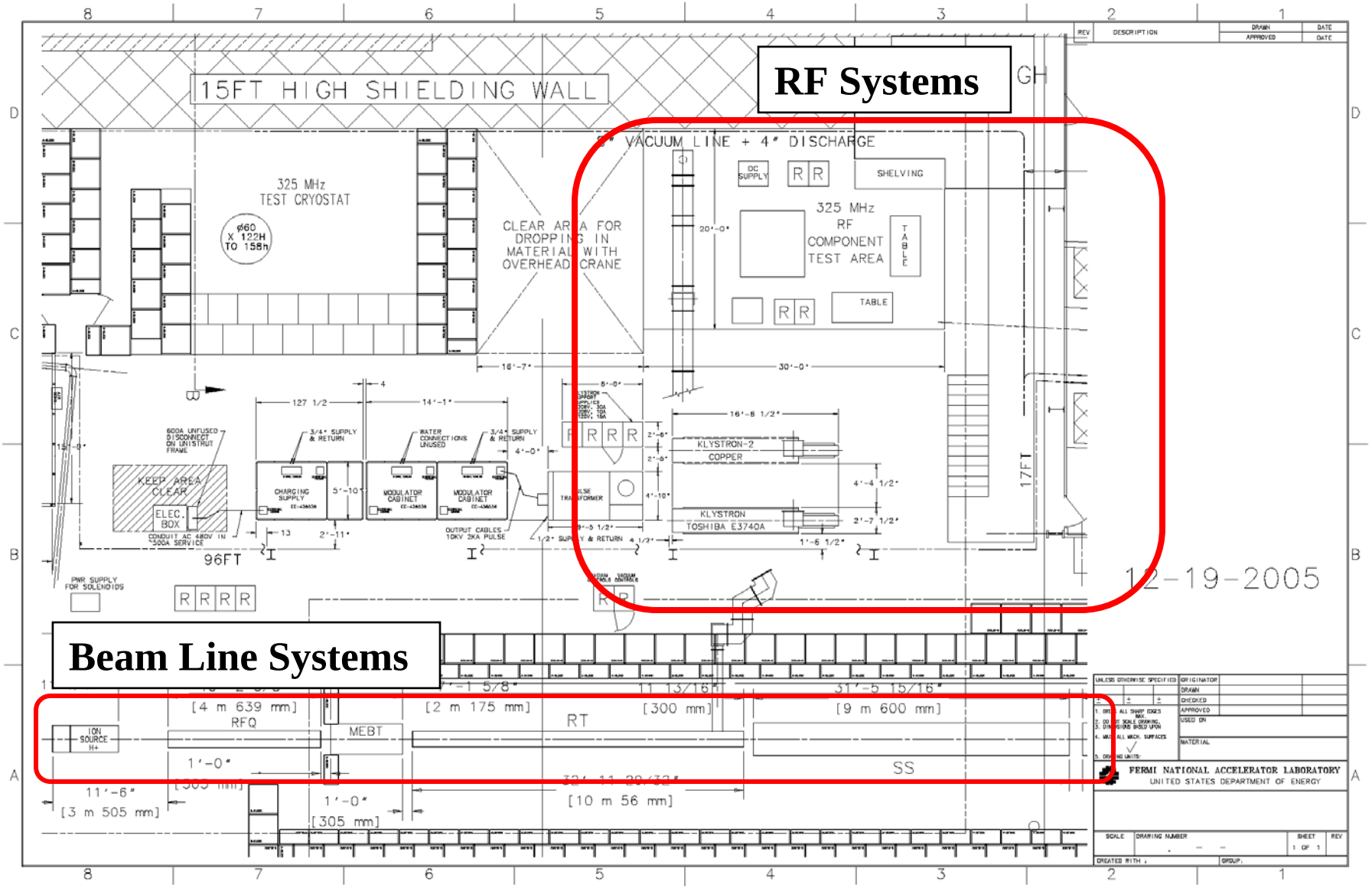

Cleared Area for Proton Driver in Meson

325 MHz Front-End Linac

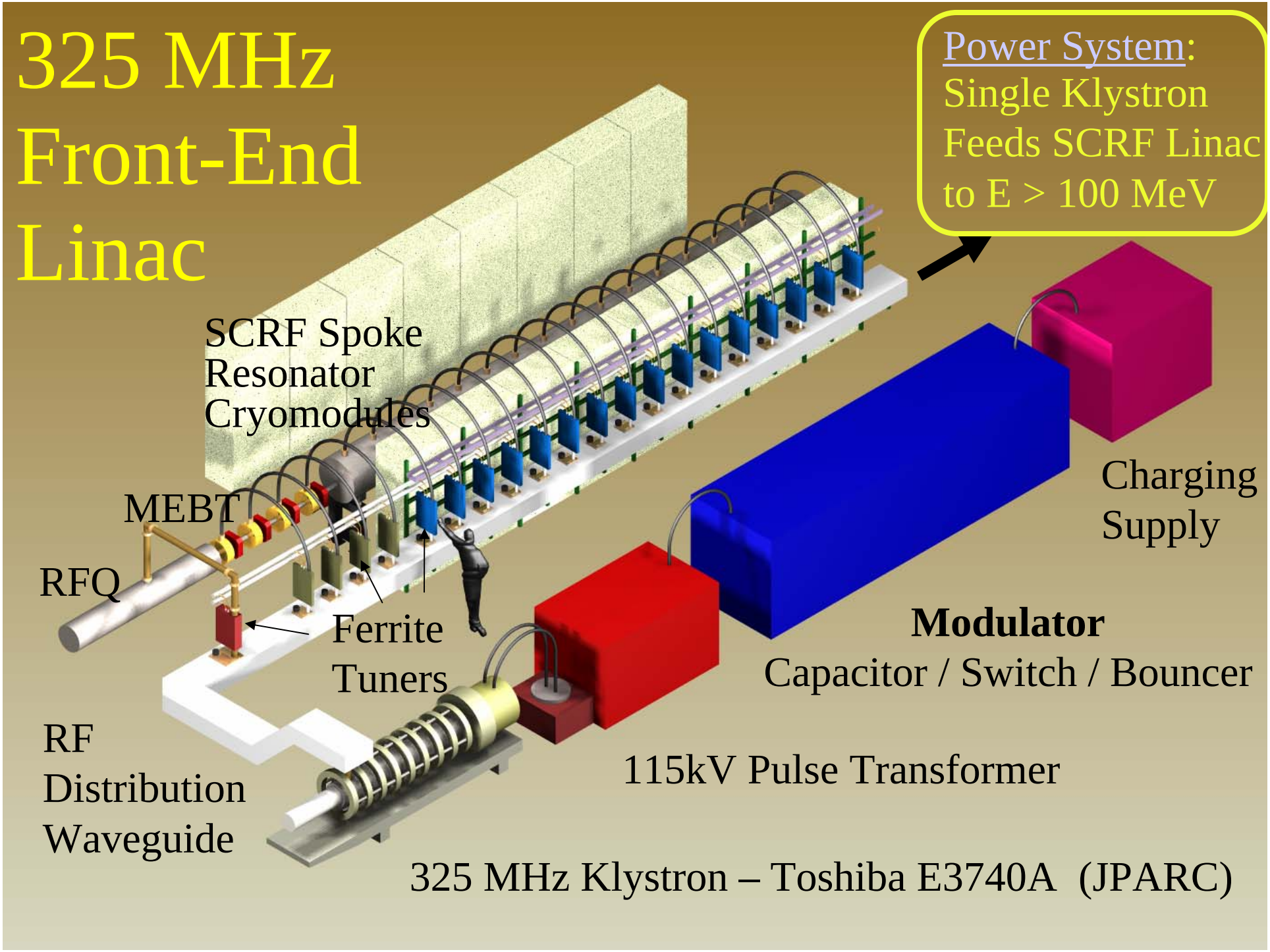

Meson Front End general layout

Ion source H^-, LEBT			**50 keV**
Radio Frequency Quadrupole		**4-5 m,**	**2.5 MeV**
MEBT	**(2 bunchers, 4 SC sol., chopper)**	**4 m**	
RT TSR section	**(16 resonators, 16 SC solenoid)**	**10 m**	**10 Mev**
SSR section	**(18 resonators, 16 SC solenoids)**	**14 m**	**30 MeV**
DSR section	**(33 resonators, 18 SC solenoids)**	**18 m**	**120 MeV**

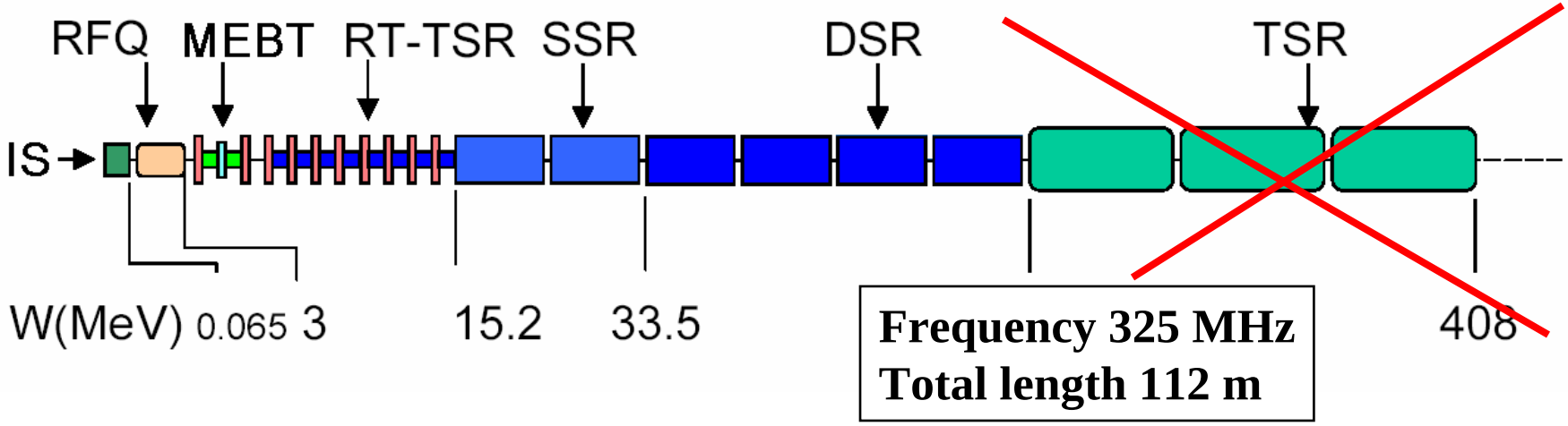

Meson Front End general layout

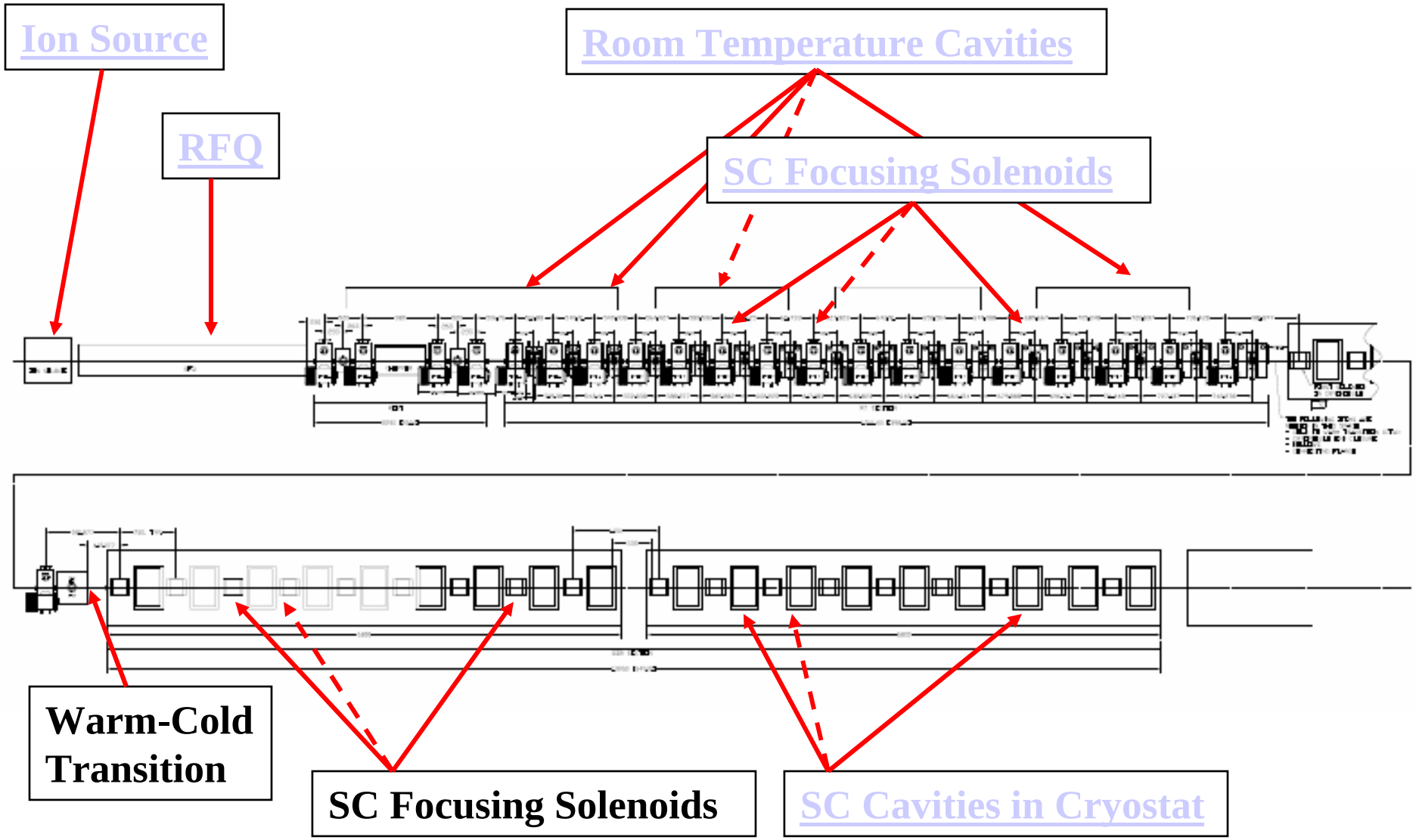

Ion source R&D (1)

- **Initial idea:multicusp, rf-driven, cesium enhanced source of H^- (SNS,DESY).**
  - Output energy 50 keV
  - Output peak current 12.7 (38) mA
  - Pulse length 3.0 (1.0) ms
  - Pulse rate 2.5(10) Hz
- **Recent Developments: Plasmatron or Magnetron**

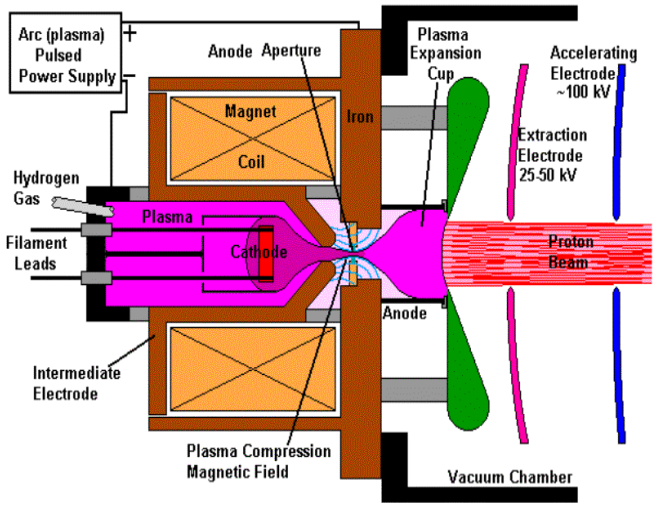

DUOPLASMATRON ION SOURCE

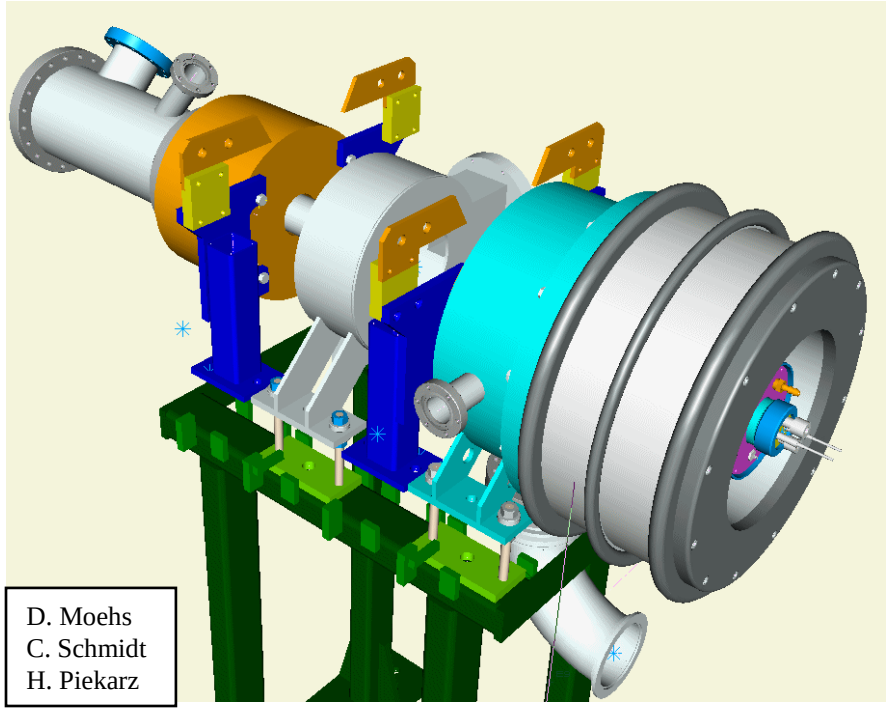
D. Moehs
C. Schmidt
H. Piekarz

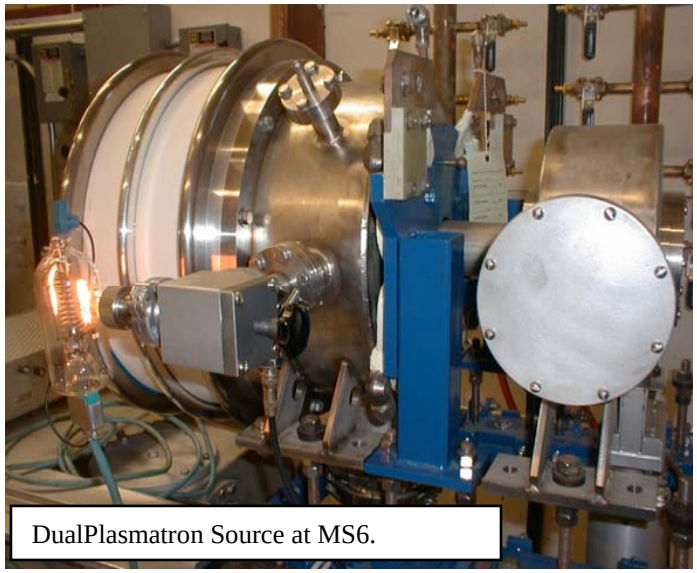
DualPlasmatron Source at MS6.

Ion source R&D (2)

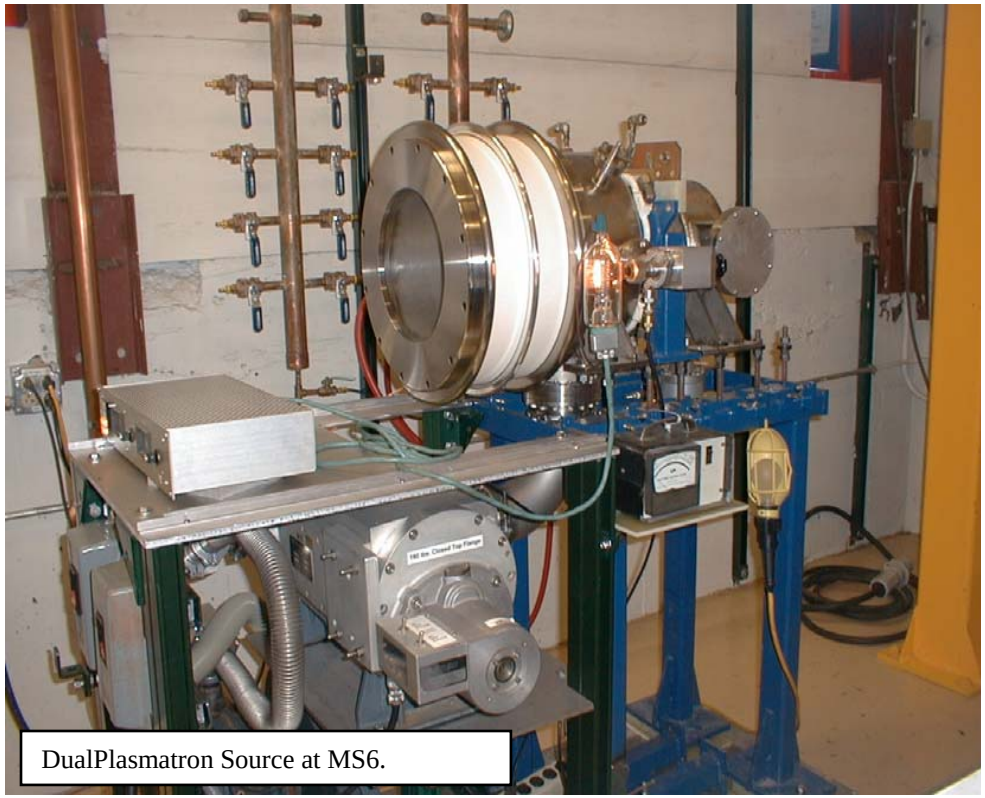

DualPlasmatron Source at MS6.

Solenoid PS

100 kV Power Supply

- **HV Tested to 75 kV**

RFQ R&D (1)

- **RFQs are standard devices for proton machines (J-PARC, SNS).**
- **Our additional requirement for RFQ beam dynamics design is an axisymmetric output beam to reduce halo formation in MEBT and RT SR section.**
- **Beam-dynamics/Mechanical Collaboration between ANL & FNAL**
  - Design by P.Ostroumov, V.Aseev, A Kolomiets

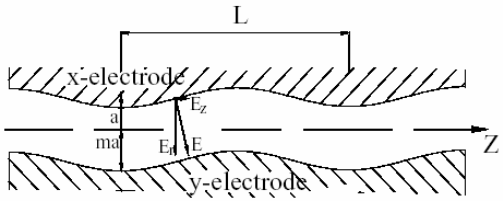

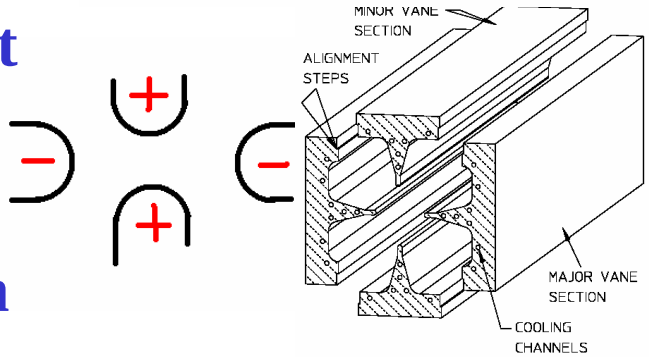

Table 1. Initial specifications for the RFQ design

	Parameter	Value
1	Input Energy, keV	50
2	Output Energy, MeV	2.5
3	Accelerated beam current, mA	40
4	Peak surface field, kV/cm	≤330
5	Total length of the vanes, m	~3
6	Acceleration efficiency, %	>95
7	Input rms transverse emittance, normalized, π mm mrad	0.25
8	Transverse rms emittance growth factor	<1.1
9	Longitudinal rms emittance, π keV·deg	≤150
10	Axial-symmetric output beam	yes

Figure 1 - The RFQ body

RFQ R&D – Vane Shapes

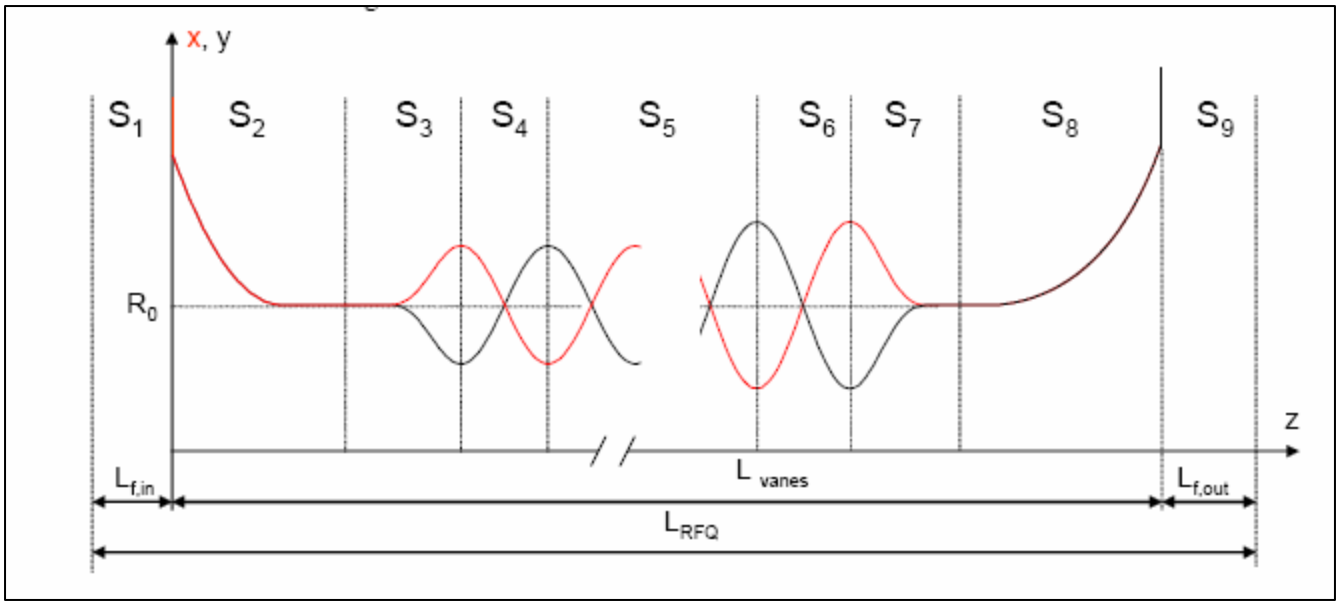

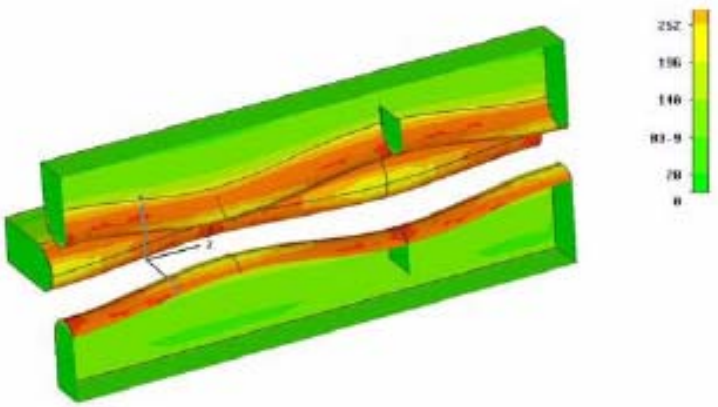

3. Cut-out view of the EMS model of the RFQ electrodes at β=0.0481,

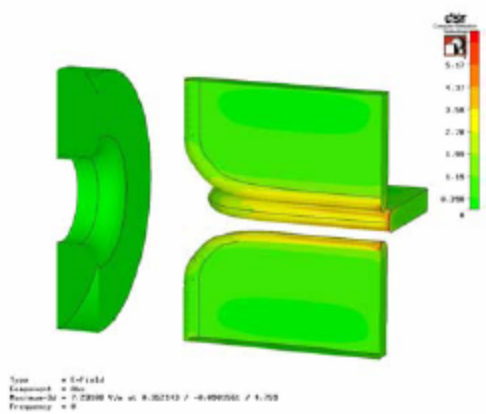

Figure 9. Cut out view of the input radial matcher in the EMS window.

RFQ R&D – Beam Dynamics

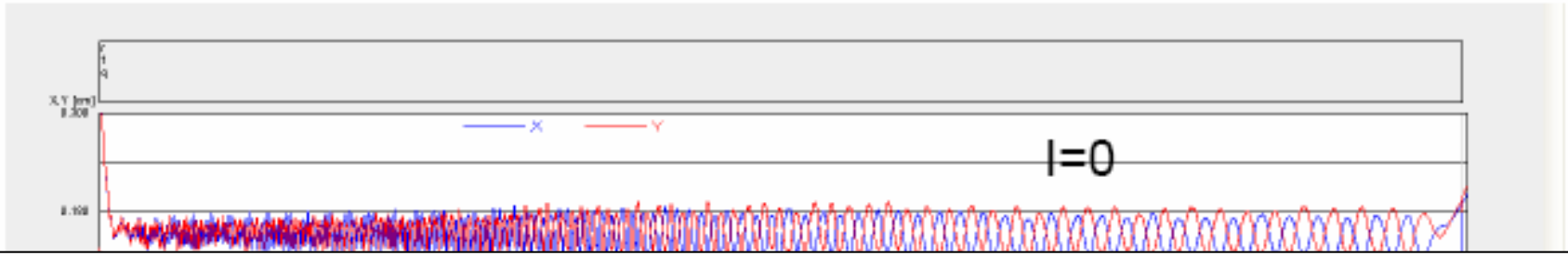

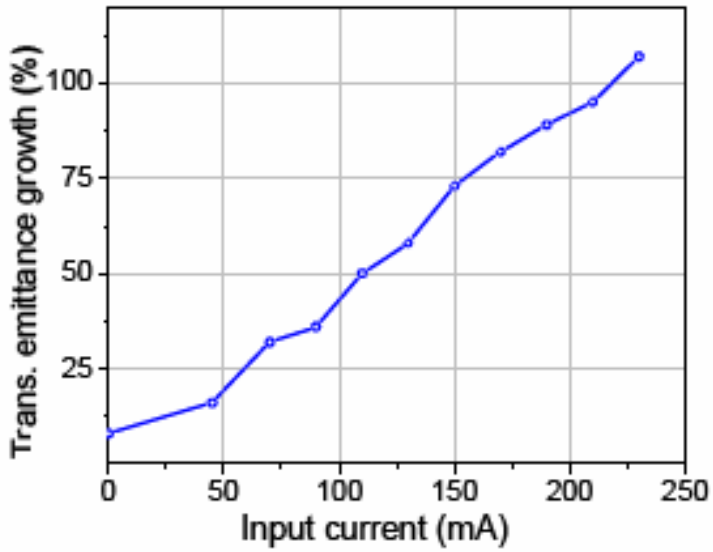

Figure 12. Transverse rms emittance growth factor in the cell #172.

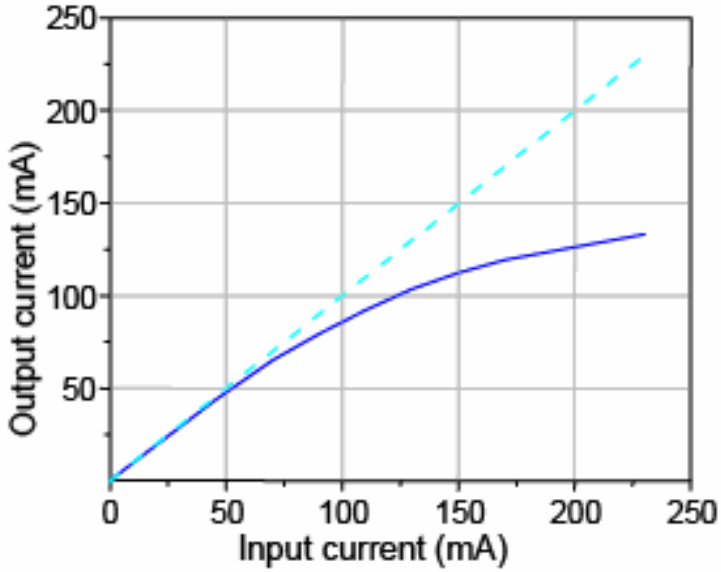

Figure 13. Transmission through the RFQ calculated for the same input transverse emittance.

RFQ R&D – Prototype Procurement

- **Sent RFQ (Request For Quotations) to several manufacturing companies in ~Sept. 05**
- **Received 3 replies with budgetary quotes in the ~0.5 M$ range and production schedule of ~6-12 months.**
- **Order placed in Jan ’06. Bids expected back 3/06 from 5-6 companies.**
  - Companies may selected to adopt ANL/FNAL design or propose their own design meeting FNAL Beam specs.
  - Power Couplers/Vacuum Chambers included in order
  - Companies requested to provide quote for Commissioning support.

Back

RT SR section R&D (1)

The main advantage of RT SR is its high shunt impedance.

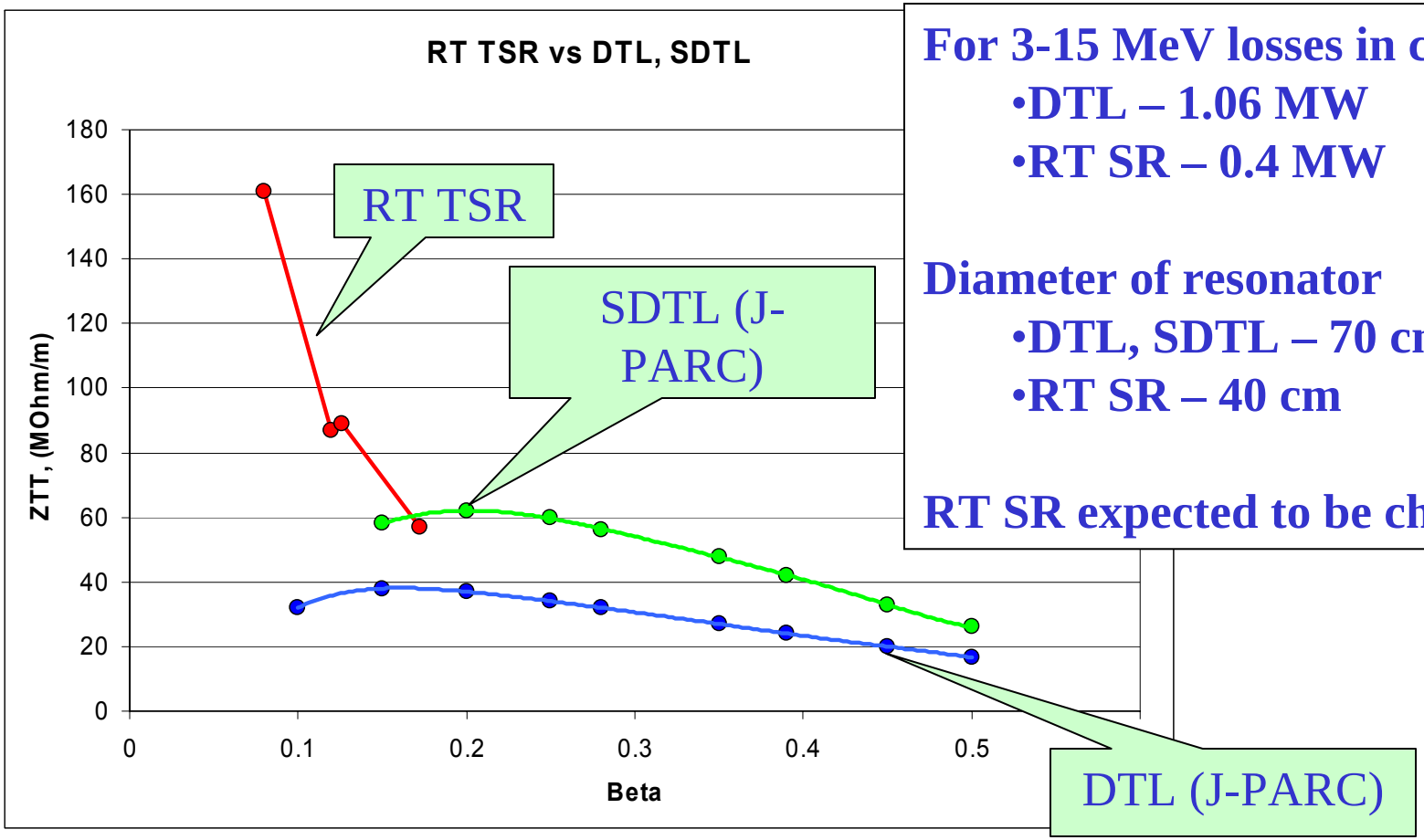

For 3-15 MeV losses in copper:

- **DTL – 1.06 MW**
- **RT SR – 0.4 MW**

Diameter of resonator

- **DTL, SDTL – 70 cm**
- **RT SR – 40 cm**

RT SR expected to be cheaper

RT SR section R&D (2)

- **Room Temperature Spoke Resonator (aka Cross-bar H-type resonators) section from 2.5 MeV to 10 MeV .**
  - Lower Power Consumption (~0.5 MW with beam)
  - Solenoidal Focusing (AxisSymmetric Beam)

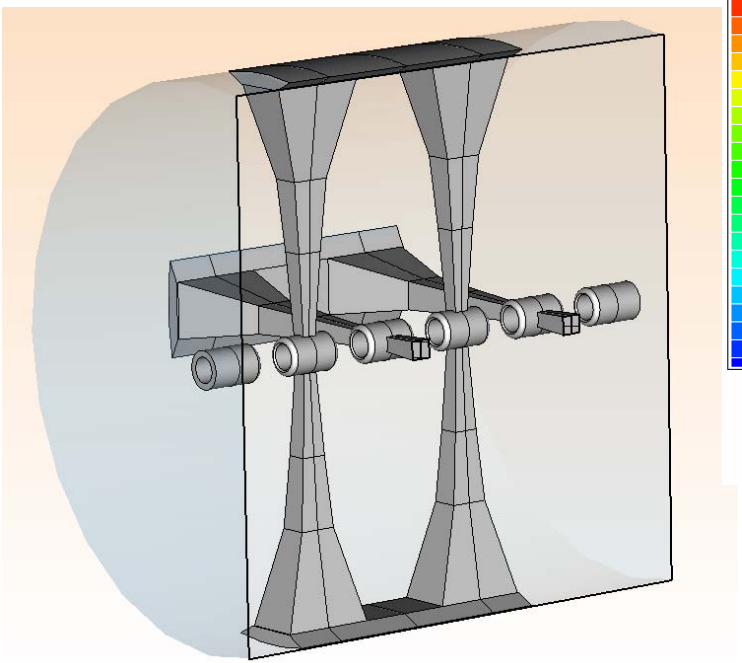

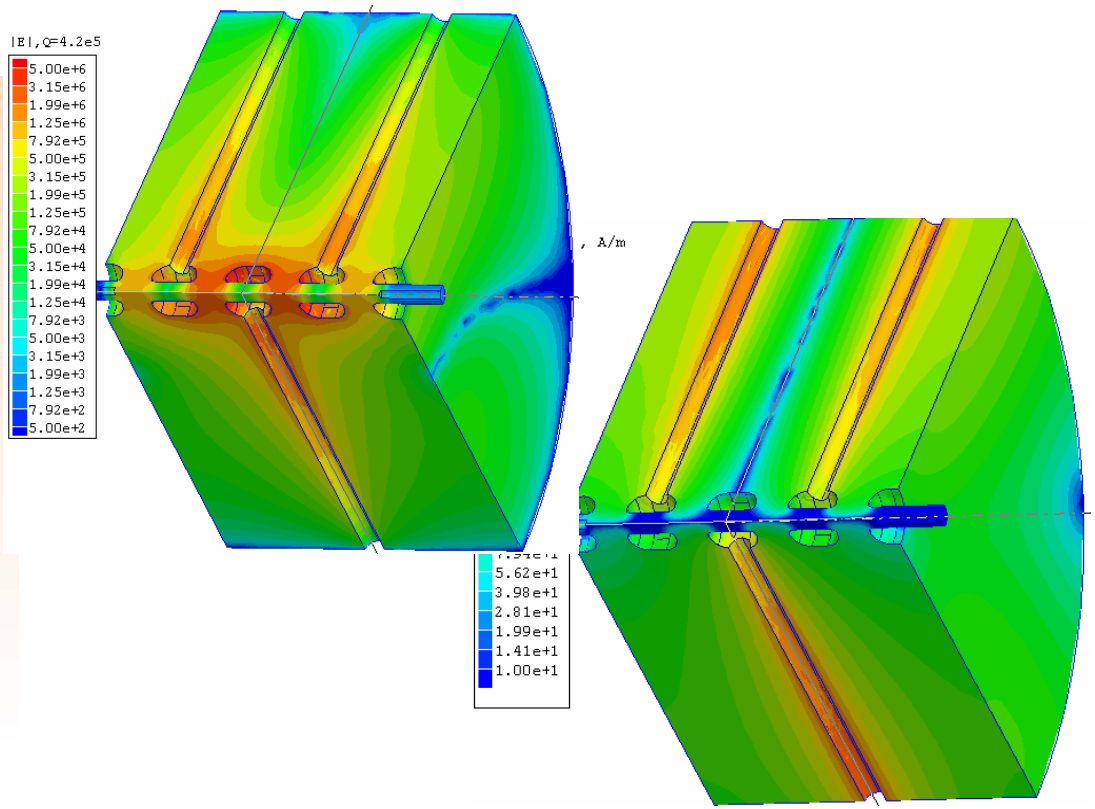

RT SR section R&D (3)

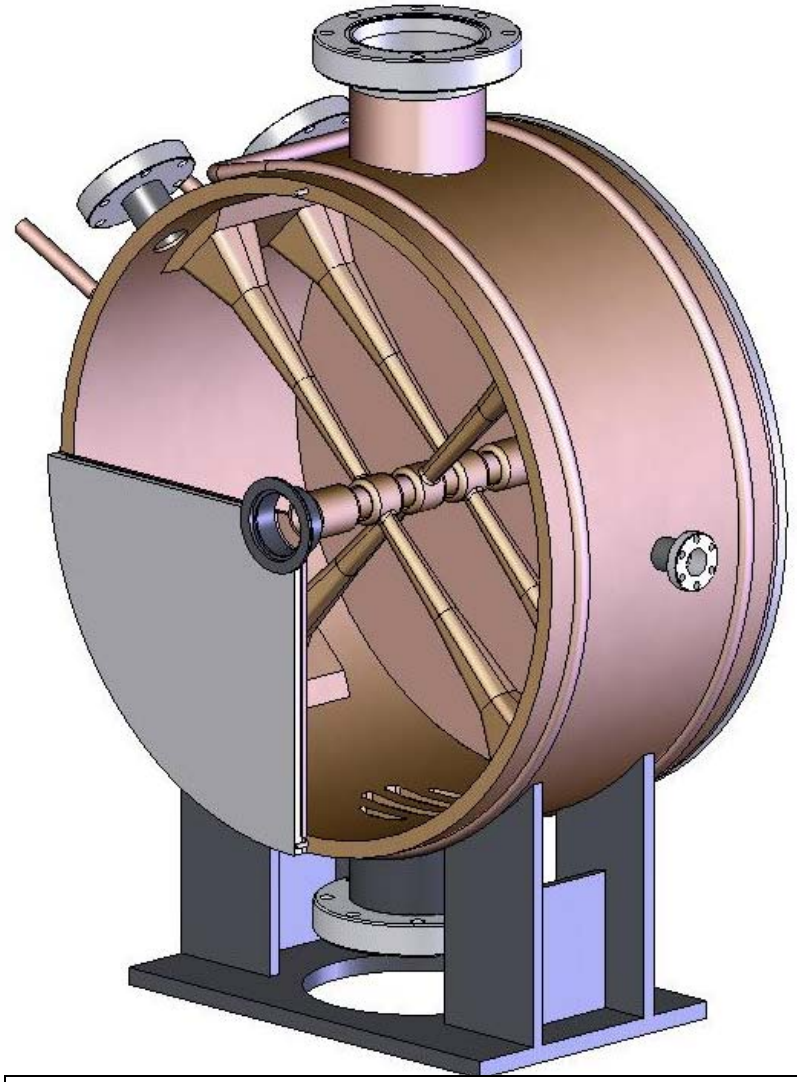

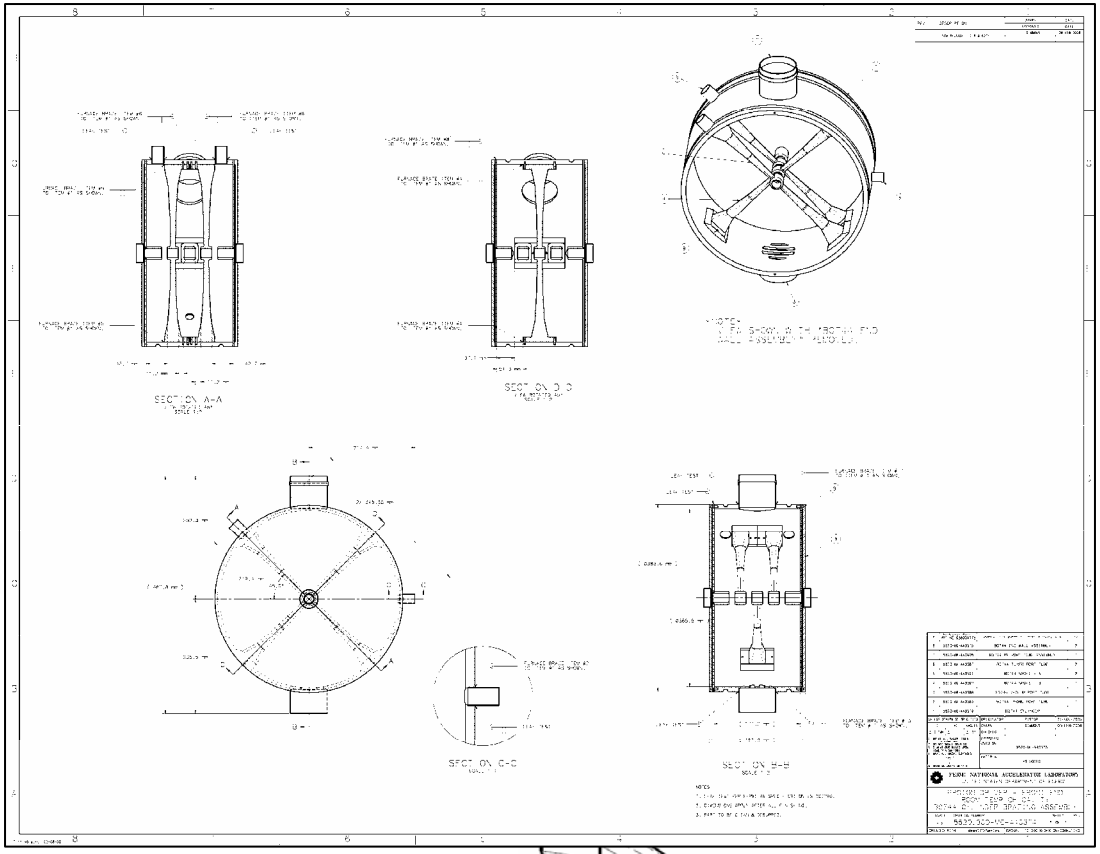

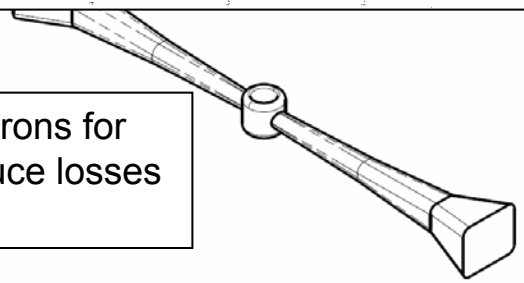

Roughness of 1 – 1.5 microns for spokes is required to reduce losses and probability of sparks

- **First Prototype Under Procurement**

Back

RT section Solenoid R&D (1)

- **Focusing solenoids will provide axisymmetric beam**
  - Reduce beam halo formation
  - Integral field spec requires SC magnet

	DTL	SSR	DSR
Number of solenoids in the section	4(MEBT) + 19	18 (9 x 2)	**18 ?**
Parameter			
Bore diameter	20 mm	30 mm	30 mm
Bore type	warm	cold	cold
Field Integral FI = $\int B^2 dl$ ($T^2 \cdot cm$)	**180 - 200**	300	**580**
Margin	**20 – 30%**		
Recommended Bm (T)			< 6
Leff (cm) @ Bm	< 10 cm	<10 cm	
Field extension	< 2*Leff	Sharp edges	Sharp edges
Available insertion gap (mm)	**235**	315	320

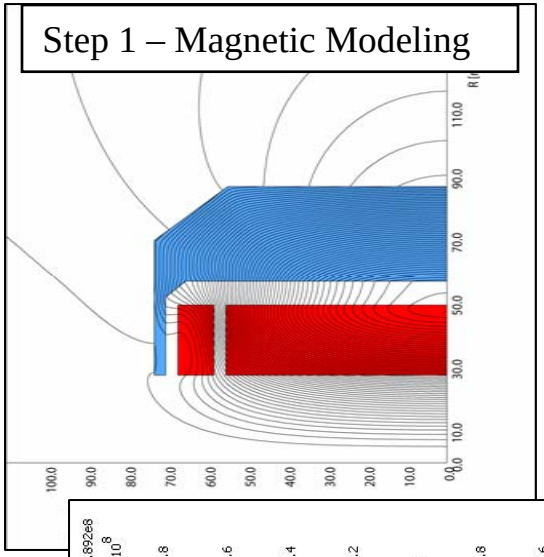

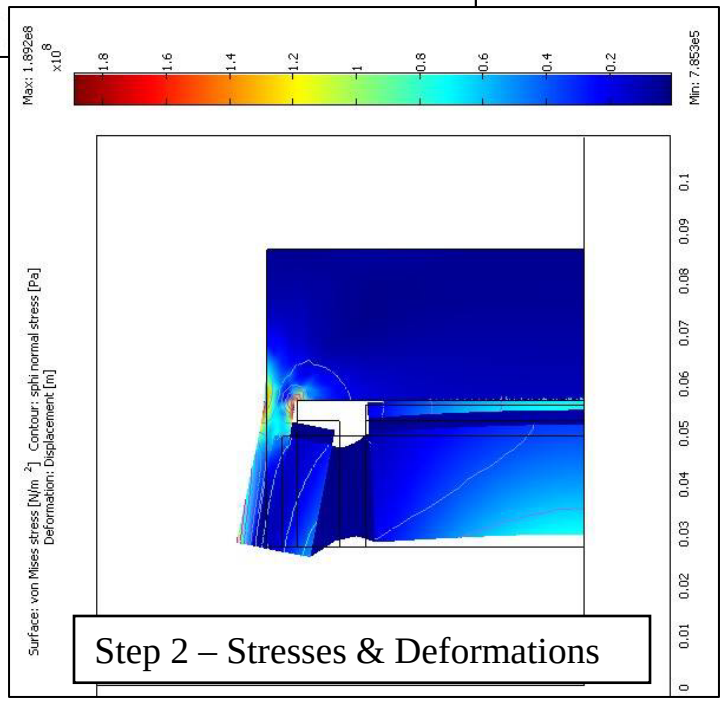

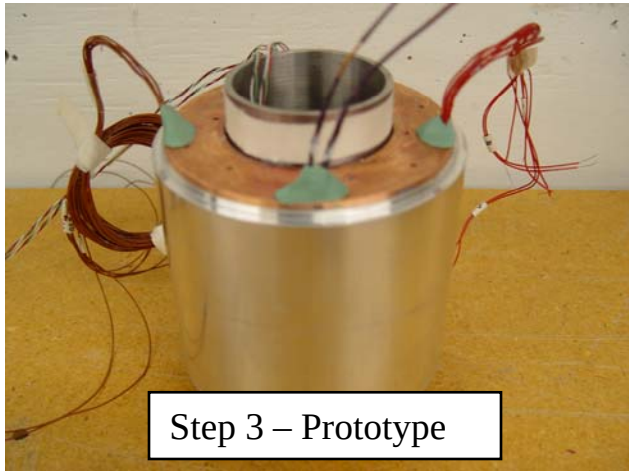

RT section Integration R&D

- **Solenoid Cryostat**

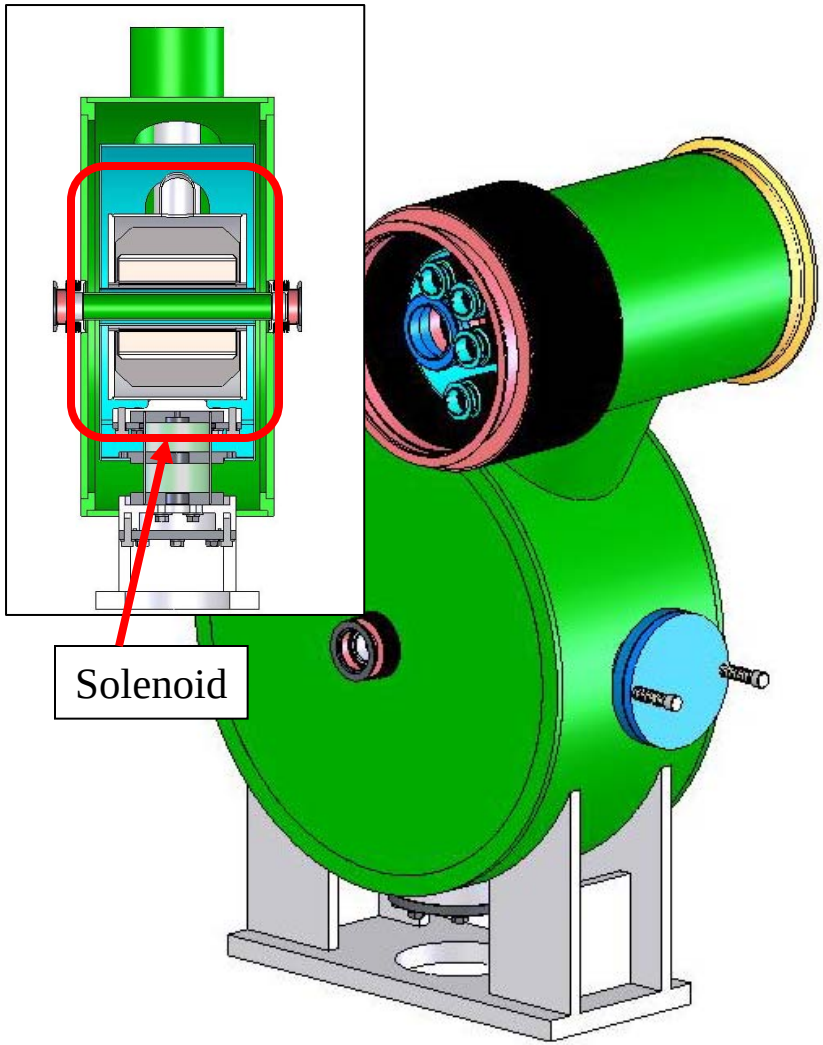

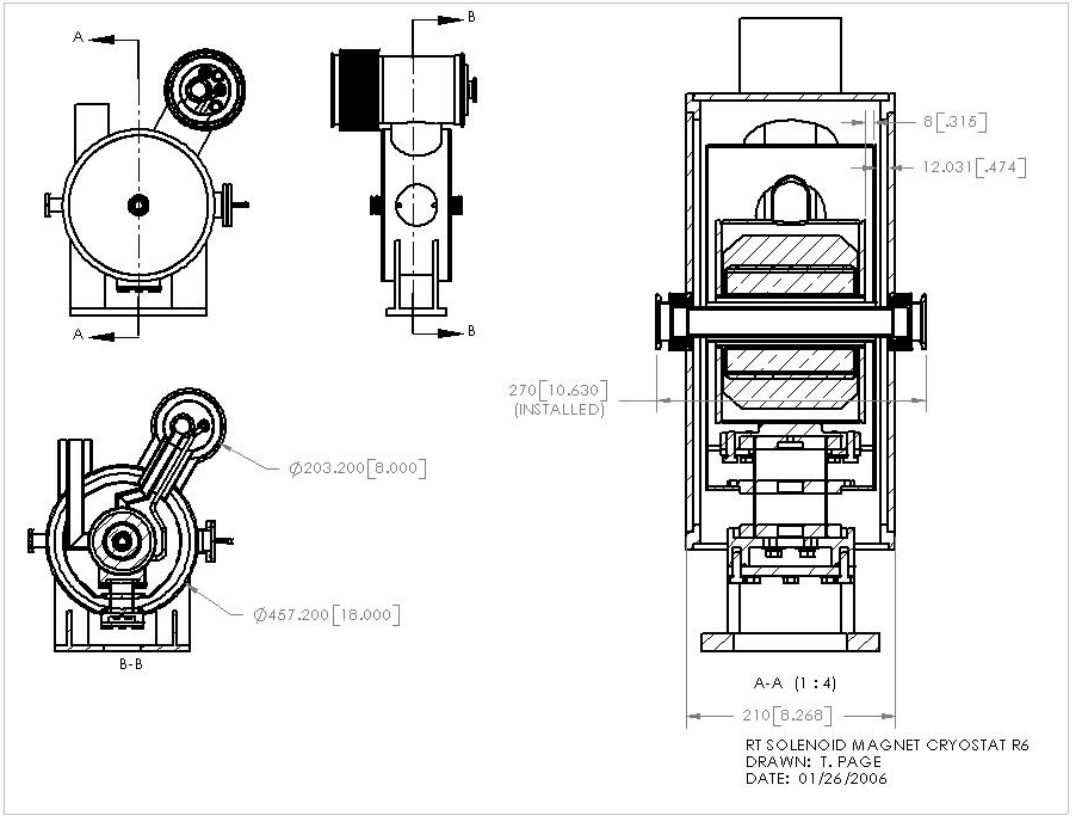

Back

SC Spoke Resonator R&D (1)

- **Spoke Cavities and CryoModules**
  - Why Spokes
    - Fewer types & higher operating T (4 K)
    - Simulation shows good beam quality (increased longitudinal acceptance)
    - Superior mechanical stability for $\beta<0.6$
  - Decade-old technology (Delayen et al., LINAC 92)
  - Open to Elliptical cavities processing conditions
    - HPR
    - Ultra-clean processing

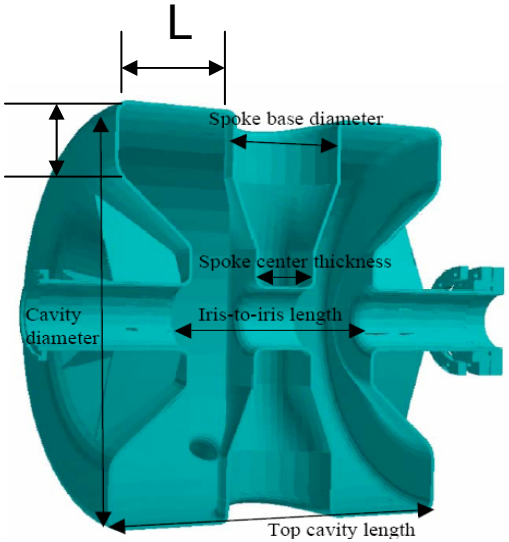

	R/Q			
V\L	50	60	70	80
30	234.19	236.89	238.16	239.8
55	240.67	243.76	246.19	249.14
80	248.41	251.77	256.2	259.61
105	257.27	262.66	267.63	272.24
	Epeak/Eacc			
	50	60	70	80
30	2.86	2.83	2.73	2.69
55	2.83	2.74	2.72	2.66
80	2.84	2.69	2.64	2.62
105	2.69	2.64	2.61	2.55
	Q			
	50	60	70	80
30	1.41E+09	1.44E+09	1.39E+09	1.45E+09
55	1.44E+09	1.50E+09	1.55E+09	1.51E+09
80	1.49E+09	1.53E+09	1.60E+09	1.65E+09
105	1.52E+09	1.58E+09	1.65E+09	1.71E+09
	Bpeak/Eacc			
	50	60	70	80
30	7.06	6.30	5.83	5.35
55	6.86	6.22	5.71	5.23
80	6.65	6.02	5.52	5.08
105	6.50	5.88	5.36	4.87

SC Spoke Resonator R&D (2)

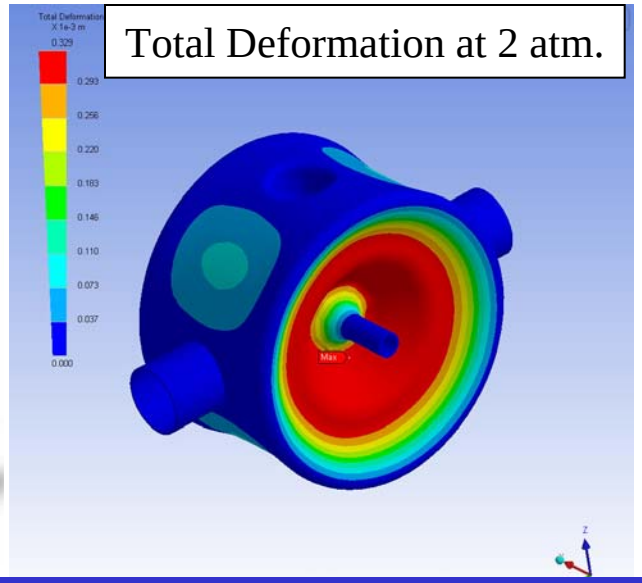

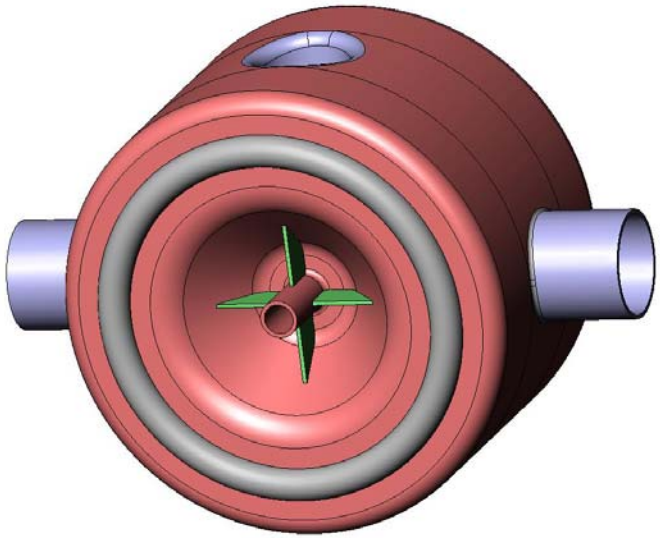

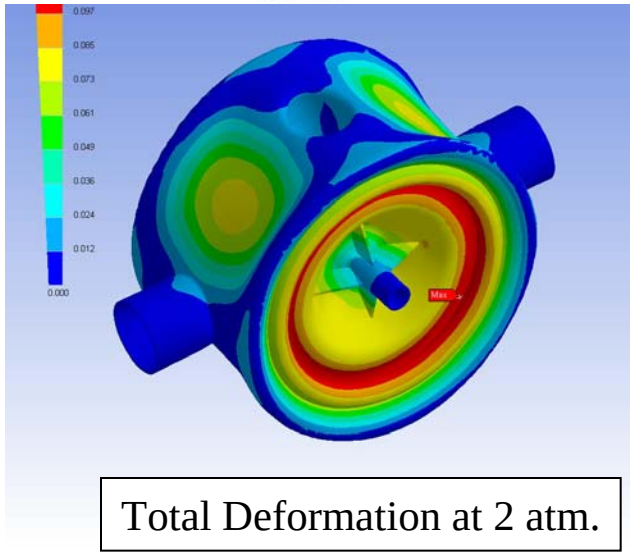

Reinforcement Type	Total Deformation [mm]	Von Mises [MPa]
none	**329**	**352.8**
flat	**283**	**256.0**
tubular	**266**	**254.4**
Flat + gussets	**137**	**65.08**
Tubular + gussets	**109**	**65.85**

SC Spoke Resonator R&D (3)

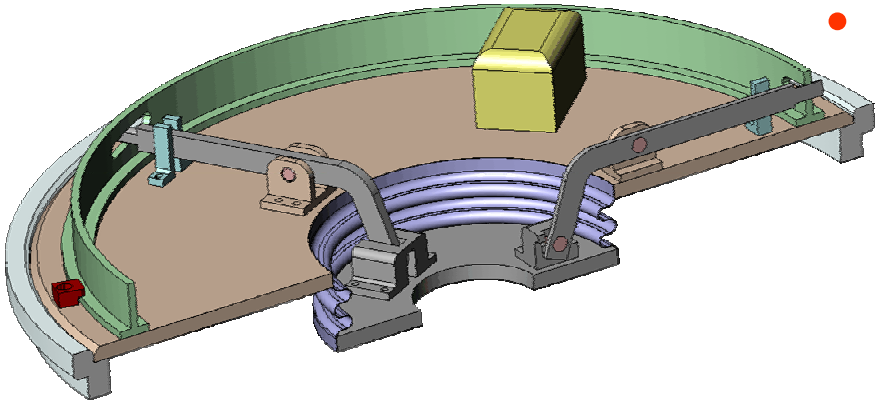

- **Slow Tuning Mechanism**
  - To be prototyped on Al Cavity

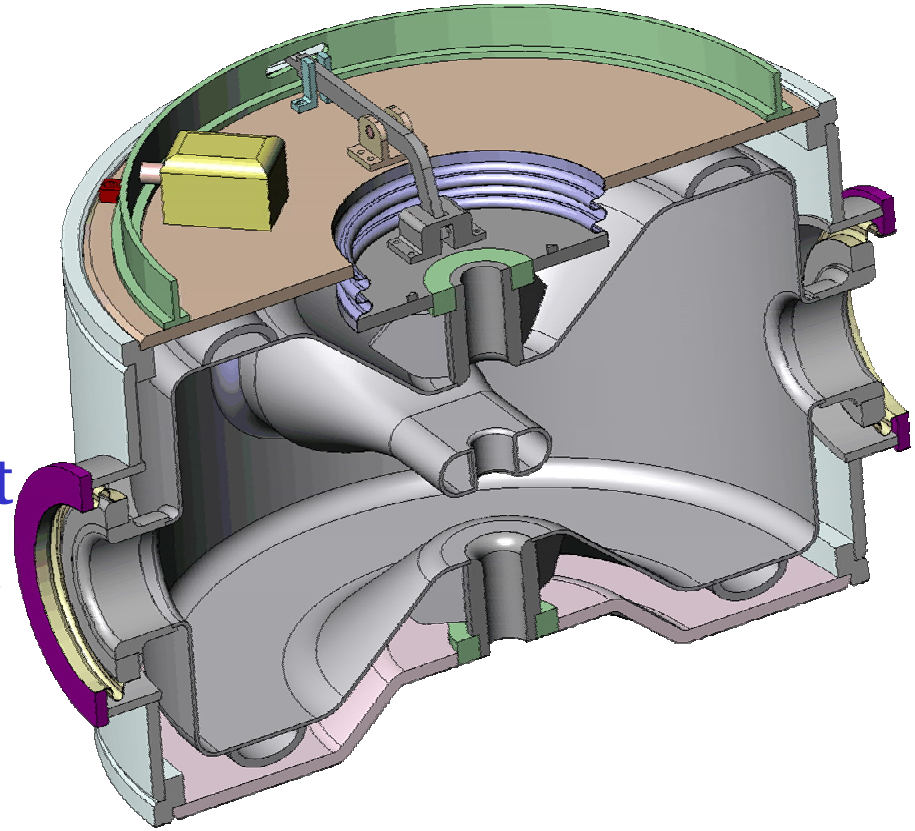

- **2 Prototype SC SSR Cavities under Procurement**
  - 1 “Sole Sourced” to AES. ANL Collaboration
  - 1 Open bid.

Warm-Cold Integration

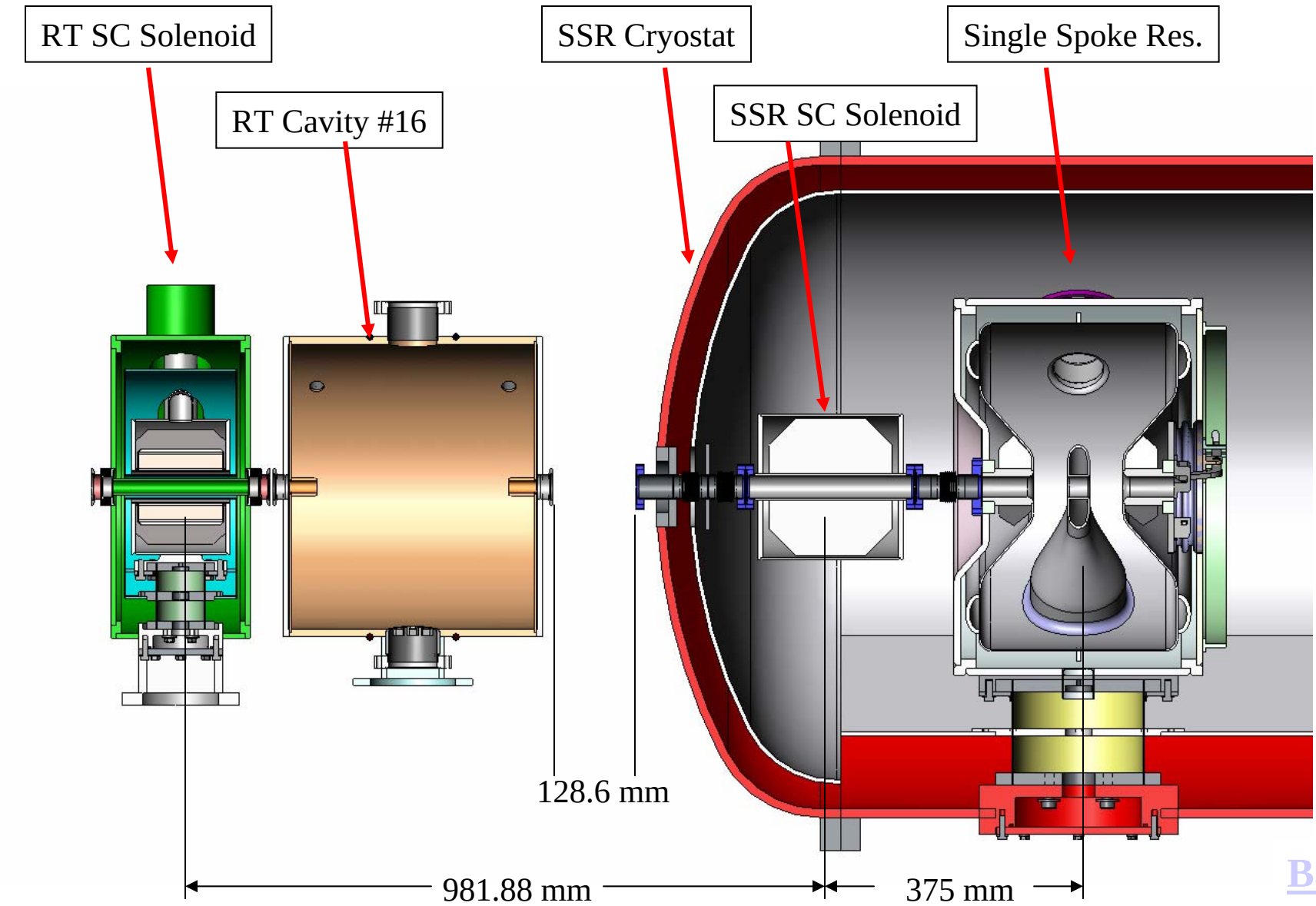

Back

Pulse Transformer in Meson

325 MHz Klystron

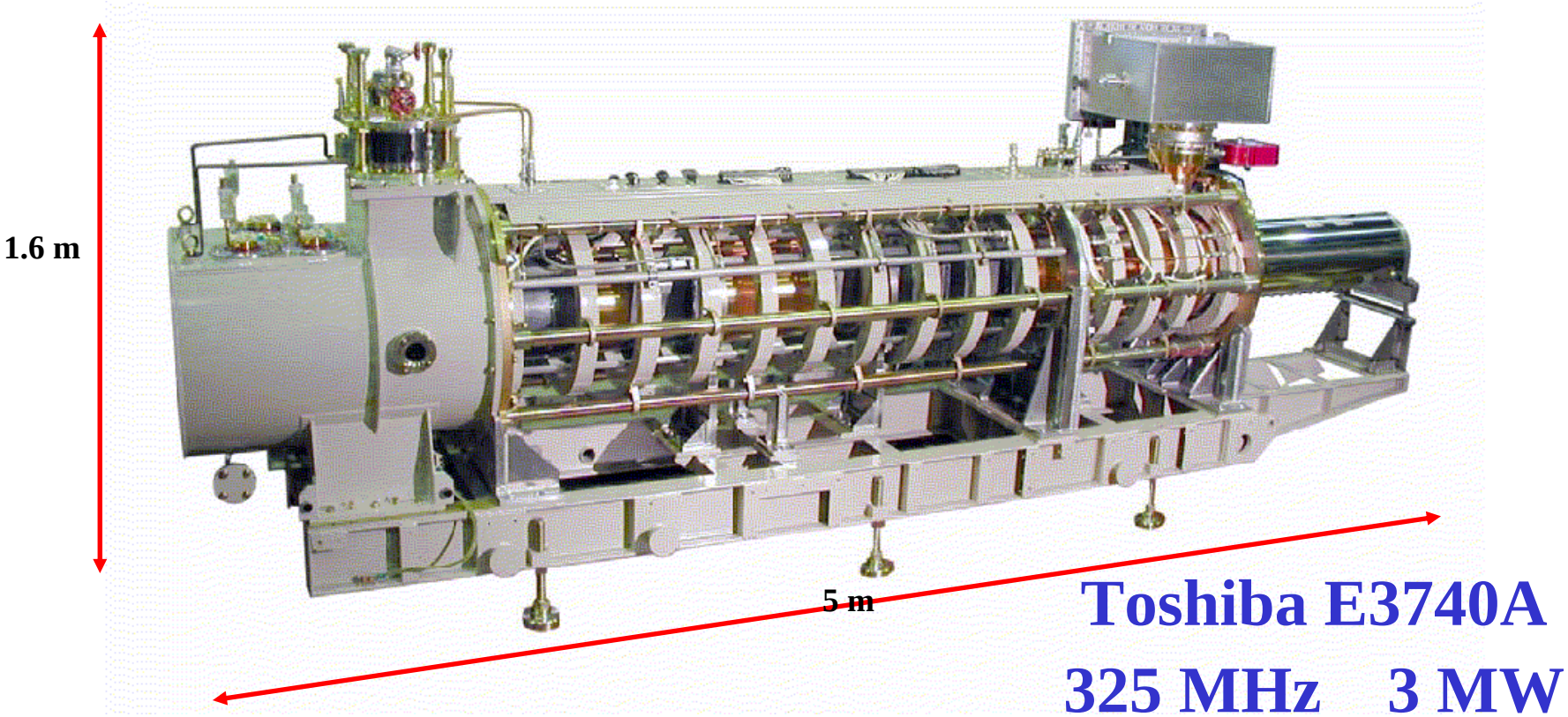

Toshiba E3740A

325 MHz 3 MW

From: Alfred Moretti [mailto:moretti@fnal.gov]
Sent: Tuesday, January 31, 2006 12:18 AM
To: gwf@fnal.gov
Subject: Fwd: Japan visit schedule Jan. 30-Feb. 2

Bill, The tube is great; it was tested to our long pulse length and pulse rates requirements.

325 MHz RF System

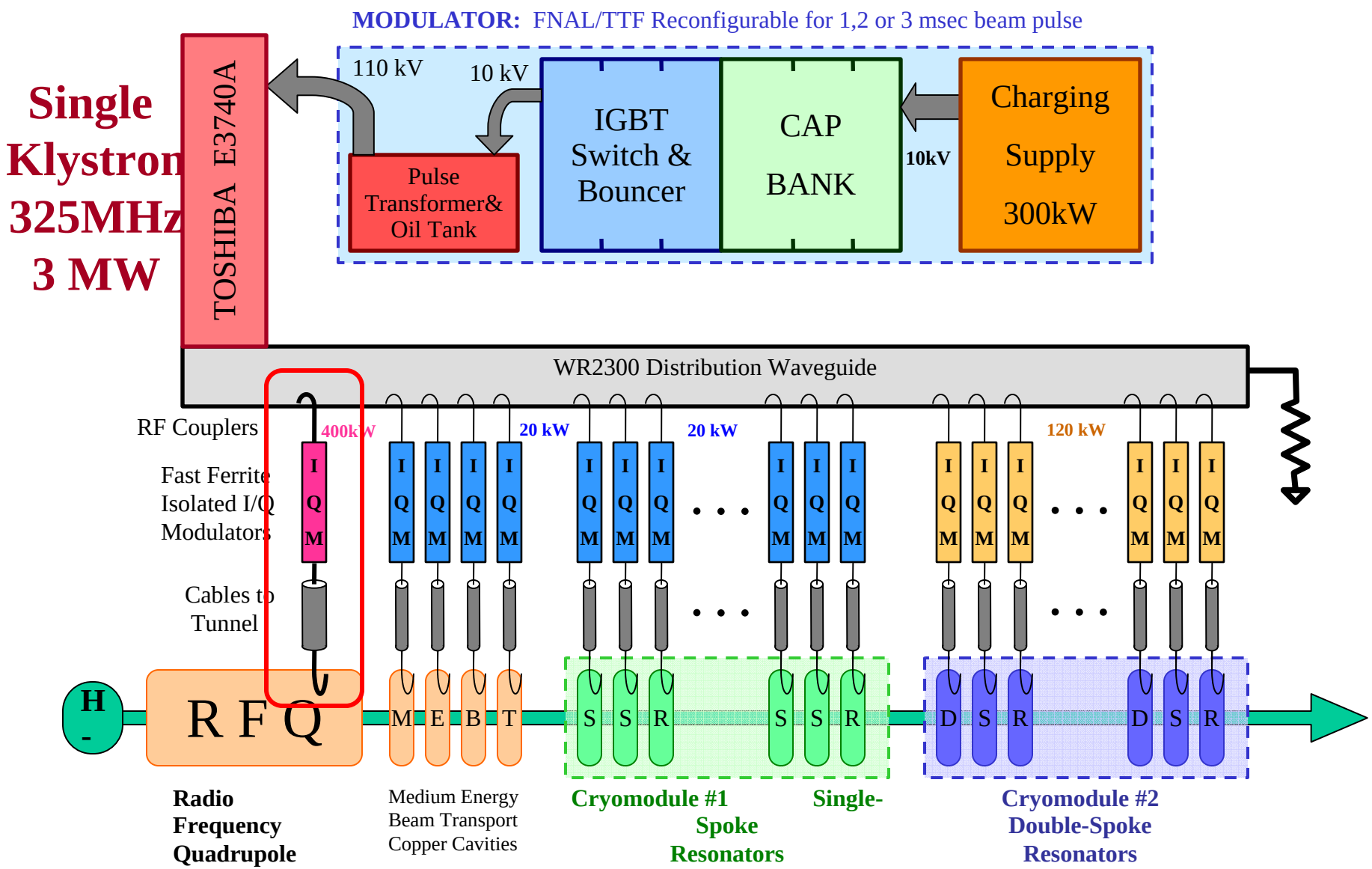

Fast Ferrite Phase Shifter R&D

- **Provides fast, flexible drive to individual cavities of a proton linac, when one is using a TESLA-style RF fanout.** ***(1 klystron feeds 36 cavities)***
- **Also needed if Linac alternates between e and P.**
- **This R&D was started by SNS but dropped due to lack of time. They went to one-klystron-per-cavity which cost them a lot of money ($20M - $60M / GeV).**

Making this technology work is important to the financial feasibility of the 8 GeV Linac.

I/Q modulator box (stripline structure)

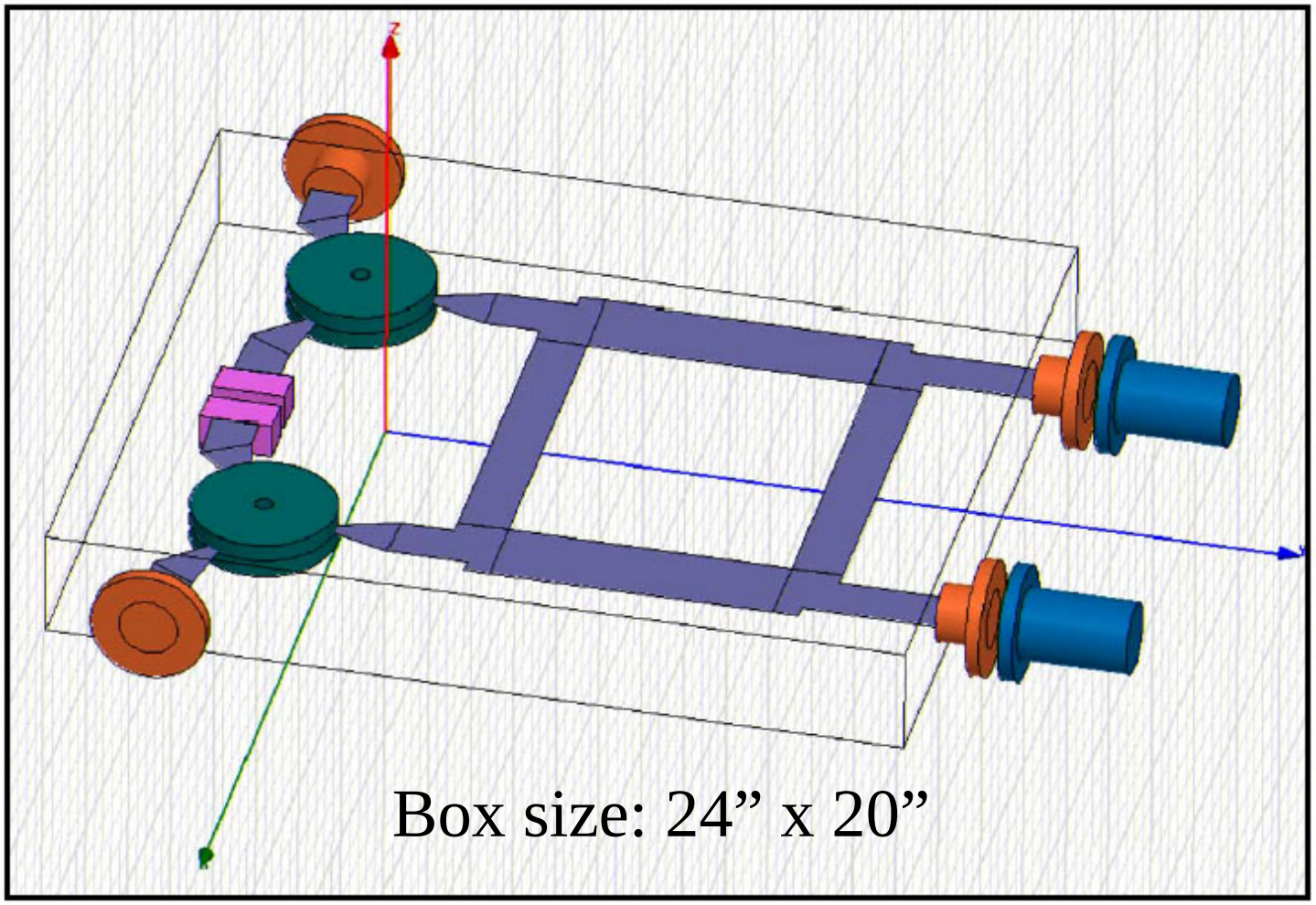

Prototype Circulator

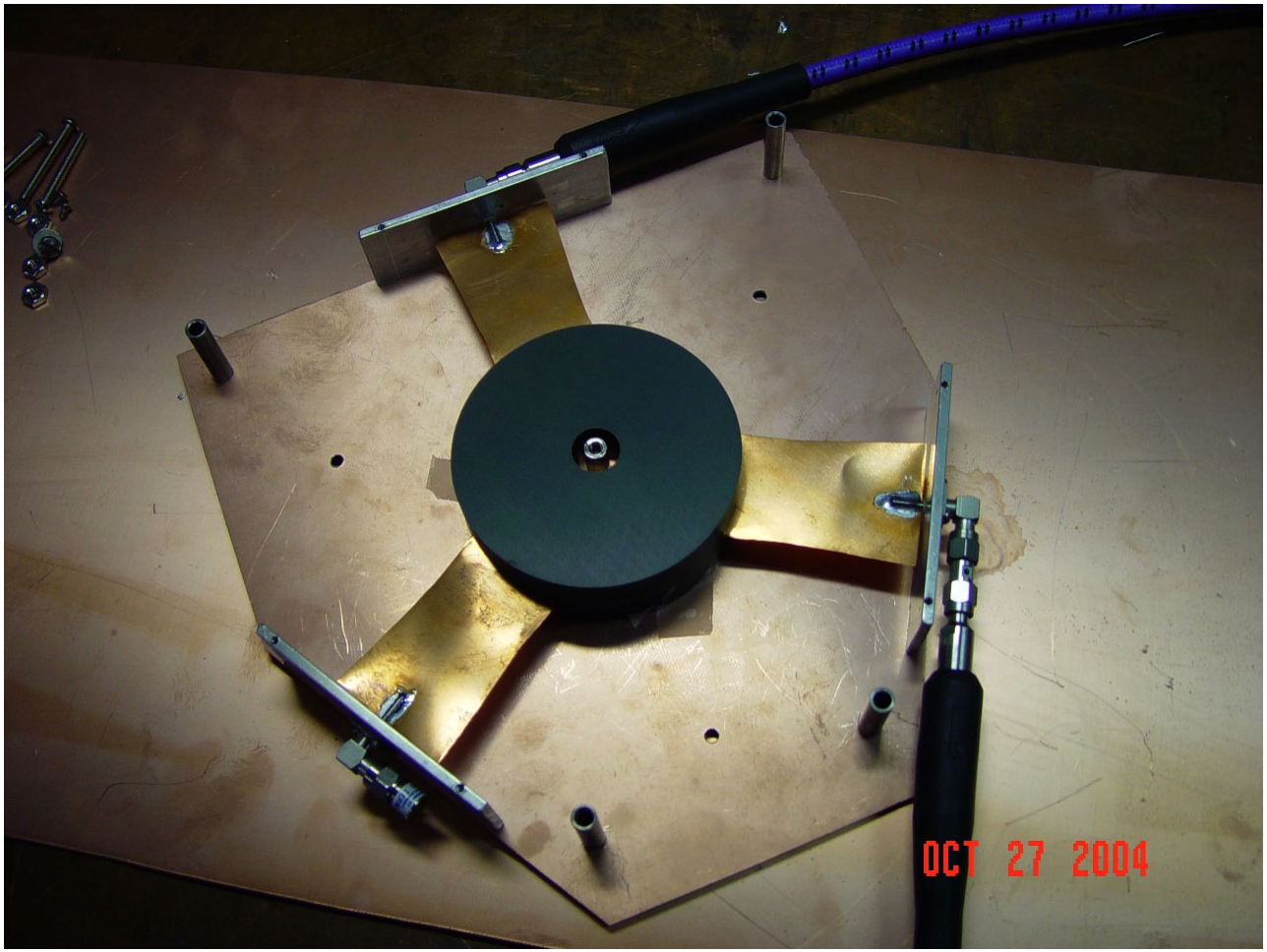

ELECTRONICALLY ADJUSTABLE E-H TUNER (1300 MHz Waveguide)

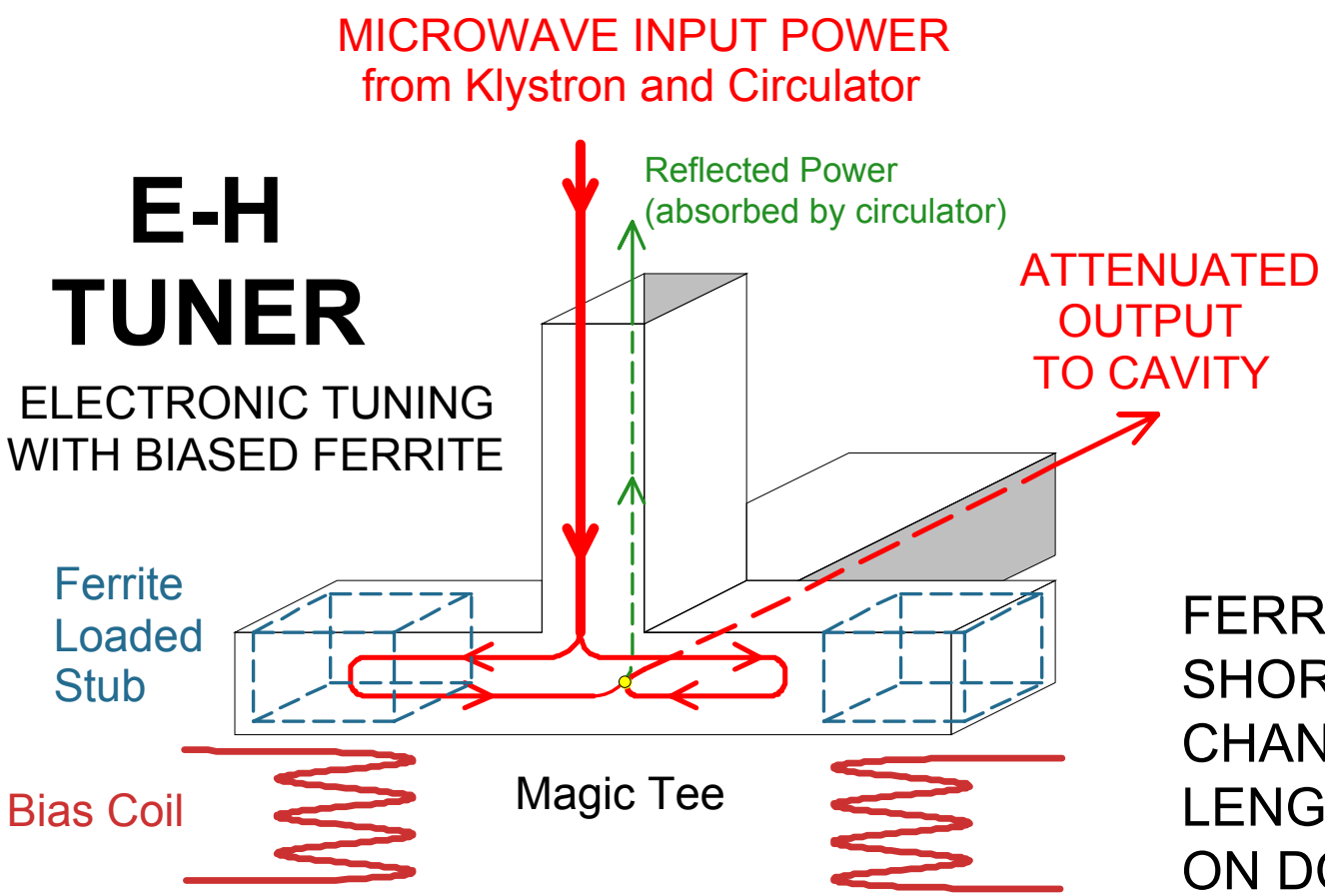

E-H TUNER

ELECTRONIC TUNING
WITH BIASED FERRITE

FERRITE LOADED
SHORTED STUBS
CHANGE ELECTRICAL
LENGTH DEPENDING
ON DC MAGNETIC BIAS.

TWO COILS PROVIDE INDEPENDENT
PHASE AND AMPLITUDE CONTROL OF CAVITIES

Dave Wildman's Coaxial Phase Shifter

- Coax design is preferred at 325MHz
- In-house design tested to 660kW at 1300 MHz
- Tested at 300 kW at Argonne with APS 352MHz Klystron
- Fast coil and flux return should respond in ~50us

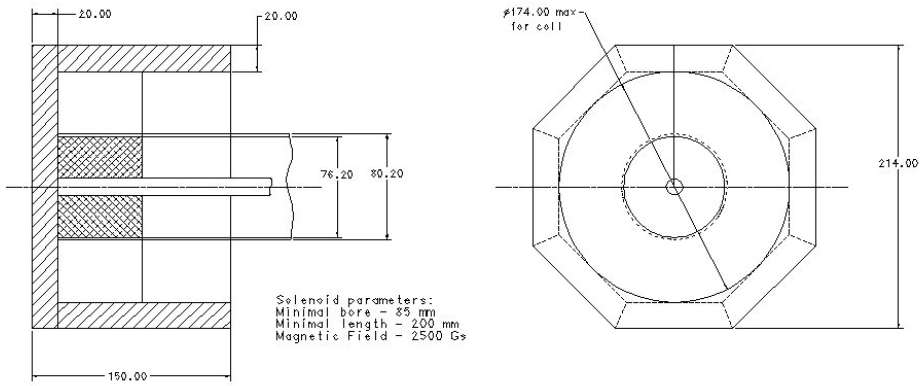

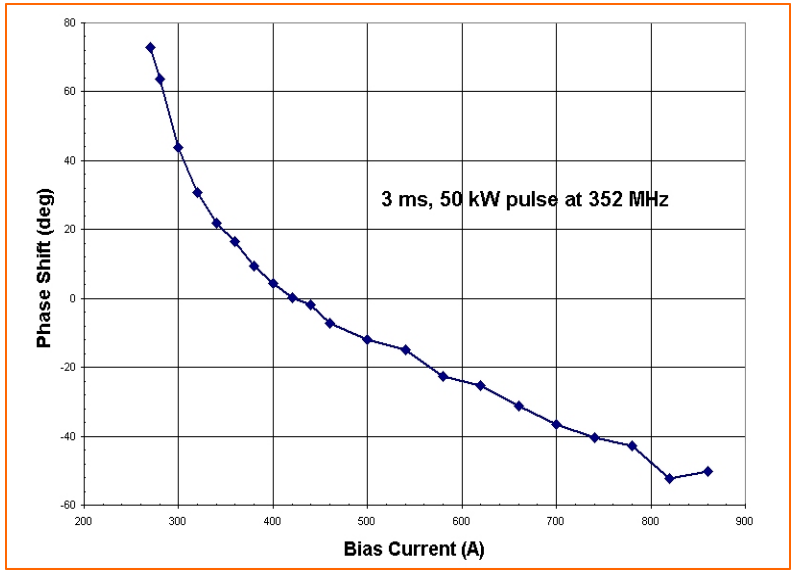

Ding Sun's Hybrid Prototype

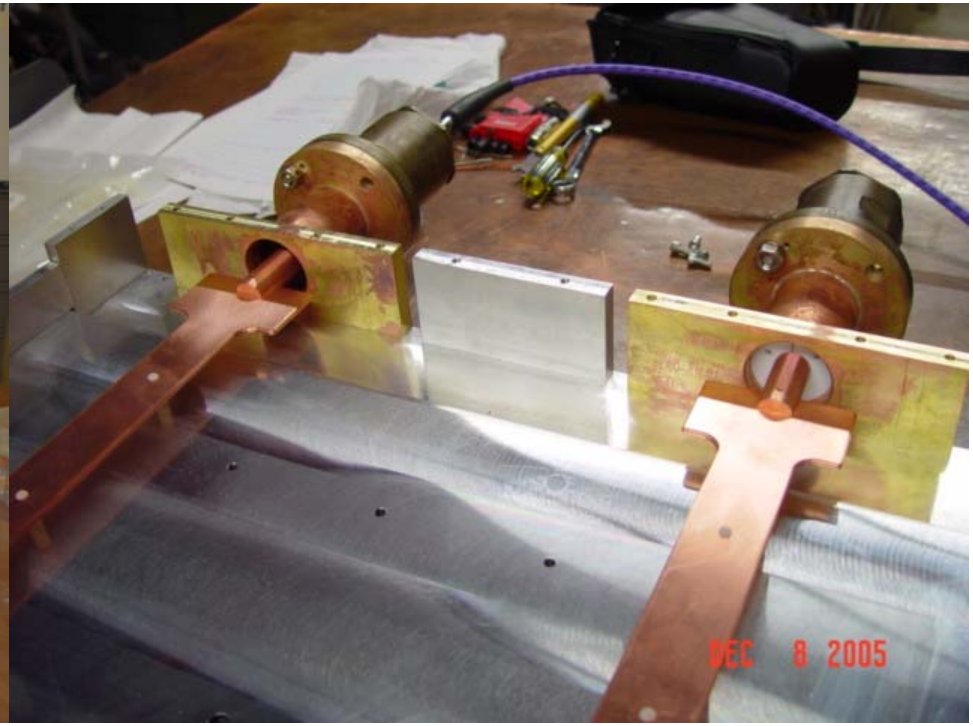

Meson Schedule 2006

- **325 MHz klystron delivery**
  - March 2006
- **Modulator completion**
  - April 2006
- **325 MHz RF power system commissioning**
  - May 2006
- **325 MHz Test Cryostat (now in final design) delivery**
  - August 2006
- **RFQ (now in procurement) delivery and power testing**
  - October 2006
- **2.5 MeV tests**
  - November 2006
- **325 MHz SC spoke resonator test in test cryostat**
  - November 2006

Back

Full Linac Beam Design

- **Effort spearheaded by P.Ostroumov (ANL) & J.P. Carneiro(AD)**

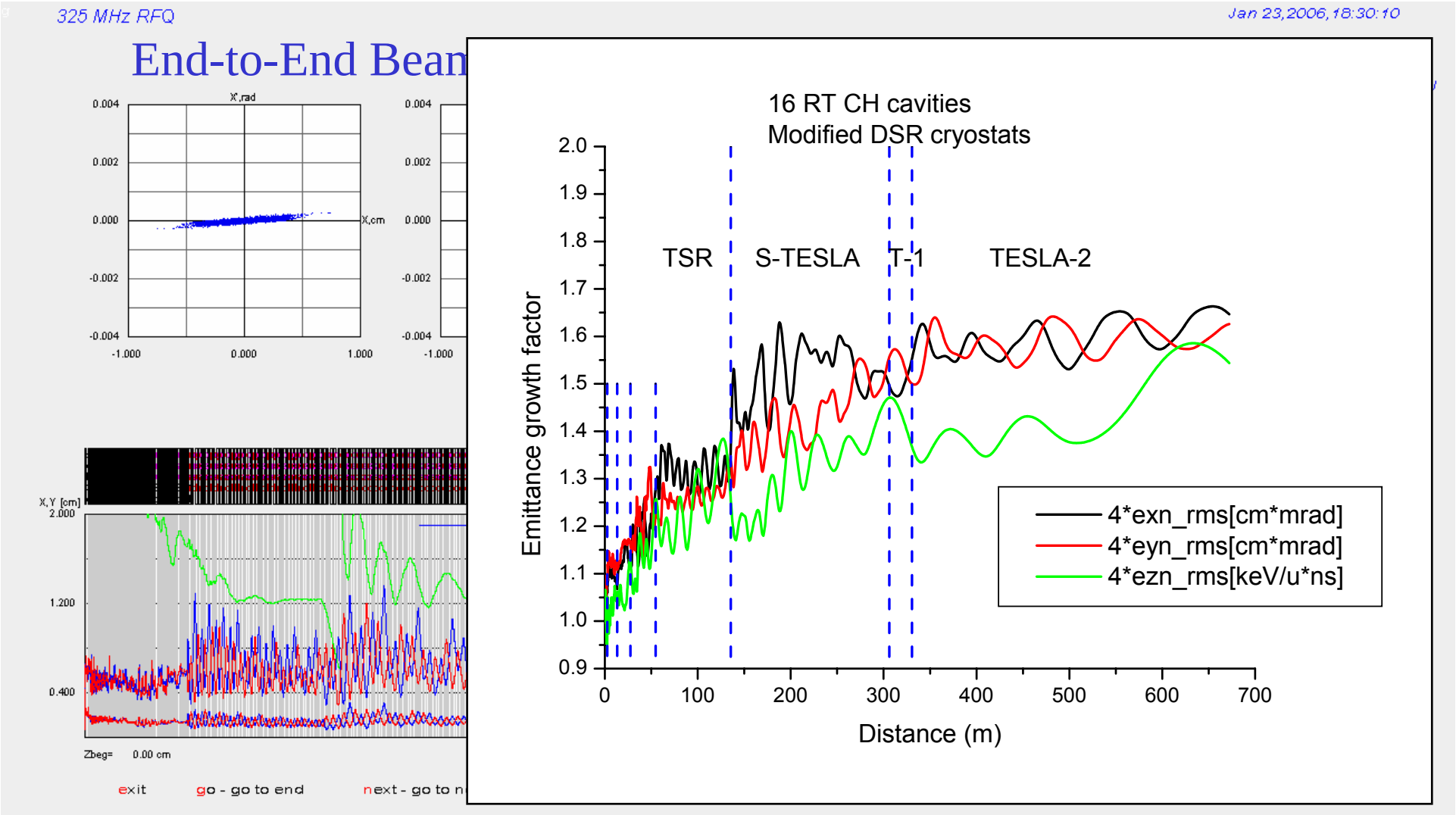

Full Linac Beam Design

- **Beam Elements Mechanical tolerancies/alignments**

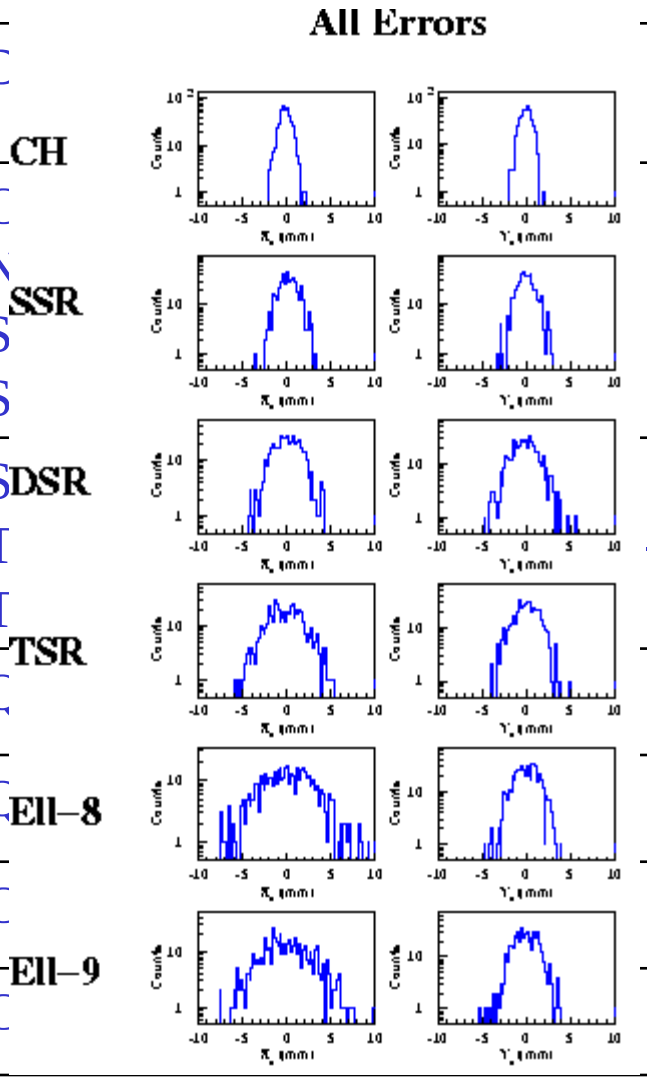

	D		Value	Distribution
1	C N S S		0.5 mm (max.) 0.5 mm (max.) 1.0 mm (max.)	Uniform
2	S T T	– 18 cm	0.15 mm (max.) 0.2 mm (max.)	Uniform
3	C		0.15 mm (max.)	Uniform
4	C		5 mrad (max.)	Uniform
5	C		1.0% (rms)	Gaussian
6	C		1.0° (rms)	Gaussian

← **Max. deviation ~ 2 mm, OK without corrections**

← **Max. deviation ~ 3 mm, may require corrections**

← **Max. deviation ~ 5 mm, corrections are needed**

8 GeV Civil Construction

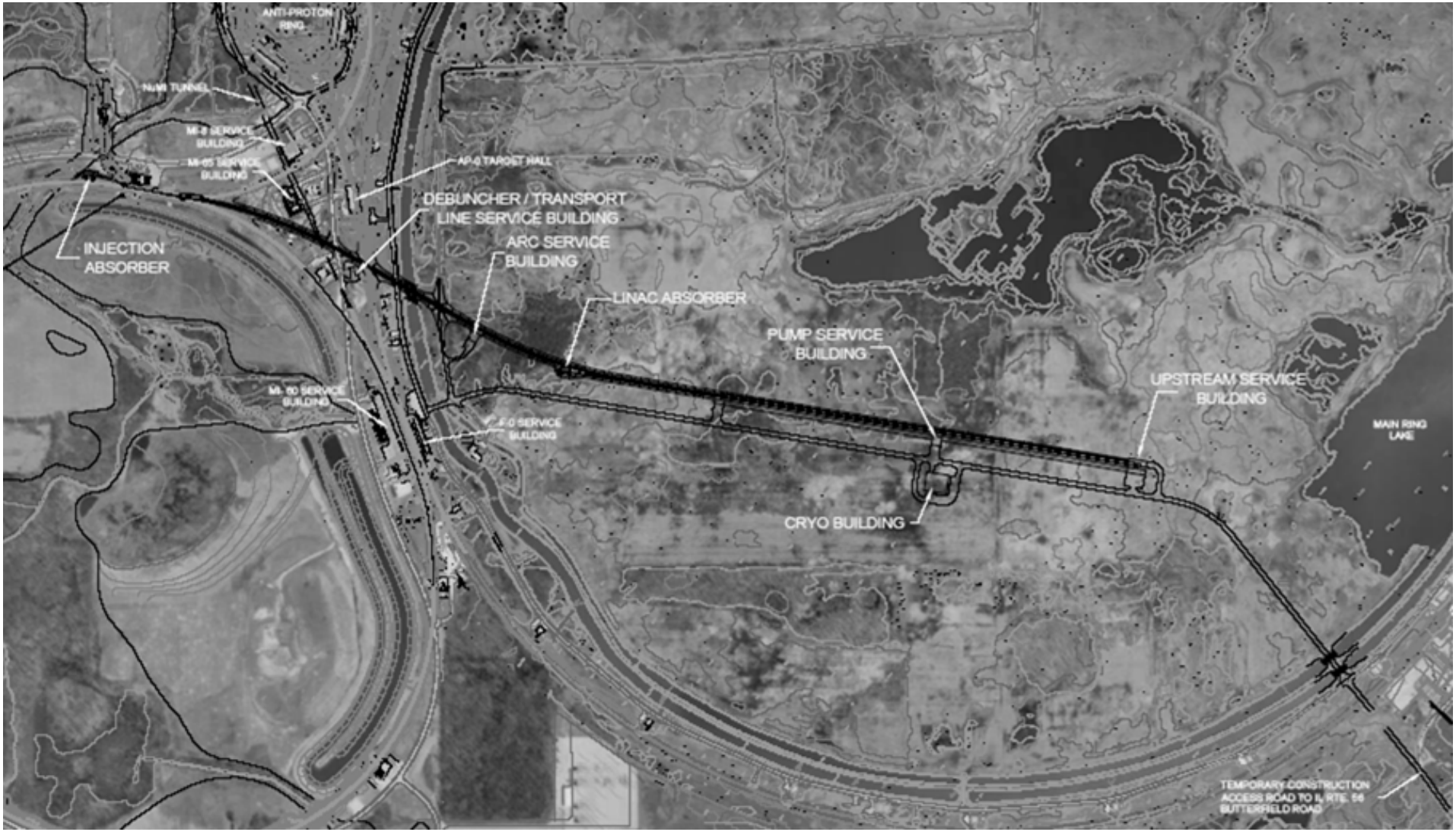

Gallery and Tunnel Cross Section

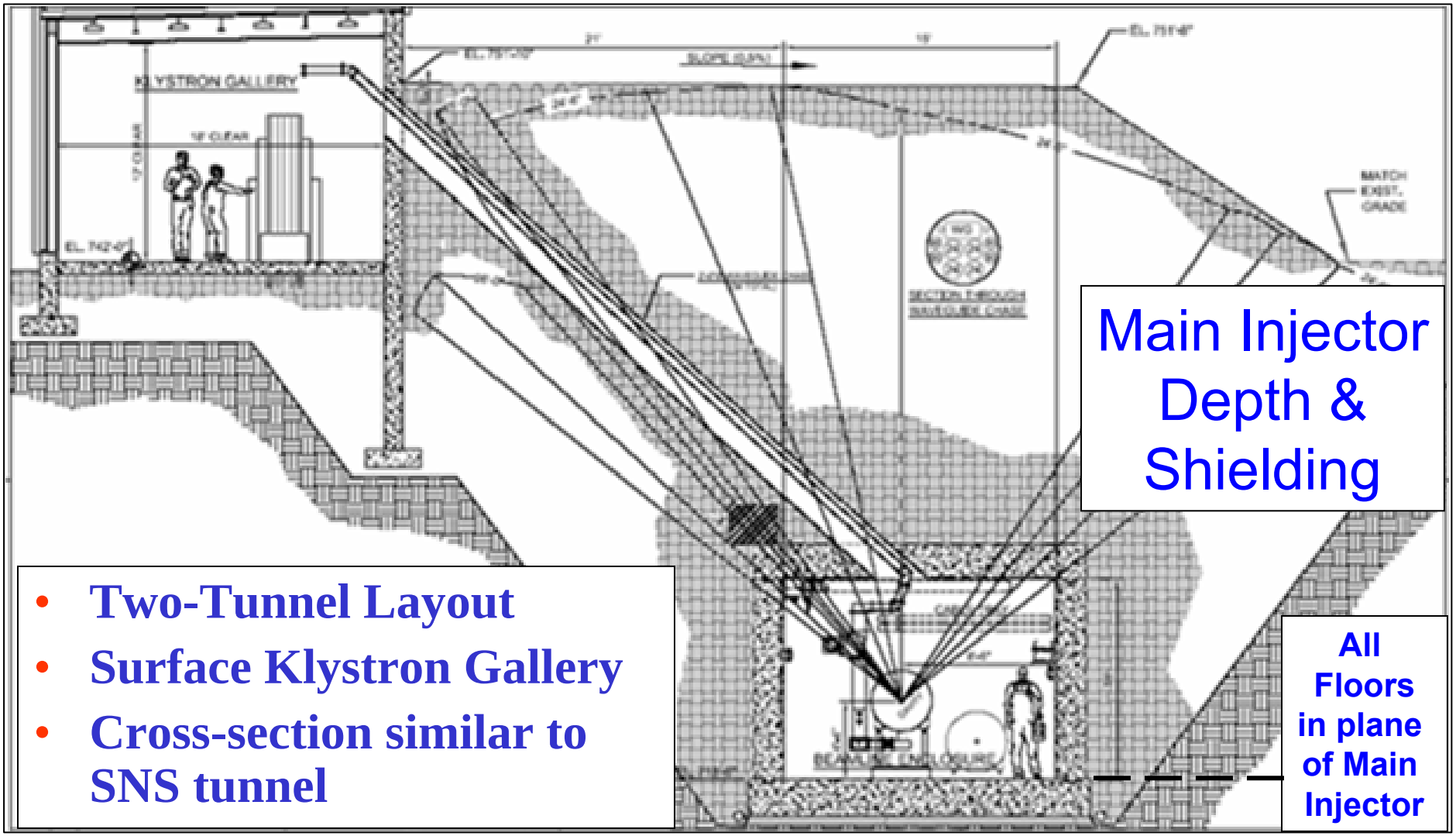

- **Two-Tunnel Layout**
- **Surface Klystron Gallery**
- **Cross-section similar to SNS tunnel**

Conclusion

- **Small but motivated team of people pushing hard to show HINS (PD) feasibility in Meson**
- **Some critical collaborations (ANL, MSU, BNL, LBL) in place and working very well**
- **Most of the PD technical elements in advanced phase of design or prototyping.**

…keep smiling...

Support Slides

MI with Synchrotron. vs. MI with SCL

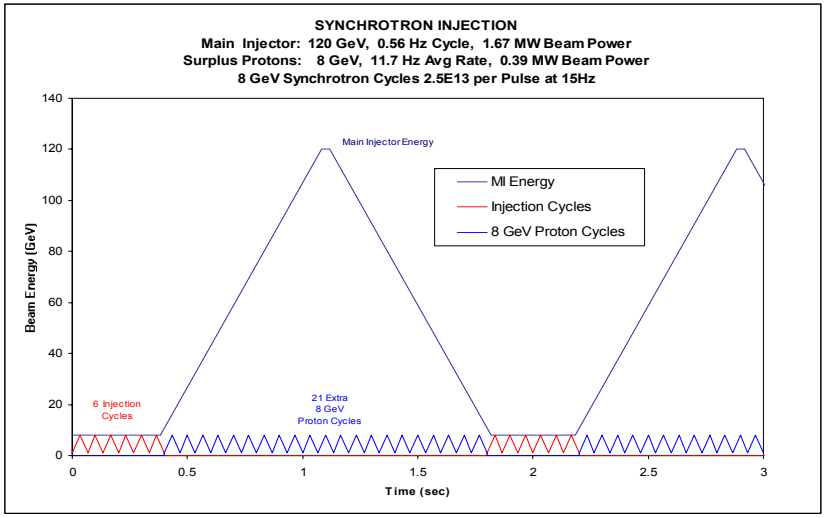

- **MI maintains 2 MW Beam power at lower energy**
  - # of ν not strongly dependent on E
  - Reduces tails at higher ν energies
- **Allow flexible ν Program**

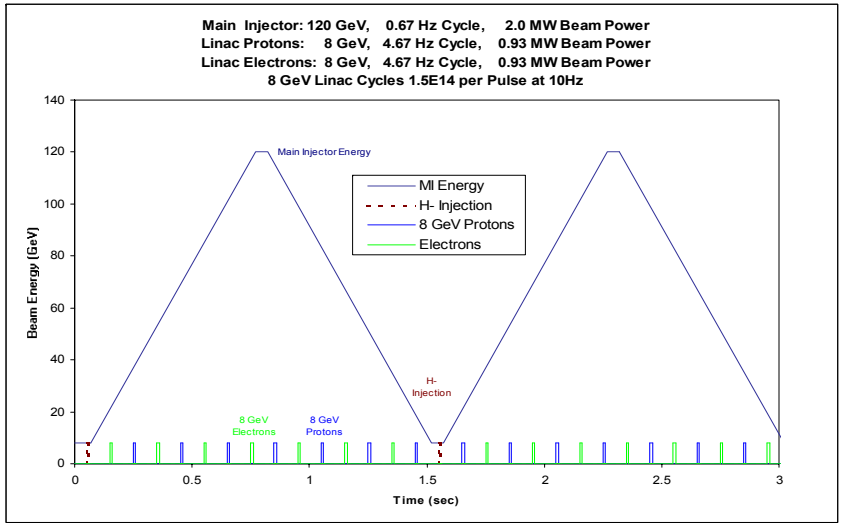

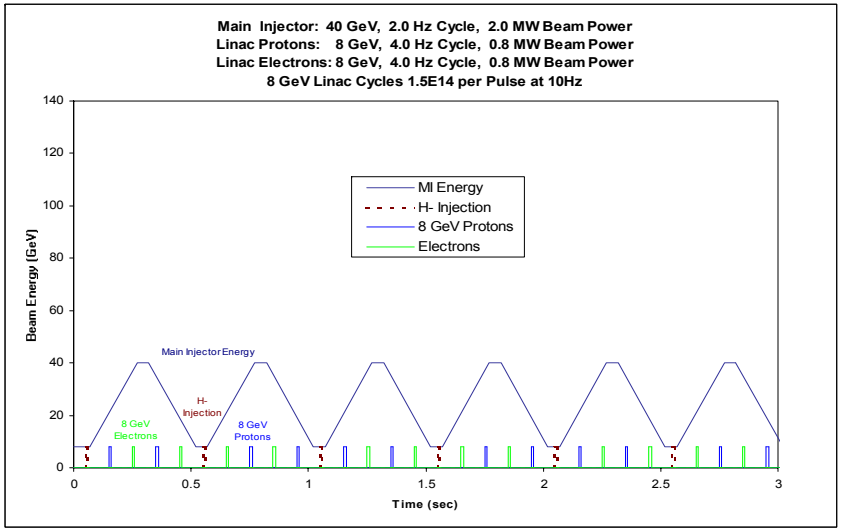

2. Linac Pulse Parameters

Comparison with Other SRF Linacs

	8 GeV Initial	8 GeV {Ultimate}	SNS (Spallation Neutron Source)	TESLA-500 (w/ FEL)	TESLA-800
Linac Energy	8 GeV	8 GeV	1 GeV	500 GeV	800 GeV
Particle Type	H^-, e+, or e^-	H^-, e+, or e^-	H^-	e+, e^-	e+, e^-
Beam Power	0.5 MW	2 MW	1.56 MW	22.6 MW	34 MW
AC Power (incl. warm FE)	5.5 MW	13 MW	~15 MW	97 MW	150 MW
Beam Pulse Width	3 msec	1 msec	1 msec	0.95 msec	0.86 msec
Beam Current(avg. in pulse)	8.6 mA	26 mA	26 mA	9.5 mA	12.7 mA
Pulse Rate	2.5 Hz	10 Hz	60 Hz	5(10) Hz	4 Hz
# Superconducting Cavities	384	384	81	21024	21852 / 2
# Cryomodules	48	48	23	1752	1821
# Klystrons	12	33	93	584	1240
# Cavities per Klystron(typ)	36	12	1	36	18
Cavity Surface Fields (max)	52 MV/m	52 MV/m	35 MV/m	46.8 MV/m	70 MV/m
Accel. Gradient (max)	25 MV/m	25 MV/m	16 MV/m	23.4 MV/m	35 MV/m
Linac Active Length	614 m	614 m	258 m	22 km	22 km

5. Spokes-to-Elliptical Transition

1. **Preserving two technical options (110-400 MeV):**
   1. 325 MHz triple-spoke Resonators **(BASELINE)**
   2. 1300 MHz Elliptical Cavities
2. **The tradeoffs have been extensively discussed for the Rare Isotope Accelerator (RIA).**
3. **Our Decision Will be based on:**
   1. Accelerator Physics
   2. Cost
   3. Collaboration

Proton Driver Information

Project Site:

http://protondriver.fnal.gov

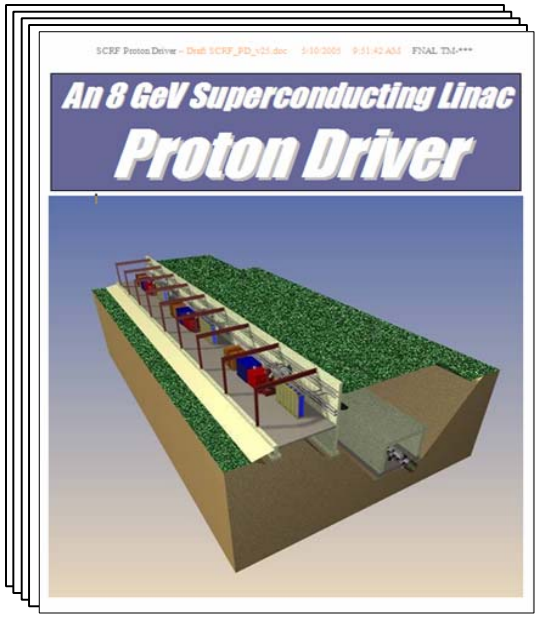

Design Study (Draft, 215 pg.) ➔

http://protondriver.fnal.gov/SCRF_PD_V56.doc

Director's Review:

http://www.fnal.gov/directorate/DirReviews/Dir'sRev_TechnicalReviewoftheProtonDriver_0315.html

Phase Shifter High Power Test

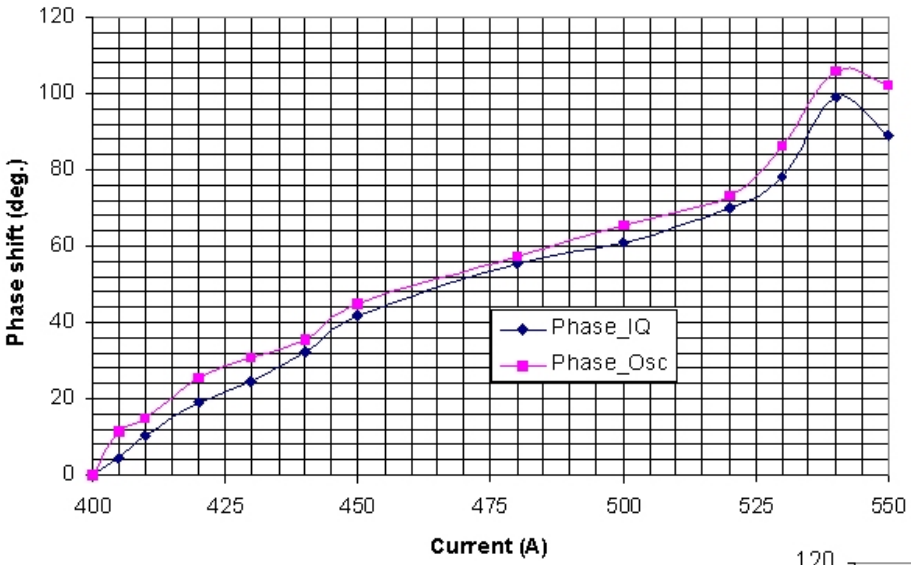

Two methods of phase measurements:

1. Oscilloscope measurements
2. Using available IQ modulator

Available phase zone is limited by sparking that develops near the resonance frequencies

SF_6 added

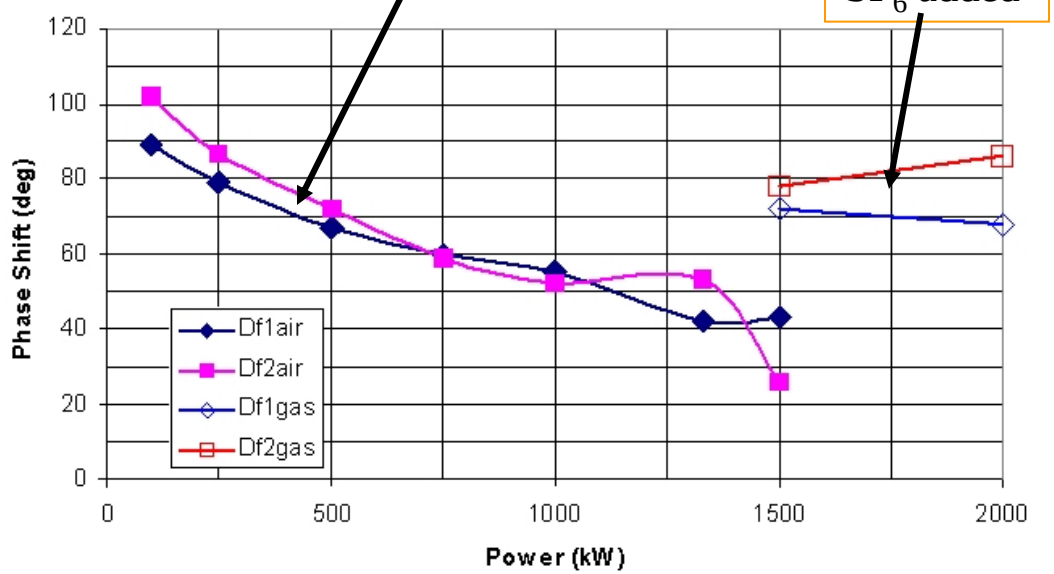

Max Power - 2000 kW (req. 600 kW)

Phase shift - ~ 80° (req. 90°)