Neutrinos

R. Rameika

6th ANL-UC-FNAL Collaboration Meeting

October 12, 2009

ANL-FNAL Collaboration on Neutrinos

- NuMI Program
  - MINOS
  - NOvA

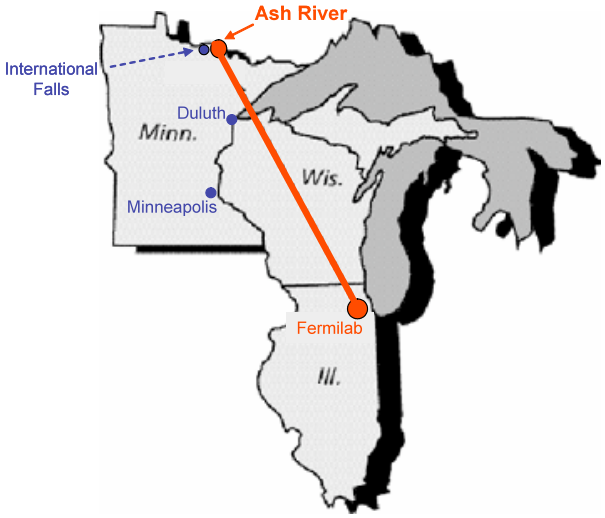

ANL Responsibilities on Near Detector
Scintillator and Front end electronics

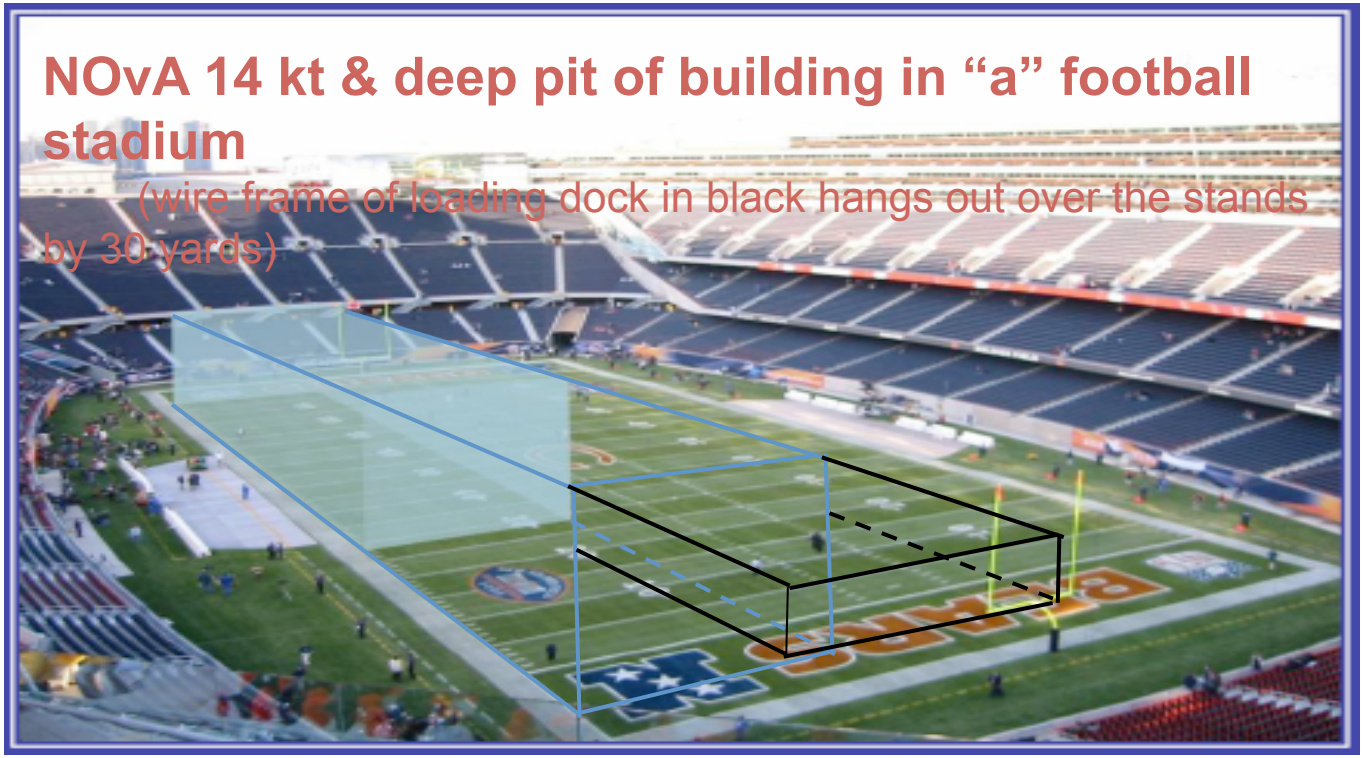

Start data taking with full detector in 2013 with 6×10^{20} POT/year

Run 3 years neutrino and 3 years anti-neutrino

All goes well – significant data taking complete in 2019-2020

Learning how to build the detector at ANL

Extrude it, move it, glue it, lift it…..

LBNE

- DOE Project to construct a new Long Baseline Neutrino experiment
- CD-0 documentation has been prepared and is working its way through the system
- Goal is to reach CD-1 by end of 2010
  - Evaluation of alternatives : source, far site, technology, ….
    - Working model : **Fermilab to DUSEL, water cerenkov and liquid argon detectors** being designed
    - Cost estimates

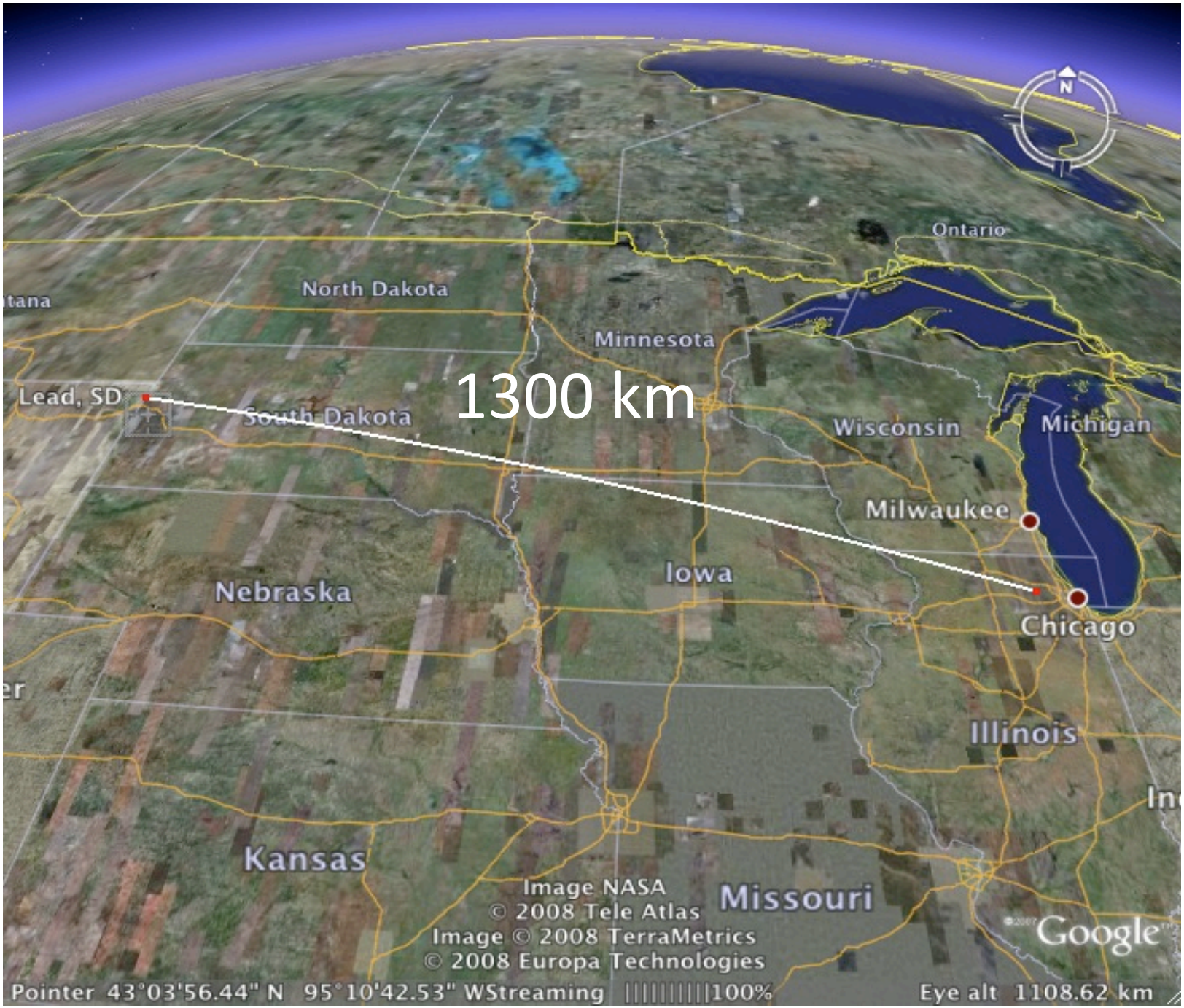
1300 km
Lead, SD
North Dakota
Minnesota
South Dakota
Ontario
Wisconsin
Michigan
Milwaukee
Chicago
Iowa
Nebraska
Illinois
Kansas
Missouri
Image NASA
© 2008 Tele Atlas
Image © 2008 TerraMetrics
© 2008 Europa Technologies
Google
Pointer 43°03'56.44" N 95°10'42.53" WStreaming 100%
Eye alt 1108.62 km

Neutrino Beam Facility – Primary Beam

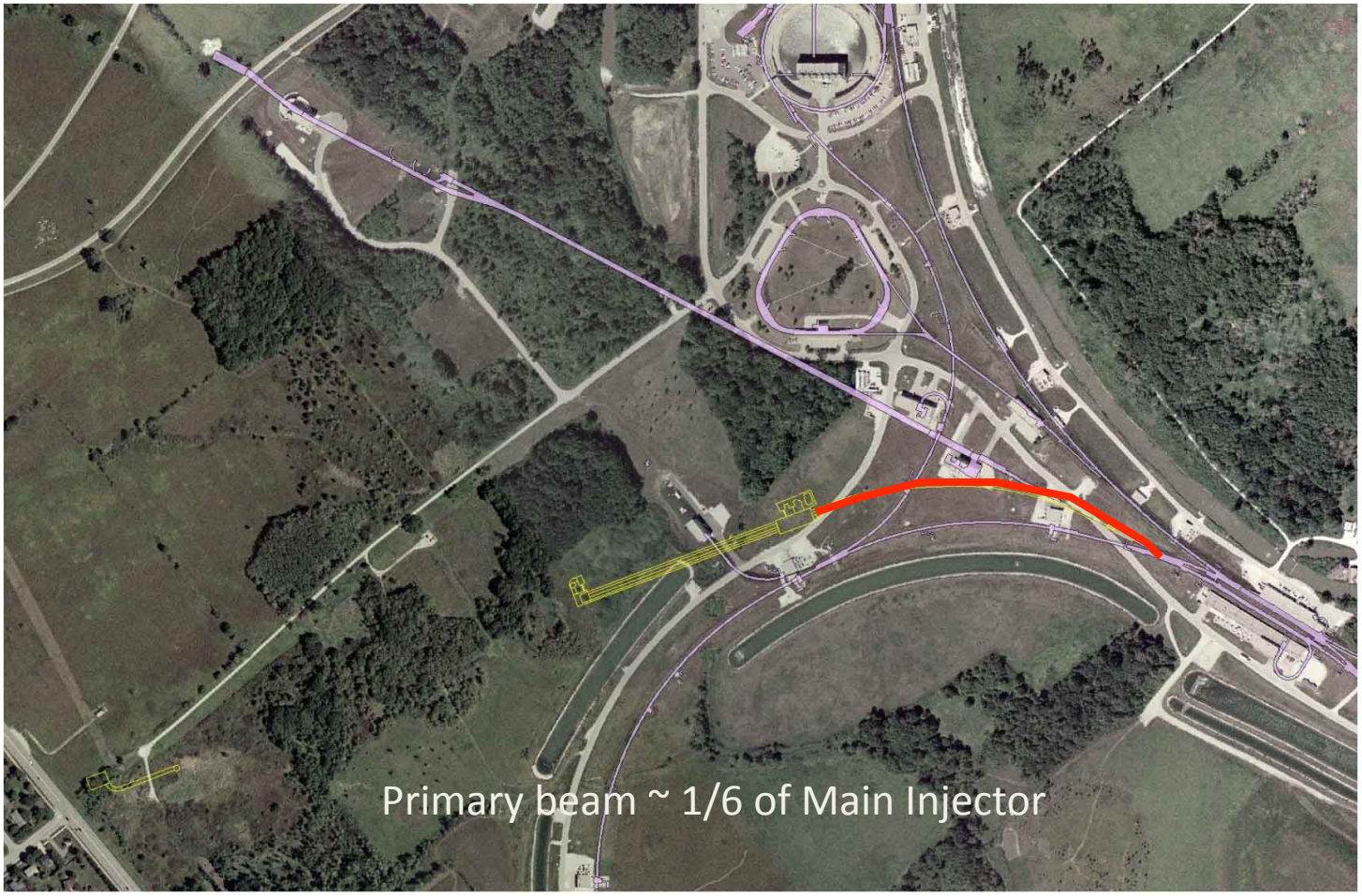

ν Beam Facility : Target Hall + Decay Pipe + Absorber + Near Hall

4850 Level Conceptual Layout

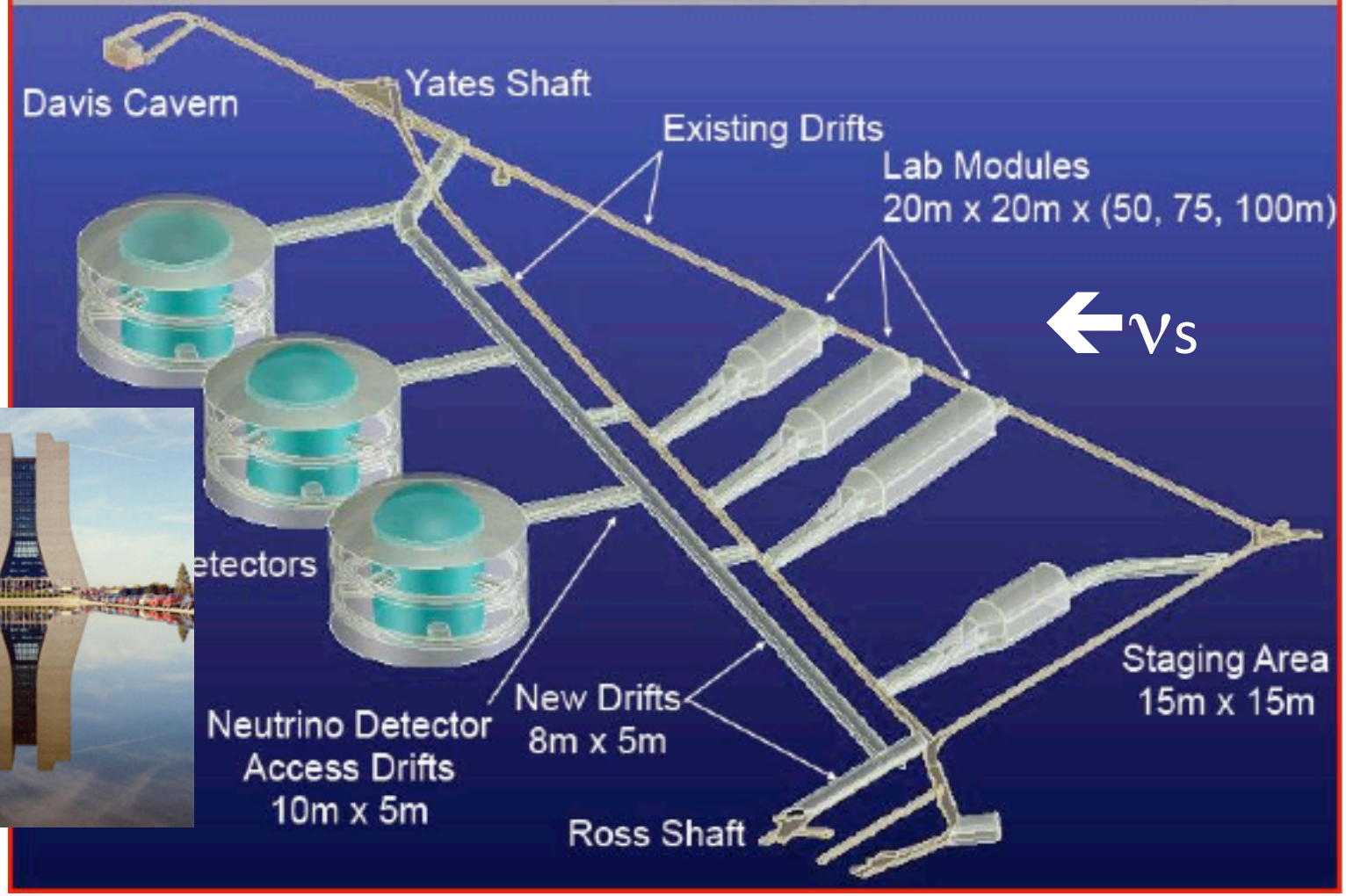

Fermilab vision :The Intensity Frontier with Project X:

Great flexibility toward a very high power facility while simultaneously advancing energy-frontier accelerator technology.

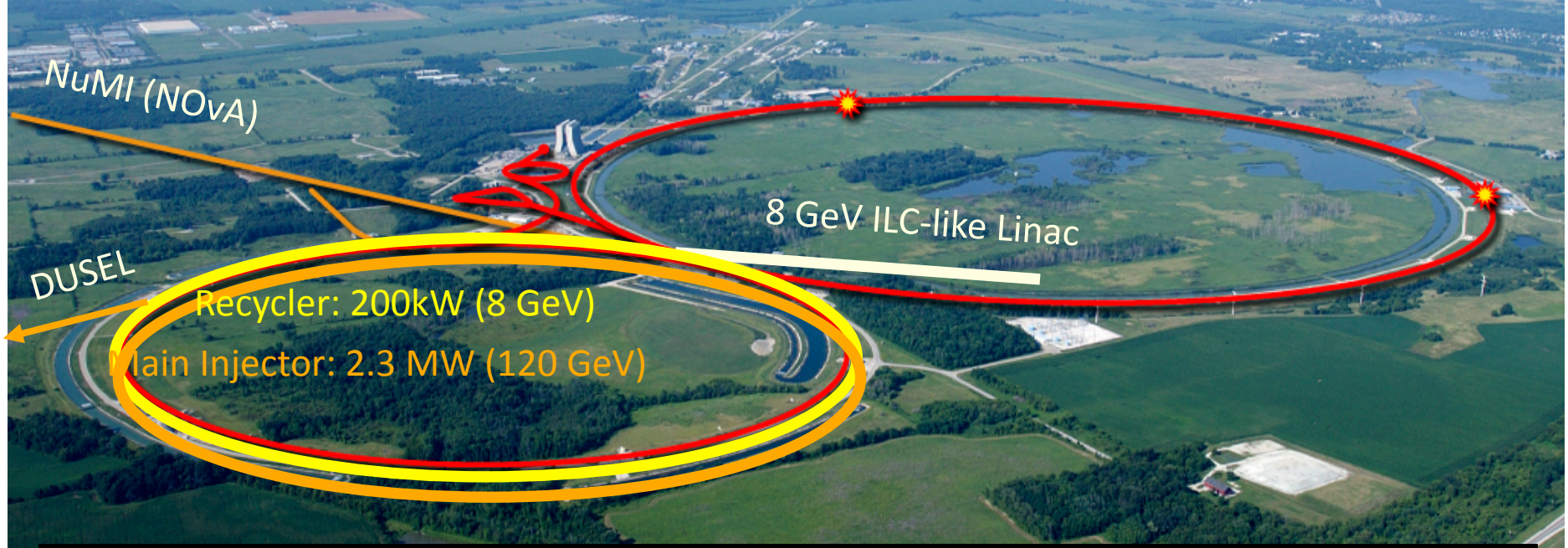

Project X = 8 GeV ILC-like Linac
+ Recycler
+ Main Injector

National Project with International Collaboration

Proposal for a Pre-conceptual study of a 2MW target for the LBNE beam

January 26, 2009

Jim Bailey
Jim Grudzinski
Meimei Li
Nuclear Engineering Division / Argonne National Laboratory

Work Scope

This proposal describes a scoping study to lay the groundwork for continued development of a target for an eventual beam to DUSEL. The intent of this work is to develop preliminary design concepts to show feasibility of constructing such a high power target and to then identify those areas requiring more detailed future study. A pre-conceptual design of a 2MW target has been studied at a preliminary stage and is documented in NuMI-NOTE-BEAM-1100 and is referred to here as the IHEP study. The IHEP study identified possible issues in the cooling system that may require an alternative design due to the possibility of hydraulic shock in the cooling system. The study suggested the possibility using entrained gas to solve the shock problem.

The scope of this work is then a continuation of the above study. Due to the various unknowns, the planned study has multiple paths such that the results at any step dictate the subsequent step. The planned path for this development is best described with a decision tree which is described in what follows and in is illustrated by the flowchart in figure 1.

Neutrino Beamline from Fermilab to Homestake Mine

5th ANL-UC-FNAL Collaboration Meeting
Monday, Feb. 2, 2009 at Argonne

Mike Martens, Fermilab

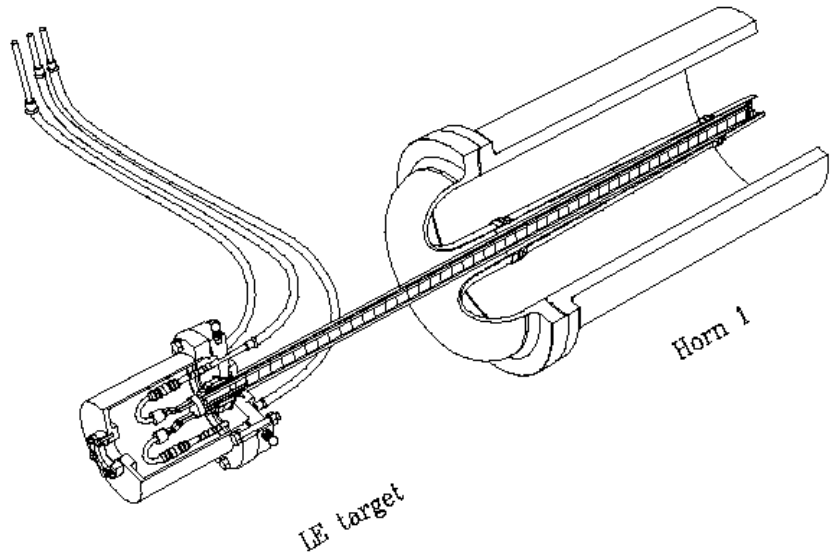

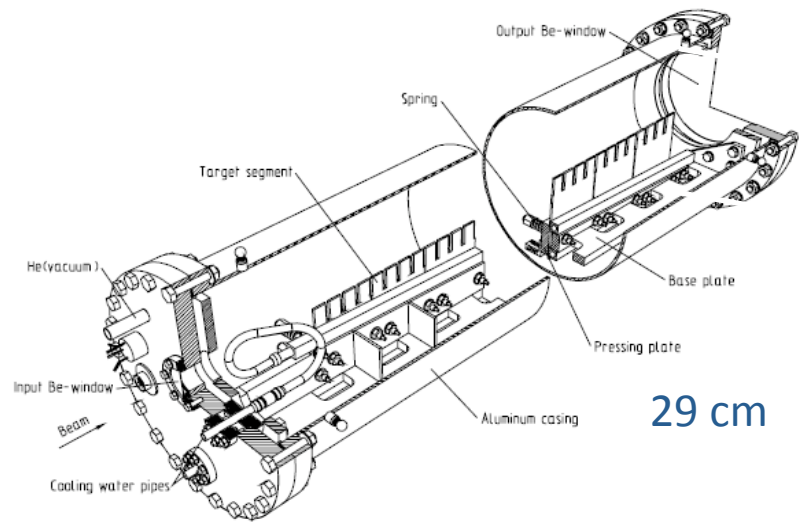

MINOS 400 kW
LE Target OD = 30 mm
Horn ID = 18 mm @ Neck

NOνA 700 kW
ME Target
External to Horn

IHEP 2 MW
Conceptual Design
Needs to fit within neck

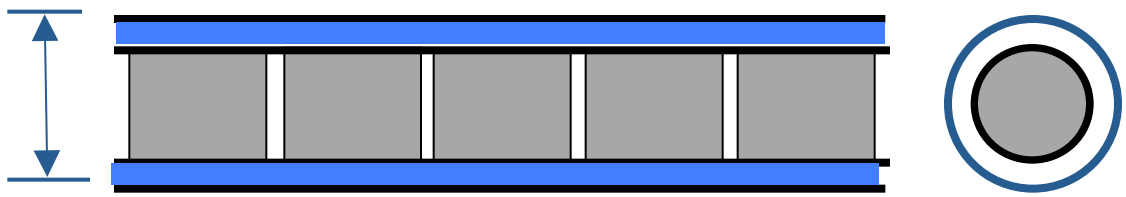

~25 mm

Annular channel for water cooling

Target material? Graphite? Carbon Composite? (BNL working this.)
Cooling? Can we get adequate cooling? Water cooling OK? How to fit within the Horn?

Argonne NATIONAL LABORATORY

... for a brighter future

Review of Irradiation Effects in Graphite for Fermi Target Application - Preliminary Results

Meimei Li

Prepared for the Meeting at Fermi National Laboratory

September 1, 2009

U.S. Department of Energy

UChicago Argonne LLC

Office of Science
U.S. DEPARTMENT OF ENERGY

A U.S. Department of Energy laboratory managed by UChicago Argonne, LLC

Argonne NATIONAL LABORATORY

... for a brighter future

High Power Neutrino Target

Development and Analysis During Fiscal Year 2009 and 2010 for Fermi National Accelerator Laboratory

Task 1 Water Hammer Analysis

September 1, 2009

Jim Bailey

U.S. Department of Energy

UChicago Argonne LLC

Office of Science
U.S. DEPARTMENT OF ENERGY

A U.S. Department of Energy laboratory managed by UChicago Argonne, LLC

High Power Neutrino Target-Review of Analysis Plan

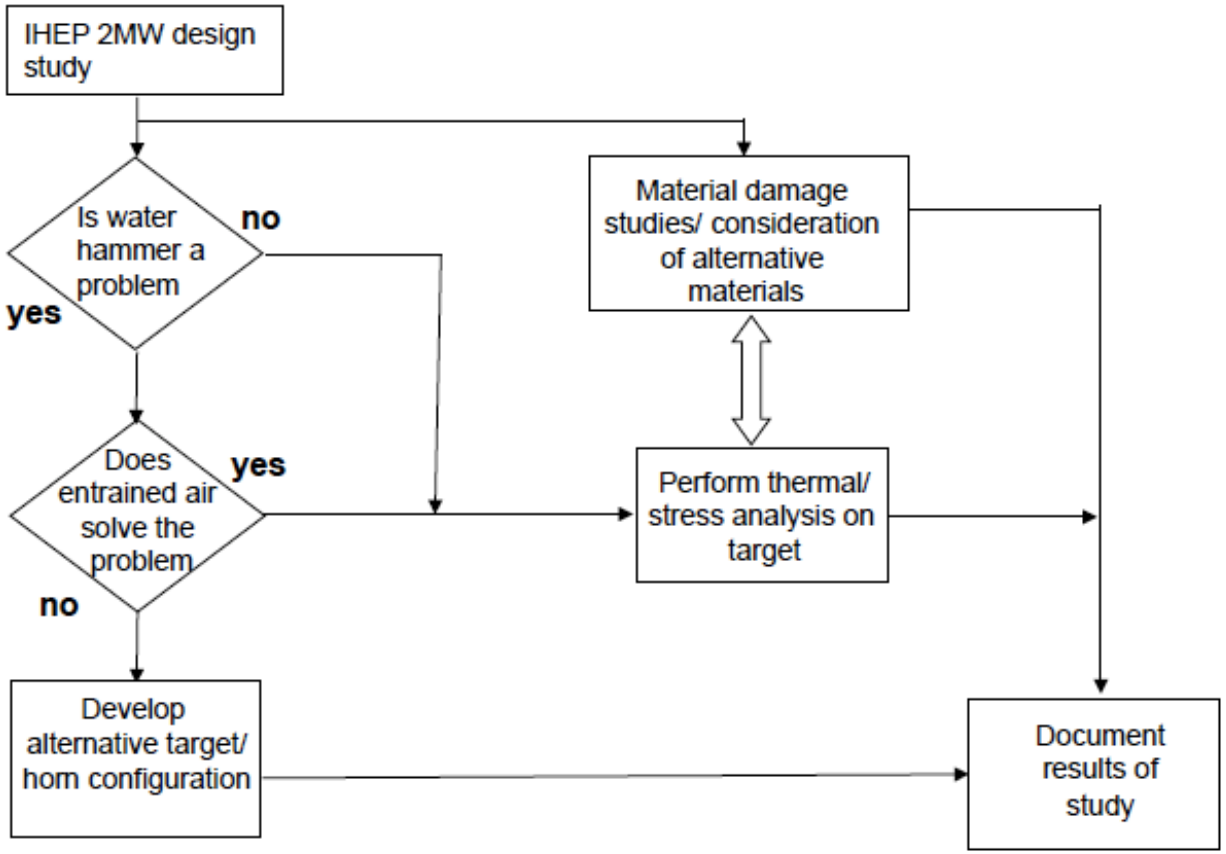

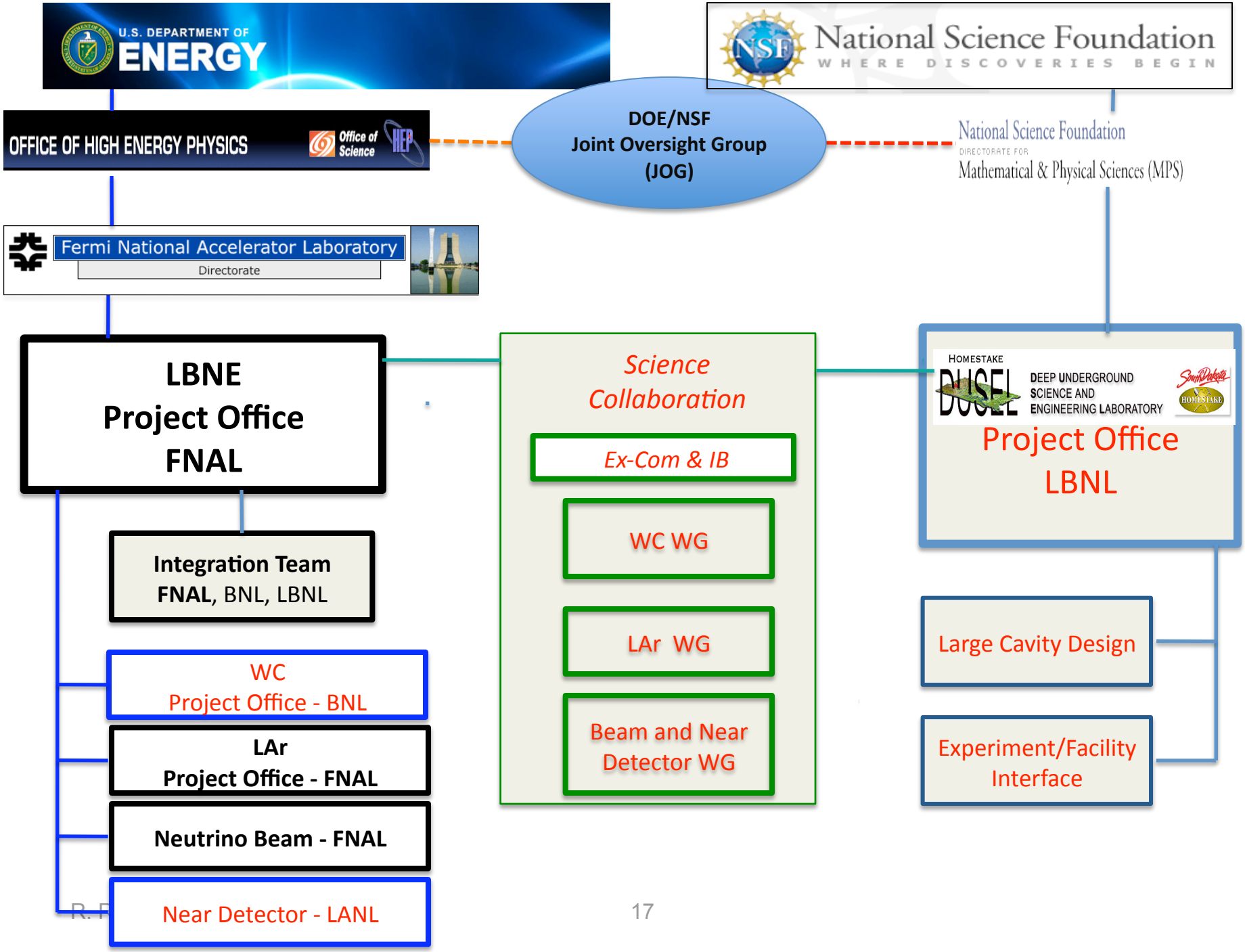
U.S. DEPARTMENT OF ENERGY
National Science Foundation
WHERE DISCOVERIES BEGIN
OFFICE OF HIGH ENERGY PHYSICS
Office of Science
HEP
DOE/NSF
Joint Oversight Group
(JOG)
National Science Foundation
DIRECTORATE FOR
Mathematical & Physical Sciences (MPS)
Fermi National Accelerator Laboratory
Directorate
LBNE
Project Office
FNAL
Science
Collaboration
Ex-Com & IB
WC WG
LAr WG
Beam and Near
Detector WG
HOMESTAKE
DUSEL
DEEP UNDERGROUND
SCIENCE AND
ENGINEERING LABORATORY
Project Office
LBNL
Integration Team
FNAL, BNL, LBNL
WC
Project Office - BNL
LAr
Project Office - FNAL
Neutrino Beam - FNAL
Near Detector - LANL
Large Cavity Design
Experiment/Facility
Interface

LBNE Target R&D/Conceptual Design Activities and Opportunities

An engineer's perspective

P. Hurh

9/9/09

2 MW Target Challenges

- Heat removal
- Radiation damage

Initial collaboration with ANL

- Thermal shock (stress waves)
- Spatial constraints
- Oxidation
- Residual radiation
- Physics optimization

Other Target Hall Issues

- Remote stripline connection (ORNL, RAL, ANL)
- Radioactive component handling (ORNL)
- Radiation accelerated corrosion (ANL, BNL)
- Air versus water cooled decay pipe (ANL, ORNL)
- High current horn conceptual design (??)
- Water cooled chase steel shielding (ANL, ORNL)
- Heat pipe target cooling (IHEP)

Possible additional topics for engineering collaboration

Conclusion

- The successful collaboration between FNAL and ANL on MINOS and NOvA leads to a natural desire to continue the collaboration on LBNE
- Numerous engineering topics for the neutrino beam design have been identified where additional collaboration would be desirable
- ANL and U of C are members of the LBNE Science Collaboration – growth of the physics groups at all institutions, FNAL, ANL and UC would facilitate expanding the engineering collaborations